300 Series Rocker Switch

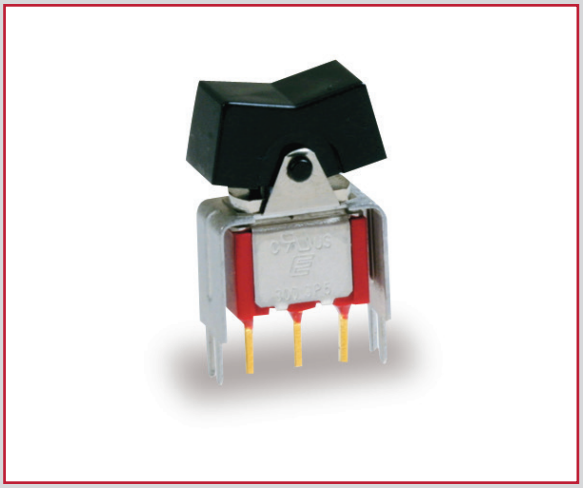

Applications / Markets


Testing Equipment

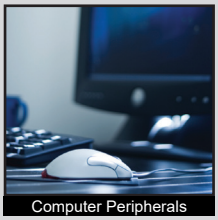
Computer Peripherals


Consumer Electronics


Telecommunication


Instrumentation


Medical Equipment

RoHS

Specifications

Contact Rating:
Silver: 5A @ 120VAC or 28 VDC
2A @ 250VAC
Gold: 0.4VA @ 20V Max (AC or DC)
Electrical Life: 6,000 make or break cycles at full load
Mechanical Life: 40,000 make or break cycles
Contact Resistance: 10mΩ max. initial @ 2-4VDC,
100mA for both silver and gold plated contacts
Insulation Resistance: 1,000MΩ min.
Dielectric Strength: 1,000 V RMS @ sea level
Operating Temperature: -40°C to 85°C

Features & Benefits

- **Multiple rocker & paddle options**
- **Up to 4 poles**
- **Multiple termination options**
- **Snap-in panel mount option available**

Part Number Configurator

Series
300

Model No.
SP1
SP2
SP3
SP4
SP5
DP1
DP2
DP3
DP4
DP5
DP6
DP7
DP8
3P1
3P2
3P3
3P4
3P5
4P1
4P2
4P3
4P4
4P5
4P6

Acuator
Panel Mount
R1
R2
R3
R4
R6*
R7*
R8*
R9*
R11
R16

*Snap-in Panel Mount

PC Mount
J1
J2
J3
J4
J5
J6

Actuator Color**
Panel Mount
BLK - Black
WHT - White
RED - Red
YEL - Yellow
GRY - Gray

PC Mount
BLK - Black
WHT - White
RED - Red
YEL - Yellow
GRY - Gray

Termination
Panel Mount
M1
M3
M51
M52
M53
M54

PC Mount
M2
M6
M7
VS2
VS3
VS4
VS5
M61
VS21

Contact Material
Q - Silver
R - Gold

Seal
E - Epoxy sealed at base of terminal

Frame Color
(R6, R7 Only)
BLK - Black
WHT - White
RED - Red
YEL - Yellow
GRY - Gray

Specifications subject to change without notice 5.16.2023

Switch Functions

( ) = momentary

Single Pole - SP

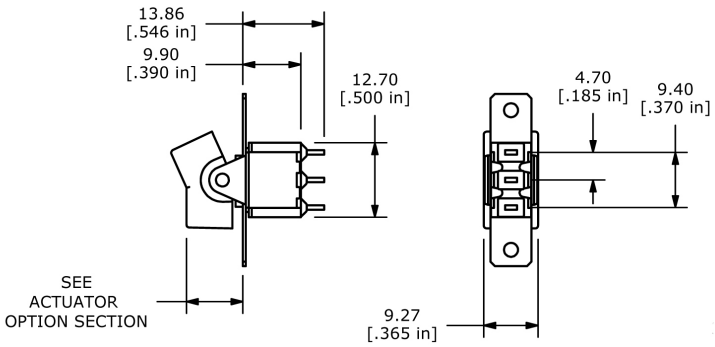

MODEL NO.	POS. 1	POS. 2	POS. 3
SP1	ON	NONE	ON
SP2	ON	NONE	(ON)
SP3	ON	OFF	ON
SP4	(ON)	OFF	(ON)
SP5	ON	OFF	(ON)
Term. Comm.	2-3	OPEN	2-1

Double Pole - DP

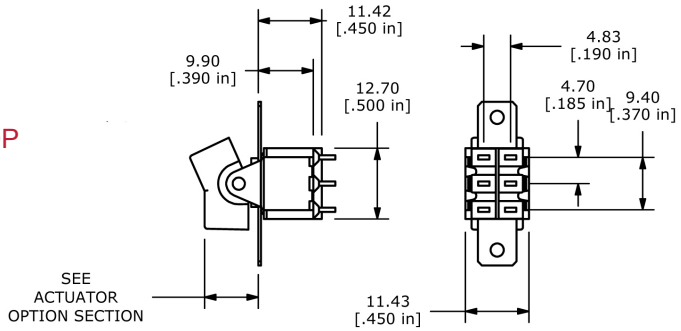

MODEL NO.	POS. 1	POS. 2	POS. 3
DP1	ON	NONE	ON
DP2	ON	NONE	(ON)
DP3	ON	OFF	ON
DP4	(ON)	OFF	(ON)
DP5	ON	OFF	(ON)
DP7	ON	ON	(ON)
DP8	(ON)	ON	(ON)
Term. Comm.	2-3, 5-6	OPEN	2-1, 5-4
DP6	ON	ON	ON
Term. Comm.	2-3, 5-6	2-3, 5-4	2-1, 5-4

Triple Pole - 3P

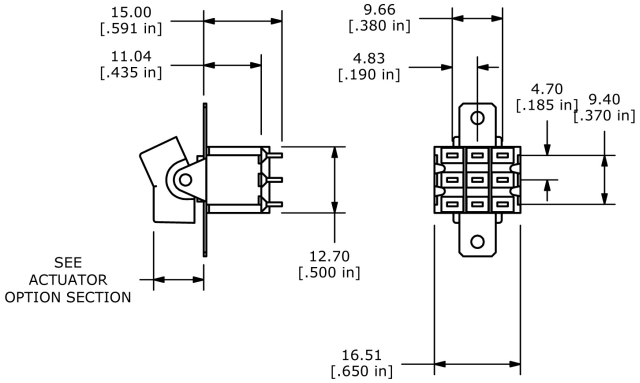

MODEL NO.	POS. 1	POS. 2	POS. 3
3P1	ON	NONE	ON
3P2	ON	NONE	(ON)
3P3	ON	OFF	ON
3P4	(ON)	OFF	(ON)
3P5	ON	OFF	(ON)
Term. Comm.	2-3, 5-6, 8-9	OPEN	2-1, 5-4, 8-7

Four Pole - 4P

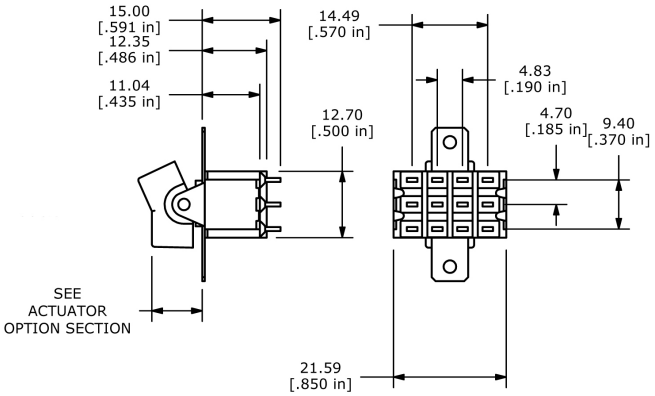

MODEL NO.	POS. 1	POS. 2	POS. 3
4P1	ON	NONE	ON
4P2	ON	NONE	(ON)
4P3	ON	OFF	ON
4P4	(ON)	OFF	(ON)
4P5	ON	OFF	(ON)
Term. Comm.	2-3, 5-6, 8-9, 11-12	OPEN	2-1, 5-4, 8-7, 11-10
4P6	ON	ON	ON
Term. Comm.	2-3, 5-6, 8-9, 11-12	2-3, 5-4, 8-9, 11-10	2-1, 5-4, 8-7, 11-10

Panel Mount Actuator

R1 Actuator

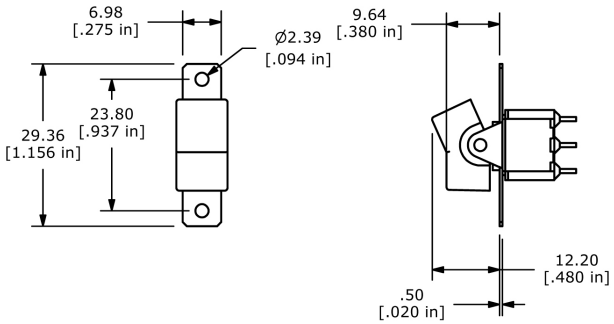

R2 Actuator

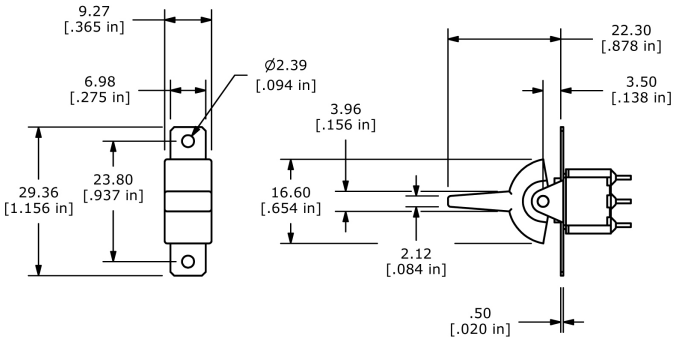

R3 Actuator

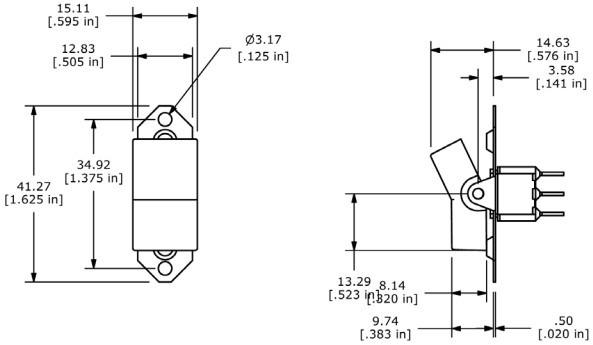

R4 Actuator

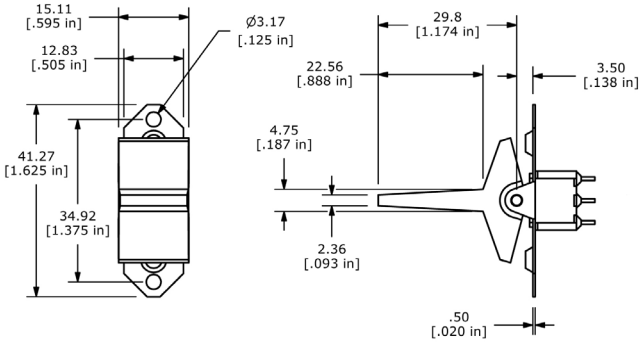

R11 Actuator

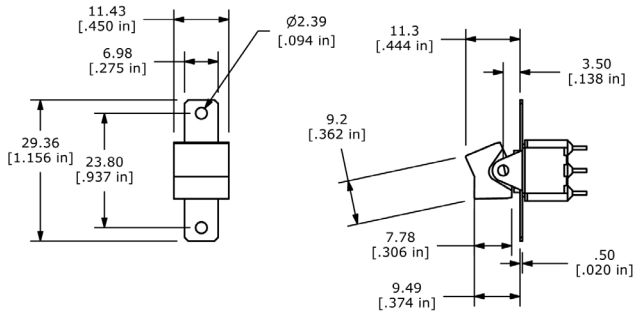

R16 Actuator

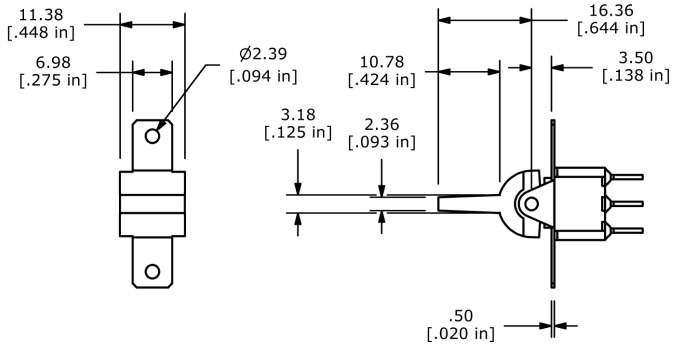

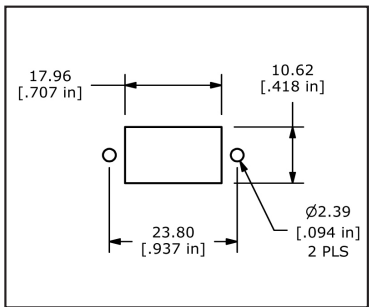

R1 & R2 Mounting

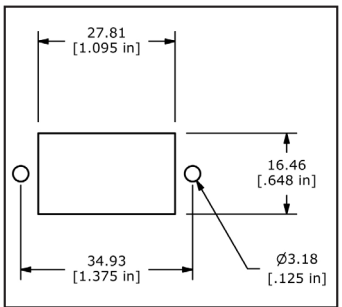

R3 & R4 Mounting

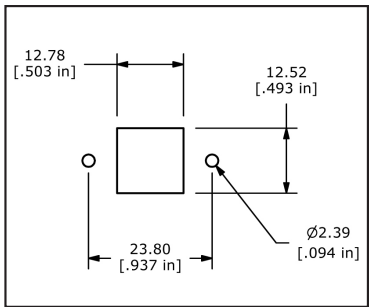

R11 Mounting

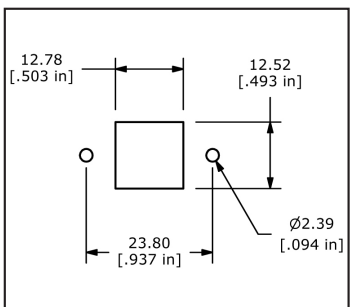

R16 Mounting

Snap-in Panel Mount Actuator

R6 Actuator

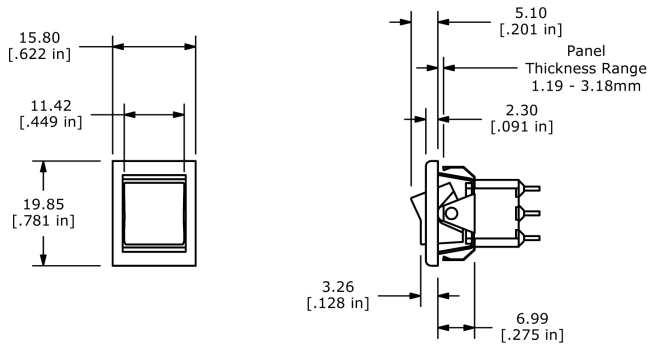

R7 Actuator

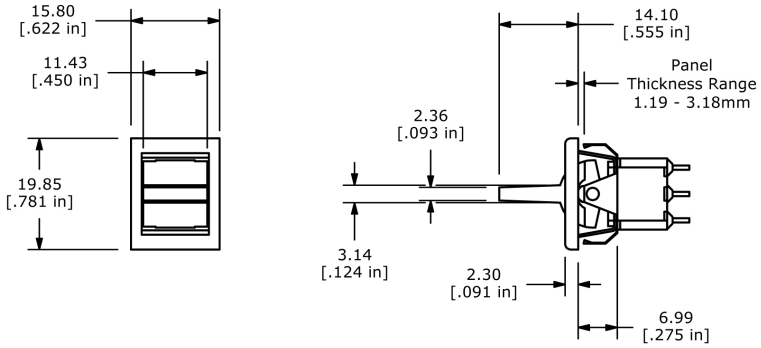

R8 Actuator

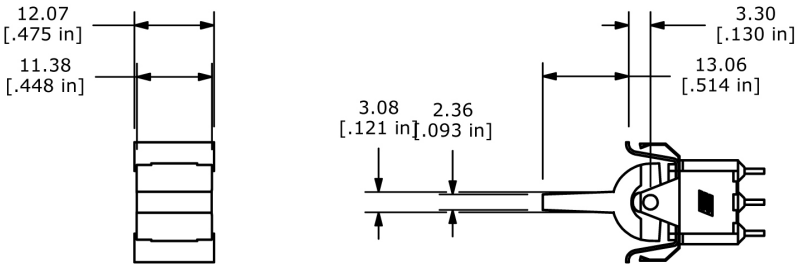

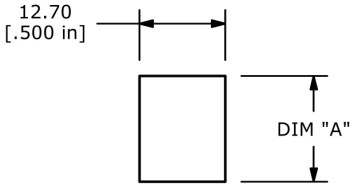

R9 Actuator

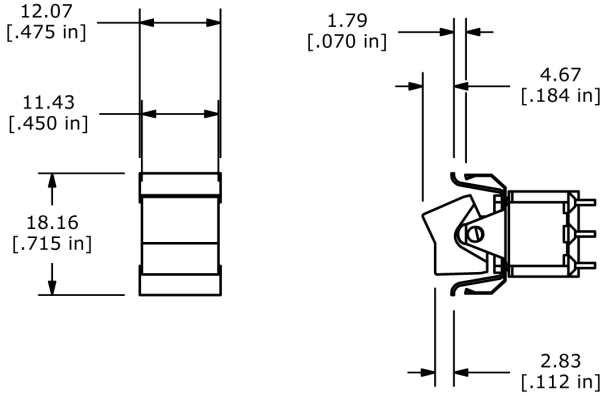

ACTUATOR OPTION	PANEL THICKNESS	DIM "A"
R6 or R7	1.19-1.51 [.047-.060]	15.70 [.619]
R6 or R7	1.52-3.18 [.061-.125]	15.85 [.624]
R8 or R9	1.19-2.29 [.047-.090]	15.70 [.619]
R8 or R9	2.30-3.18 [.091-.125]	15.85 [.624]

PC Mount Actuator

J1 Actuator

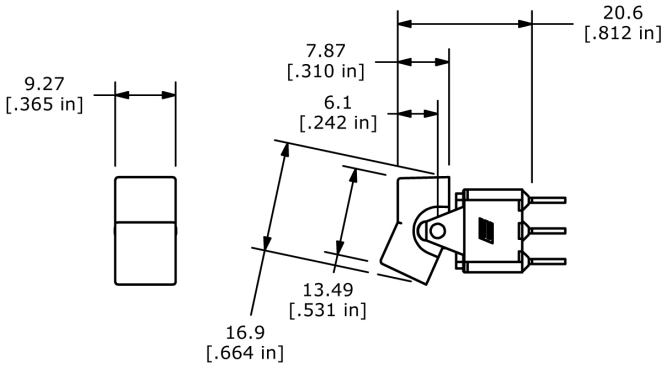

J2 Actuator

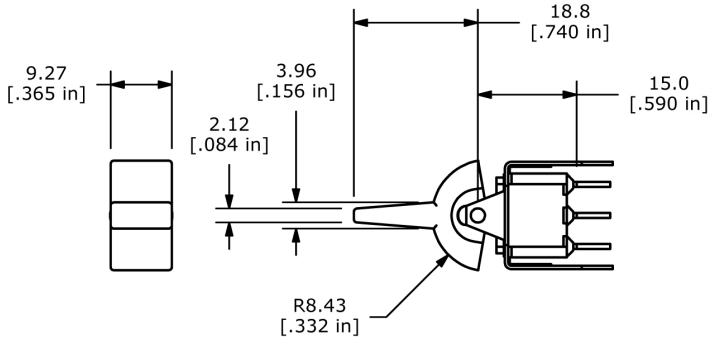

J3 Actuator

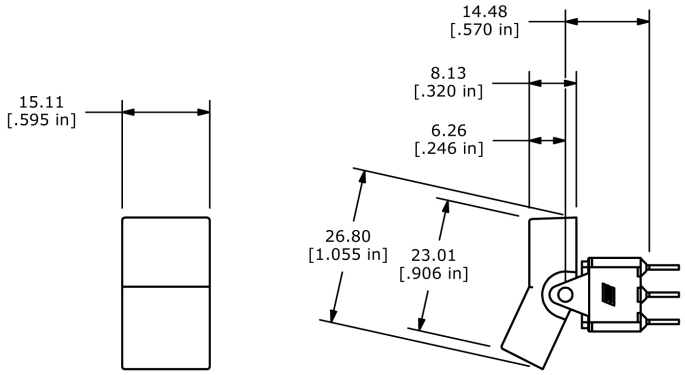

J4 Actuator

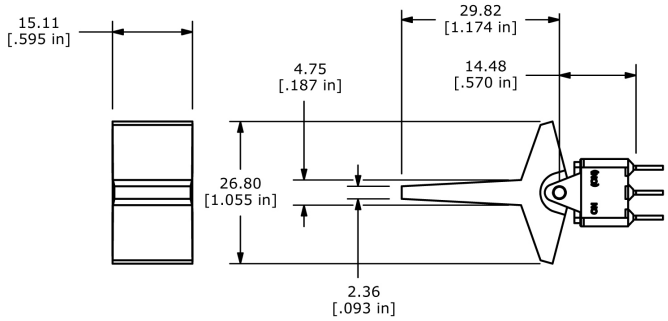

J5 Actuator

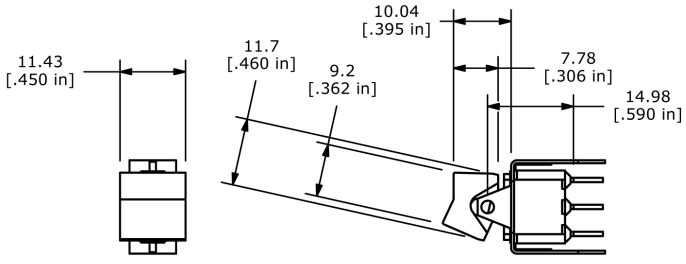

J6 Actuator

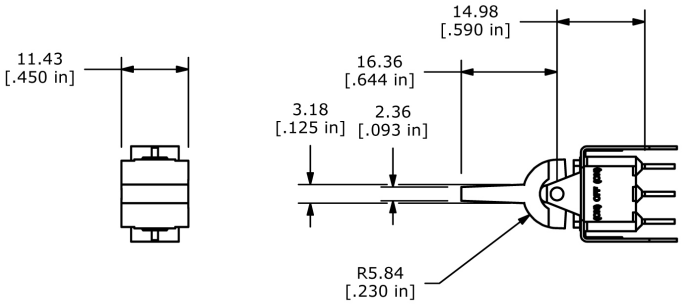

Panel Mount Termination

M1 Termination

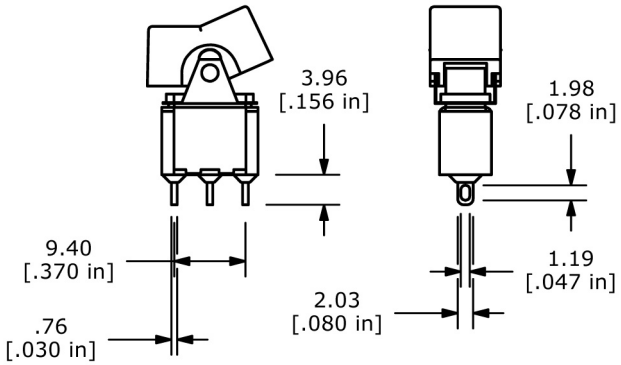

See Switch Function details (page 3) for complete terminal spacing dimensions for DP, 3P, and 4P switch models.

M3 Termination

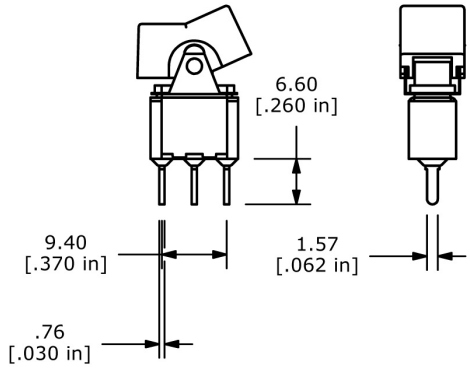

M5 Termination

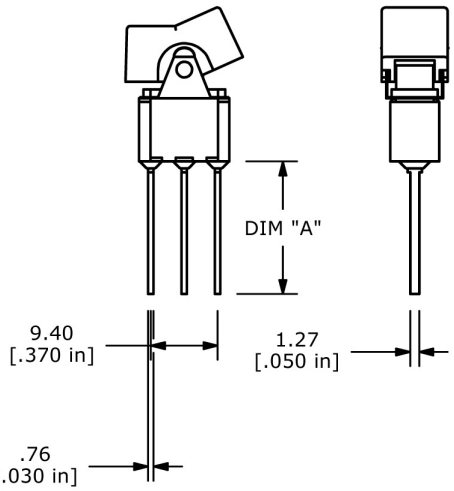

OPTION	DIM "A"
M51	18.70 [.736]
M52	24.20 [.953]
M53	10.55 [.415]
M54	26.97 [1.062]

PC Mount M2 Termination

M2 Termination - SP

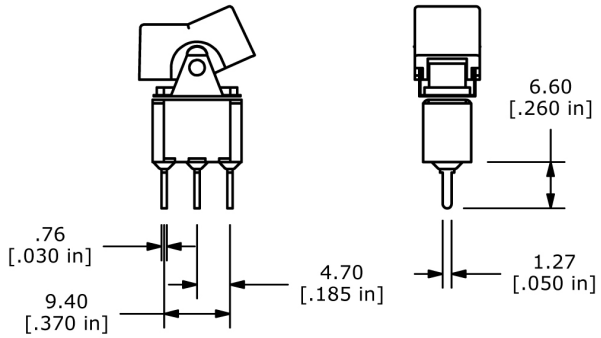

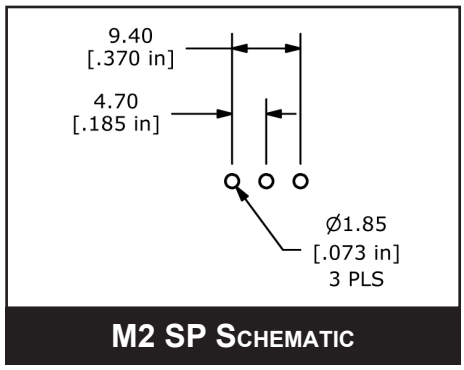

M2 SP Schematic

M2 Termination - DP

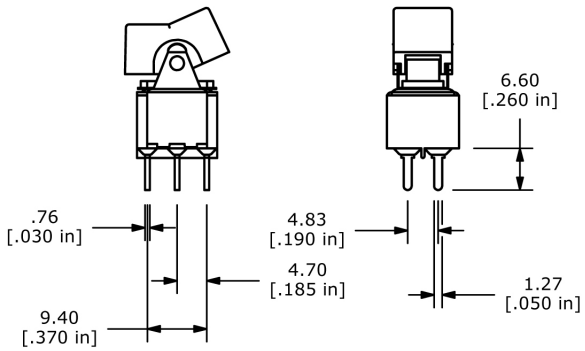

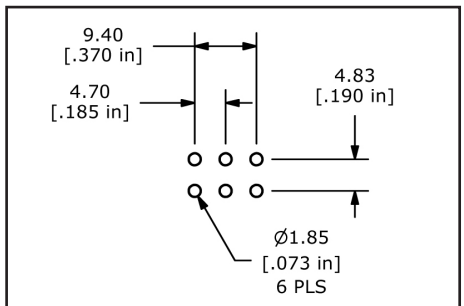

M2 DP Schematic

M2 Termination - 3P

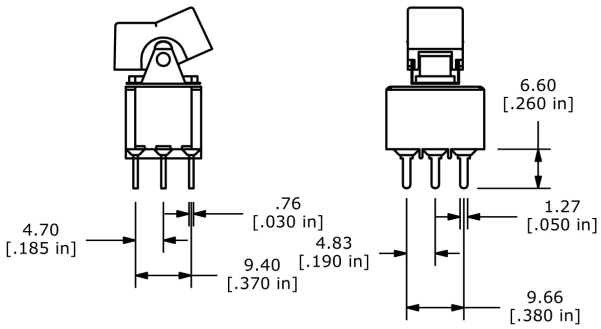

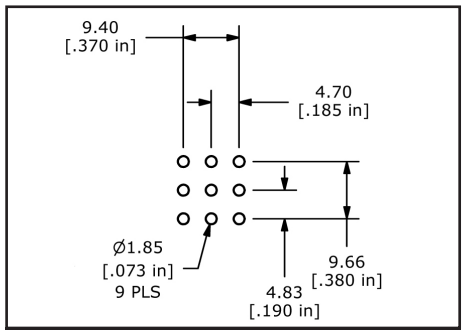

M2 3P Schematic

M2 Termination - 4P

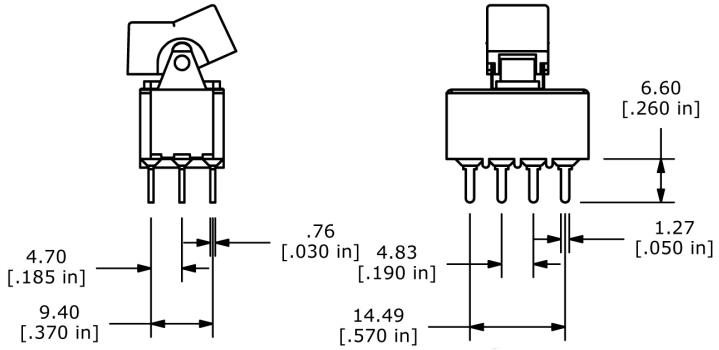

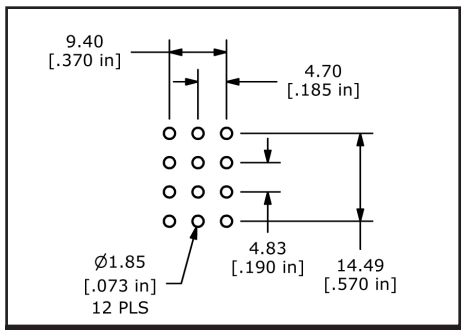

M2 4P Schematic

PC Mount M6 Termination

M6 Termination - SP

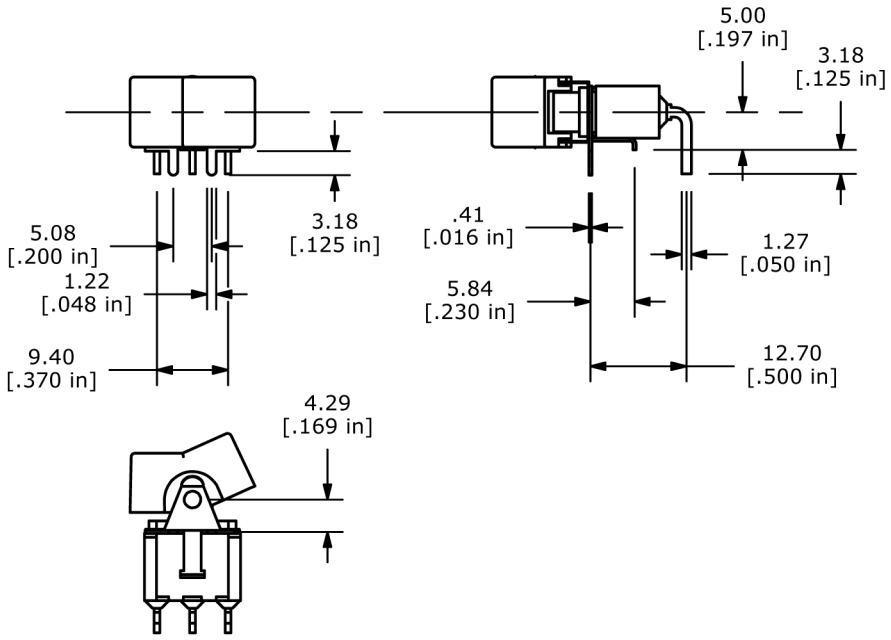

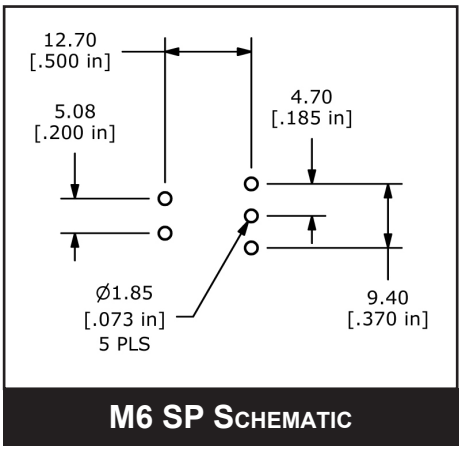

M6 SP Schematic

M6 Termination - DP

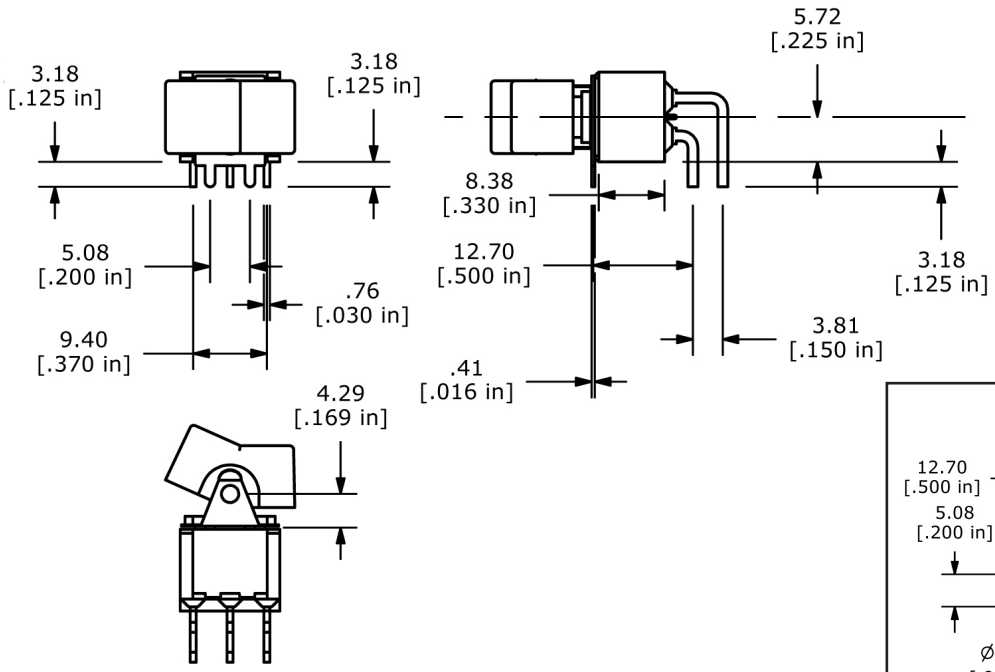

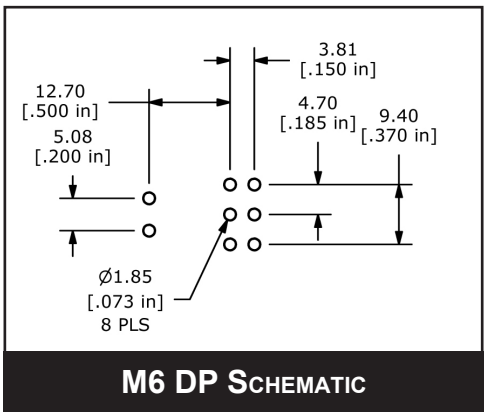

M6 DP Schematic

PC Mount M6 Termination

M6 Termination - 3P

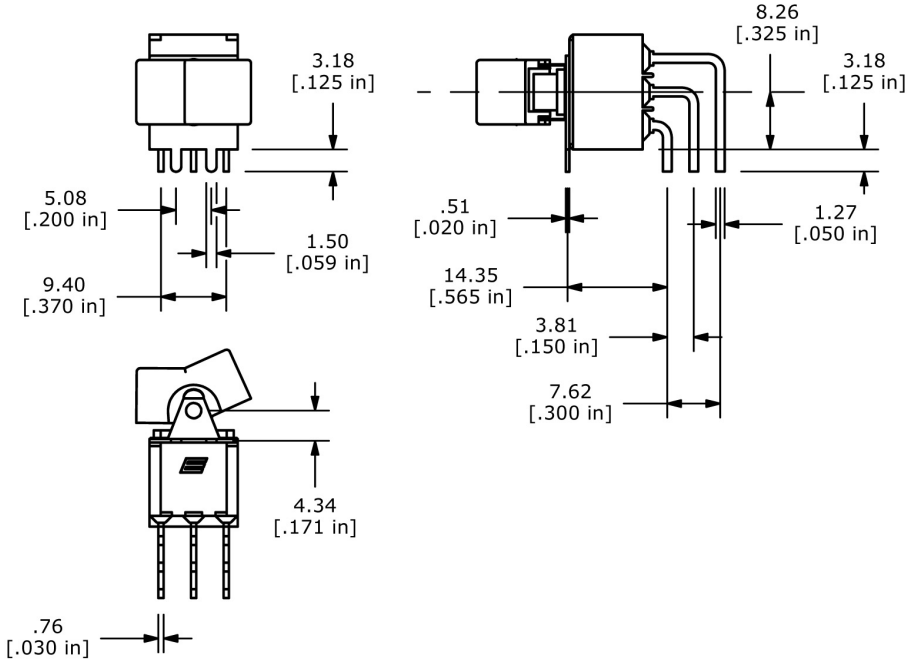

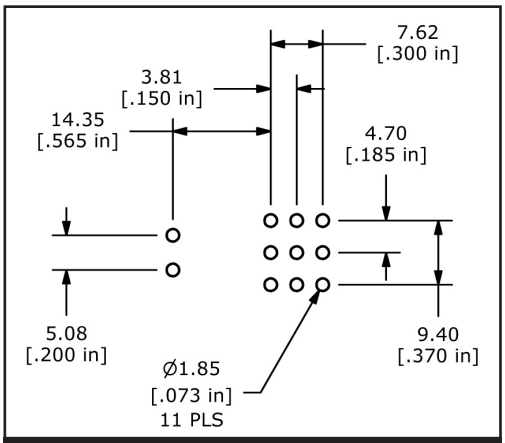

M6 3P Schematic

M6 Termination - 4P

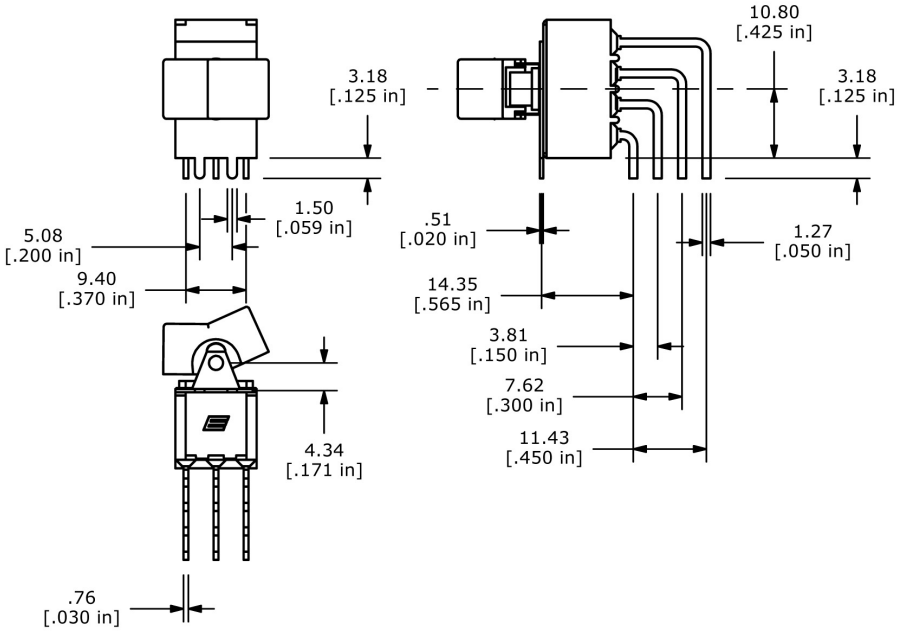

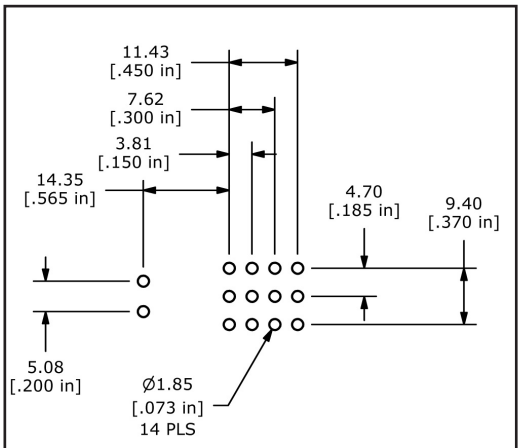

M6 4P Schematic

PC Mount M7 Termination

M7 Termination - SP

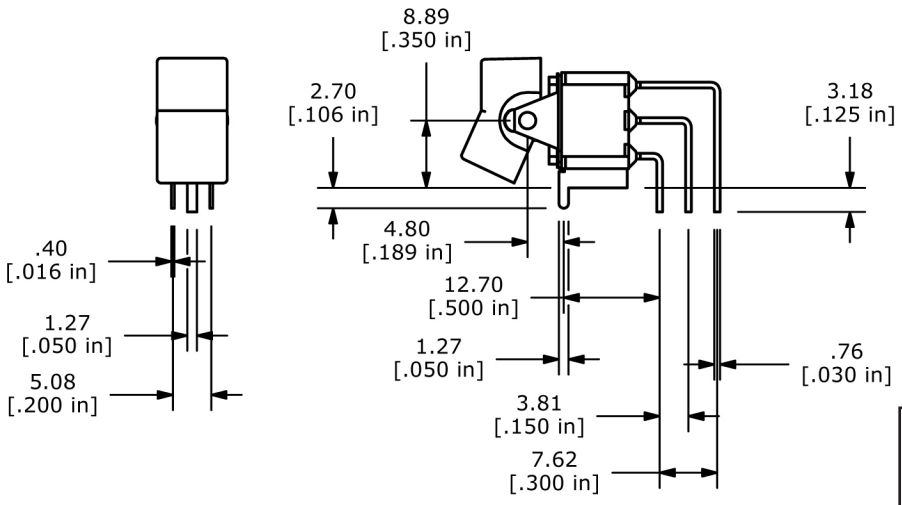

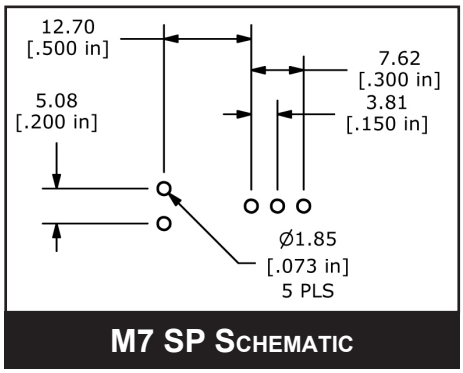

M7 SP Schematic

M7 Termination - DP

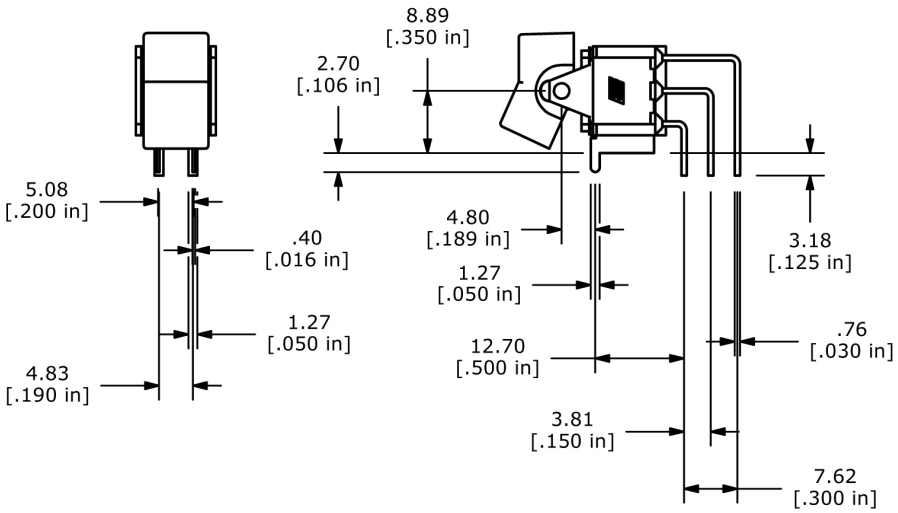

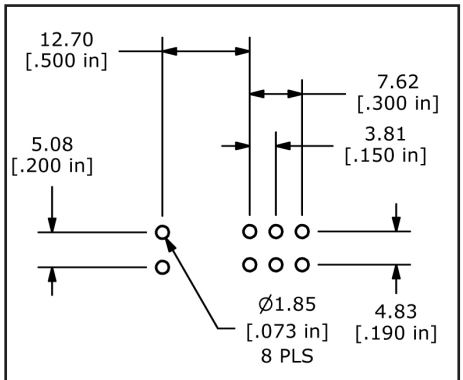

M7 DP Schematic

PC Mount M7 Termination Options

M7 Termination - 3P

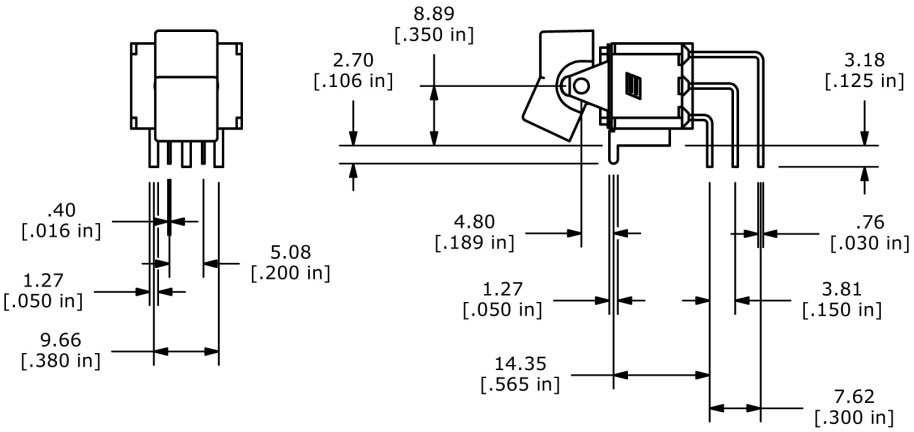

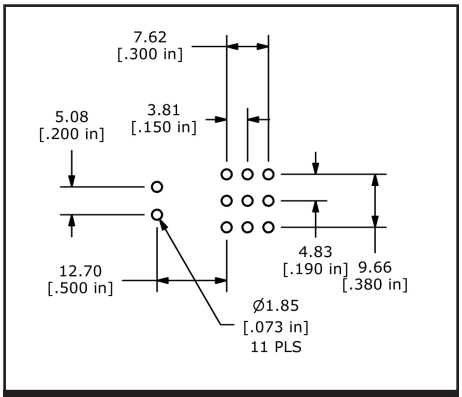

M7 3P Schematic

M7 Termination - 4P

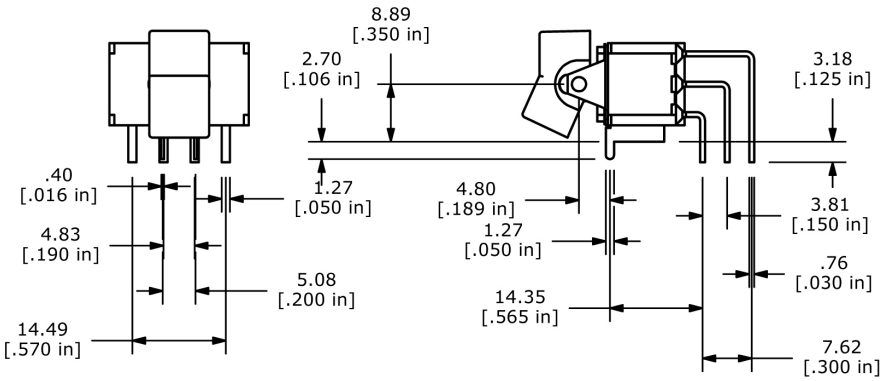

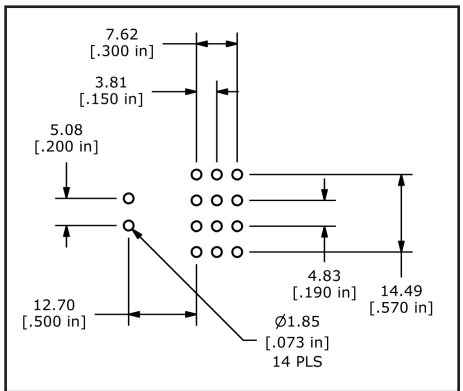

M7 4P Schematic

PC Mount VS2-VS3 Termination

VS2-VS3 Termination - SP

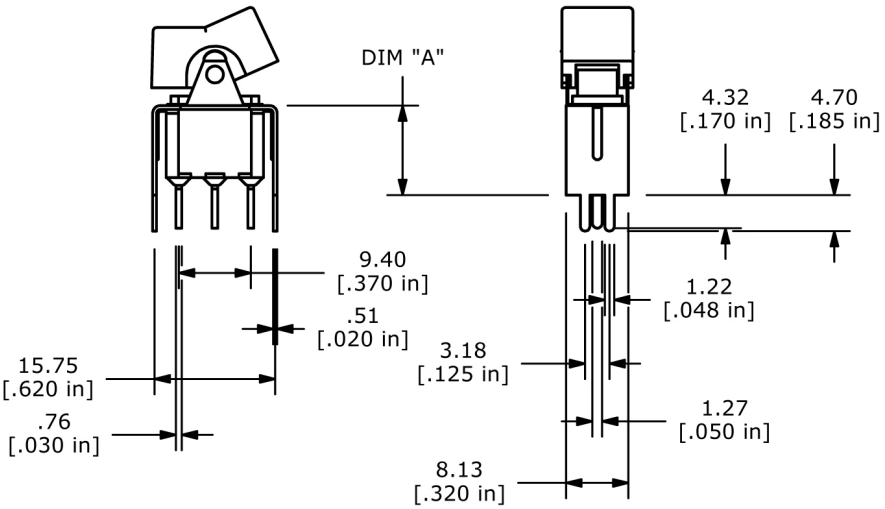

OPTION	DIM "A"
VS2	11.68 [.460]
VS3	16.00 [.630]

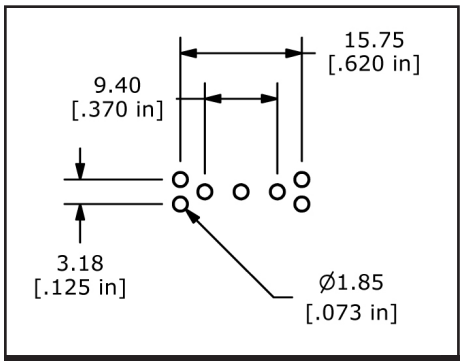

VS2-VS3 SP Schematic

VS2-VS3 Termination - DP

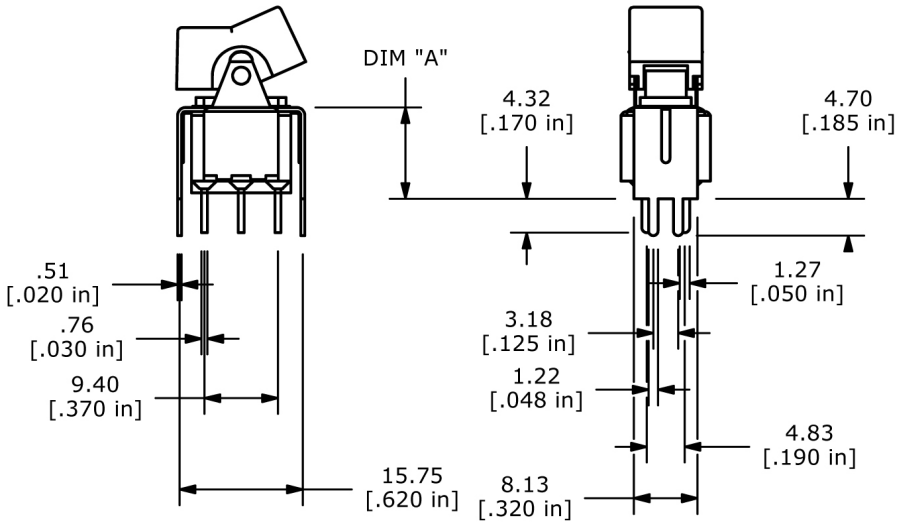

OPTION	DIM "A"
VS2	11.68 [.460]
VS3	16.00 [.630]

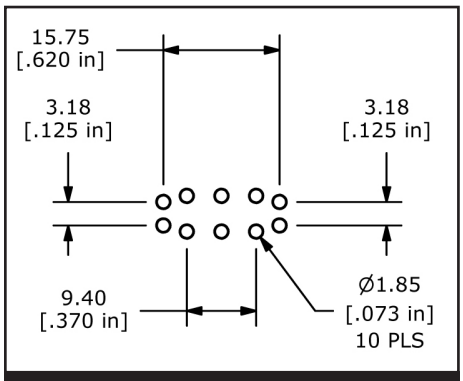

VS2-VS3 DP Schematic

PC Mount VS2-VS3 Termination

VS2-VS3 Termination - 3P

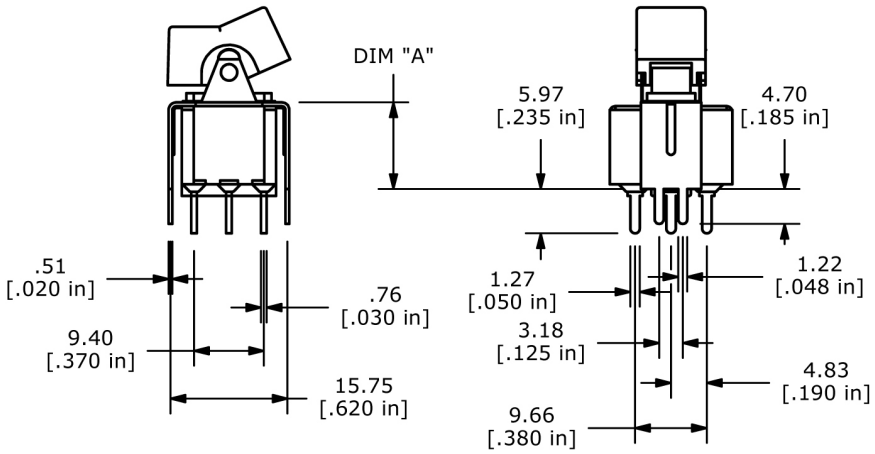

OPTION	DIM "A"
VS2	11.68 [.460]
VS3	16.00 [.630]

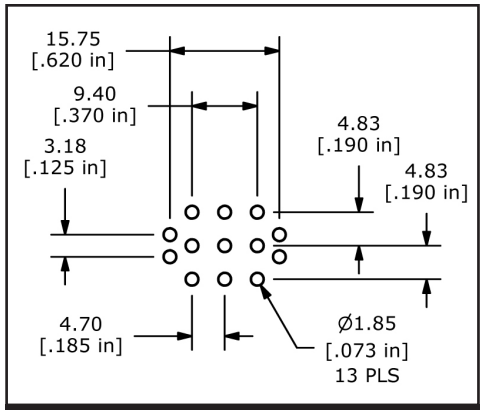

VS2-VS3 3P Schematic

VS2-VS3 Termination - 4P

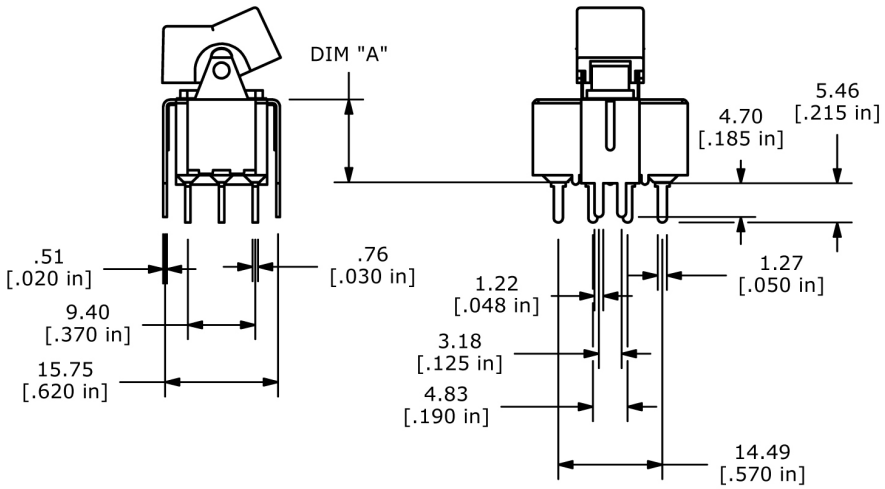

OPTION	DIM "A"
VS2	11.68 [.460]
VS3	16.00 [.630]

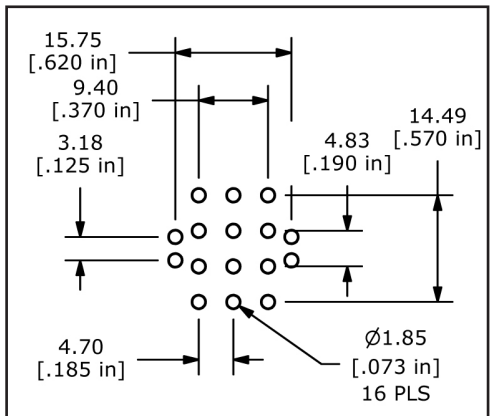

VS2-VS3 4P Schematic

PC Mount VS4-VS5 Termination

VS4-VS5 Termination - SP

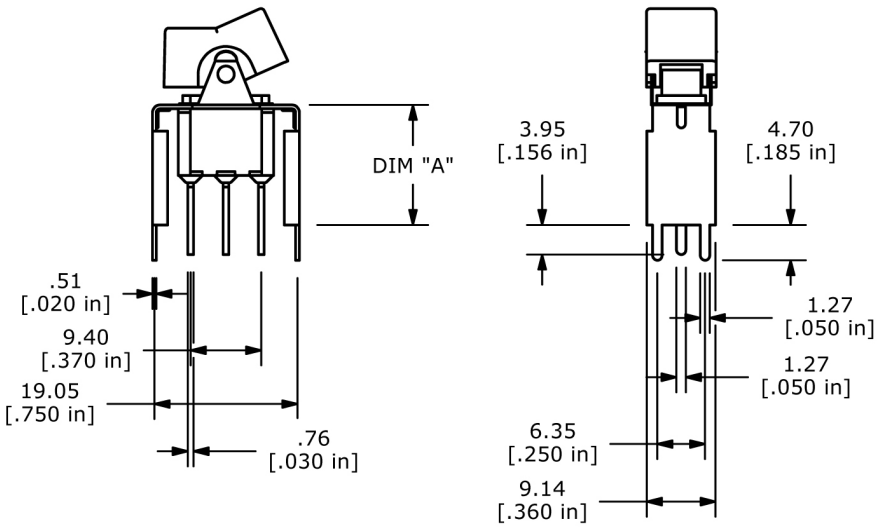

OPTION	DIM "A"
VS4	11.68 [.460]
VS5	16.00 [.630]

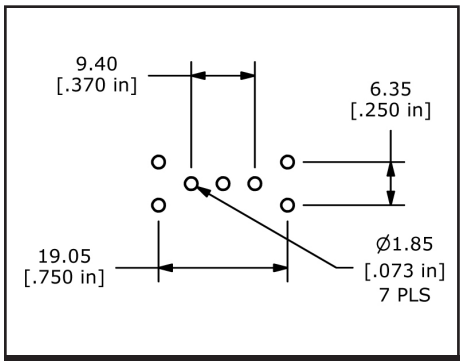

VS4-VS5 SP Schematic

VS4-VS5 Termination - DP

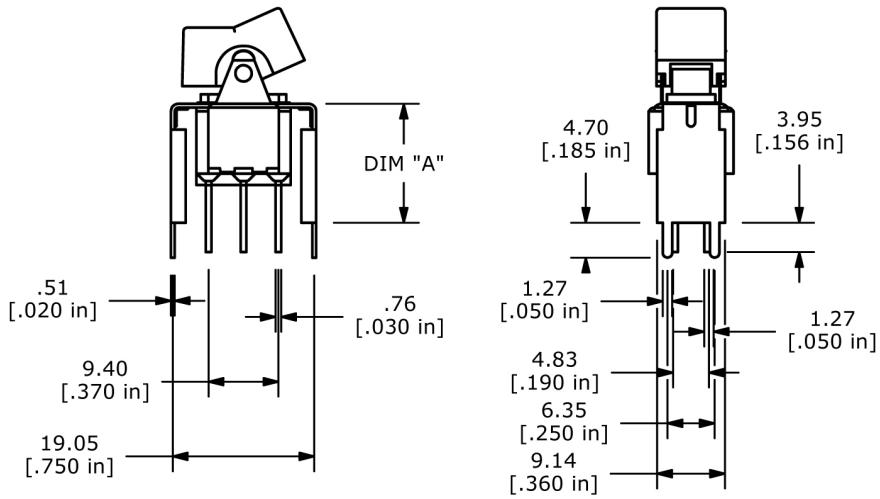

OPTION	DIM "A"
VS4	11.68 [.460]
VS5	16.00 [.630]

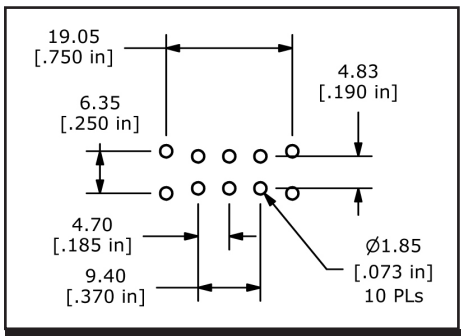

VS4-VS5 DP Schematic

PC Mount VS4-VS5 Termination

VS4-VS5 Termination - 3P

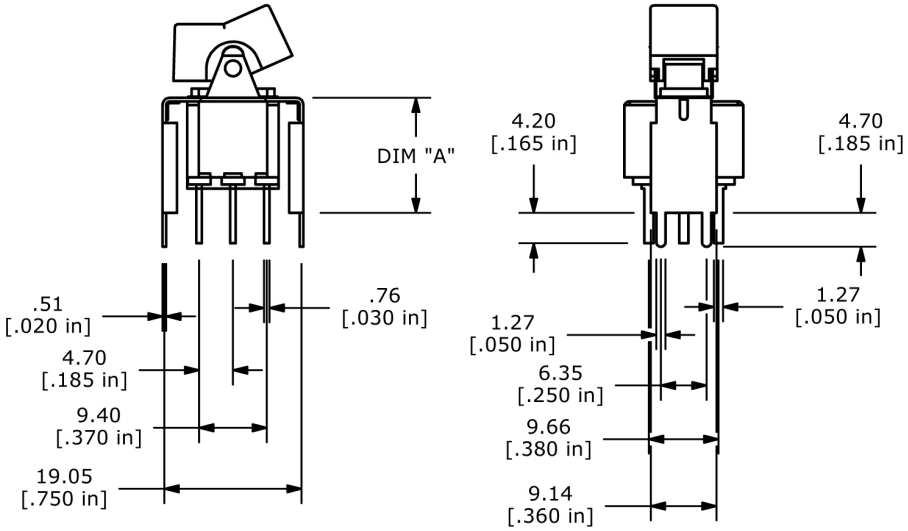

OPTION	DIM "A"
VS4	11.68 [.460]
VS5	16.00 [.630]

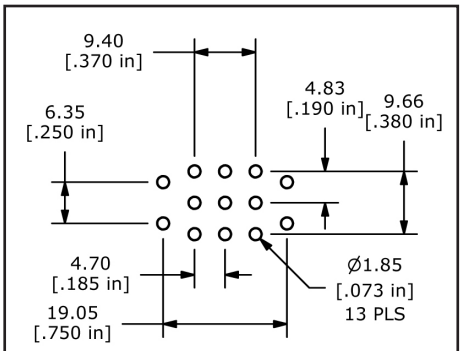

VS4-VS5 3P Schematic

VS4-VS5 Termination - 4P

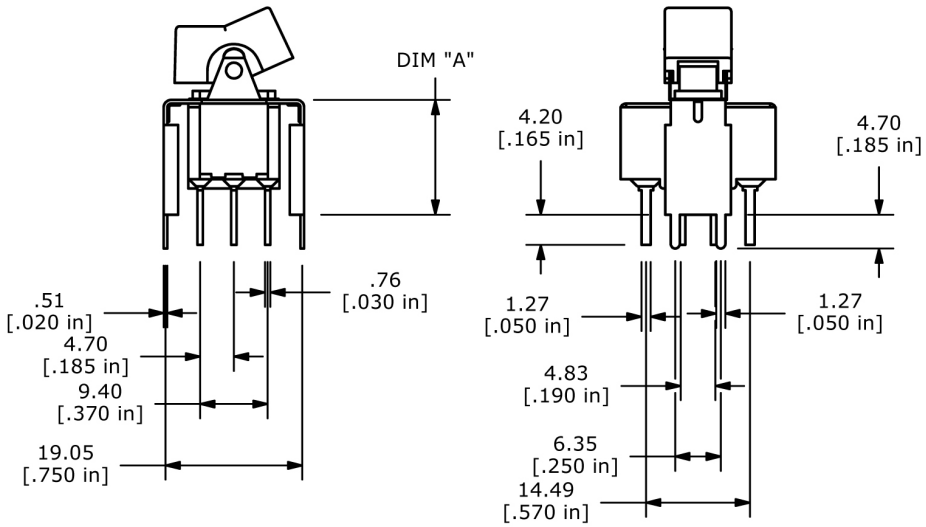

OPTION	DIM "A"
VS4	11.68 [.460]
VS5	16.00 [.630]

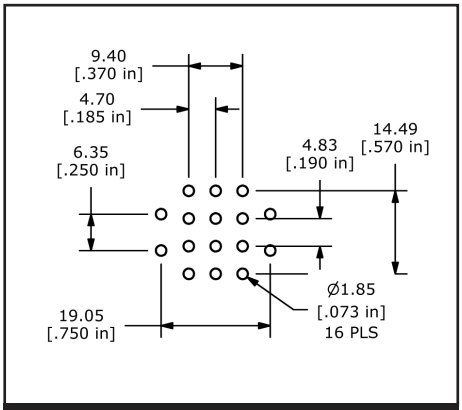

VS4-VS5 4P Schematic