PA4 Series

High Amperage | Illuminated | Water Protection | High Temperature | Front Panel Mount | RoHS

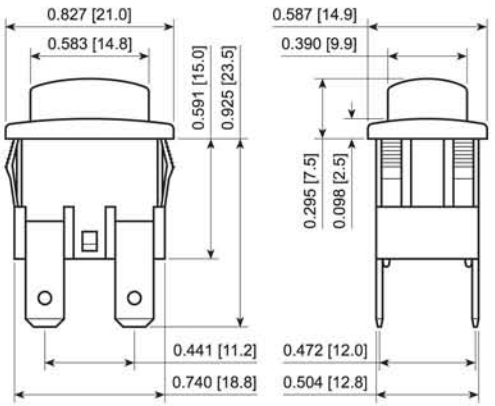

Terminal Options

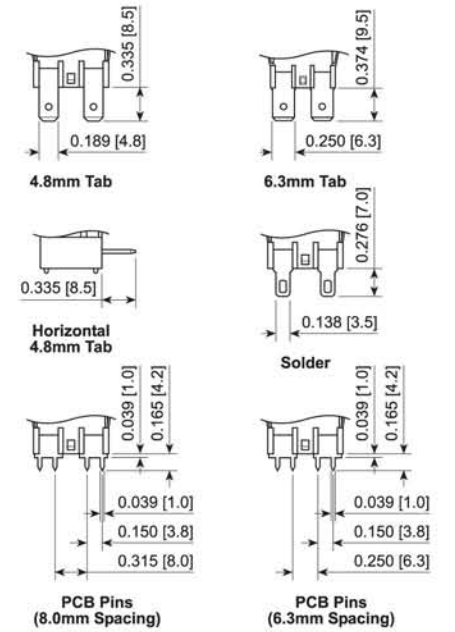

Mounting Options

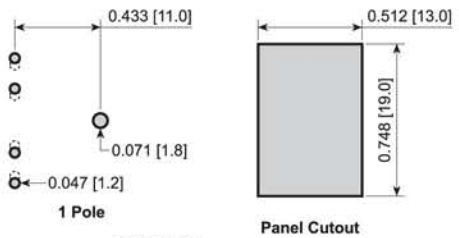

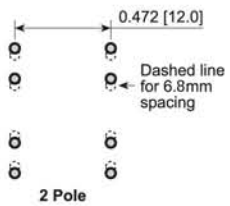

Illumination Options



Actuator Options

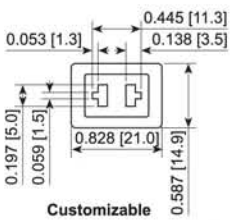

Water Protection Options

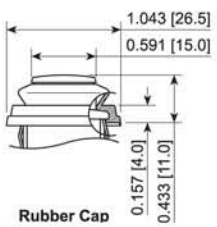

FEATURES:

- Durable, Robust and Economical
- Popular 13mm x 19mm Cutout
- High Power Ratings
- Standard and Water-resistant Versions
- Illuminated Versions

SPECIFICATIONS:

Rating: *Rating Option C:*
16A 125/250VAC [UR, cUR]
16(4)A 250V~ 1E4 T125/55 [ENEC]

Rating Option J:
16A 125/250VAC [UR, cUR]
16(8)A 250V~ 1E4 T125/55 [ENEC]

Temperature: -20°C to 65°C [UR, cUR]
-20°C to 125°C [ENEC]
Electrical Life: 10,000 Cycles
Contact Resistance: 20mΩ Min. at 1A 5VDC
Insulation Resistance: 100MΩ Min. at 500VDC
Dielectric Strength: 1,000VAC for 1 Minute

MATERIALS:

Upper Body: Polyamide 6/6, UL94 V-2
Lower Body: PBT, UL94 V-2
Actuator: Polyamide 6/6, UL94 V-2
Polycarbonate, UL94 V-2
Contacts: Silver Alloy
Terminals: Silver Plated Copper



PA4R11C1000-116

PA411C1100



PA421C4000-124



PA431C1700



PA411C1900

Series	Terminal	Function	Rating	Body Color	Actuator Color	Marking Color	Marking Type	–	Lens Style	Lens Color	Lamp Voltage
PA4 - Std. Version **PA4R** - Rubber Cap **PA4C** - Customizable	**1** - 4.8mm Tab **2** - Solder **3** - PCB Pins (8.0mm) **4** - PCB Pins (6.8mm) **5** - Horizontal 4.8mm Tabs **6** - 6.3mm Tab	*1 Pole:* **1** - Off-On **4** - Off-(On) *2 Pole:* **2** - Off-On **E** - Off-(On)	**C** - 16A 125/250VAC [UL, CSA] 16(4)A 250V~ [ENEC] **J** - 16A 125/250VAC [UL, CSA] 16(8)A 250V~ [ENEC]	**1** - Black **2** - White **4** - Grey **9** - Red	**0** - Full Illum. **1** - Black **2** - White **4** - Grey **5** - Orange **7** - Blue **8** - Green **9** - Red	**0** - None **1** - Black **2** - White **8** - Red	**0** - None **1** - Power Symbol Vert. **2** - Power Symbol Horz. **3** - Reset Symbol Vert. **4** - Reset Symbol Horz. **5** - POWER Vert. **6** - POWER Horz. **7** - RESET Vert. **8** - RESET Horz.	–	**1** - Full	**0** - Clear **1** - Red **2** - Amber **3** - Green **4** - Blue **5** - Yellow	**3** - 6V **4** - 12V **5** - 24V **6** - 125V **7** - 250V

Custom Colors and Markings Available Upon Request — *For Illuminated Switches Only*

EXAMPLE PART NUMBERS:

PA411C1100 — 1P Off-On
Black Body/Actuator, 4.8mm Tab

PA414C1100 — 1P Off-(On)
Black Body/Actuator, 4.8mm Tab

PA412C1100-116 — 2P Off-On
Black Body, Red Actuator, 125V, 4.8mm Tab

PA421C1100 — 1P Off-On
Black Body/Actuator, Solder Tab

PUSHBUTTON

SPECIFICATIONS SUBJECT TO CHANGE WITHOUT NOTICE