# E-T-A Thermal-Magnetic Circuit Breakers 3300/3400

## Description

Single pole thermal-magnetic circuit breakers with tease-free, trip-free, press-to-reset, snap action mechanism (R-type TM CBE to EN 60934; M-type with manual release (-H). Available with fast acting and standard magnetic tripping characteristics - types 3300 and 3400 - both with threadneck panel mounting. Options include auxiliary contacts, a separate shunt tap terminal (-A3), and pull-to-trip manual release (-H). Approved to CBE standard EN 60934 (IEC 60934).

## Typical applications

Control systems, instrumentation, medical equipment, machine tools, robotics.

## Ordering information 3300

**Type No.**
**3300** fast acting
- **Mounting**
  - **iG2** moulded threadneck M12x1, > 5 pcs: hex nut and knurled nut bulk shipped
    - **Terminal design**
      - **P10** blade terminals tin-plated DIN 46244-A6.3-0.8
        - **Current ratings**
          - **0.05...16 A**

**3300 - iG2 - P10 -10 A**

## Ordering information 3400

**Type No.**
**3400** standard delay
- **Mounting**
  - **iG2** moulded threadneck M12x1 (bulk-shipped), not with -H;
  - **...** leave blank for metal threadneck, required for -H
    - **Terminal design**
      - **P10** blade terminals 6.3-0.8 (QC .250)
      - **K20** screw terminals M3.5x5.5 with clamp (not for -Si and -A3)
        - **Shunt terminal (optional)**
          - **A3** same as main terminals, up to $I_N$=7 A max. load 5 A
            - **Manual release (optional)**
              - **H** manual release facility (pull), without reinforced insulation in operating area, for M12x1 metal threadneck only. Metal threadneck version for -H is not approved.
                - **Auxiliary contacts (optional)**
                  - **Si** with silver-plated solder terminals (N/O and N/C)
                    - **Current ratings**
                      - **0.05...16 A**

**3400 - iG2 - P10 - .. - .. - Si -10 A** ordering example, without manual release and with moulded threadneck

**3400 - ... - P10 - .. - H - Si - 10 A** ordering example, with manual release and metal threadneck

The exact part number required can be built up from the table of choices shown above. Ordering references for optional features should be omitted if not required. Please be informed that we have minimum ordering quantities to be observed.

## Approvals

| Authority | Standard | Rated voltage | Current ratings |
|---|---|---|---|
| VDE | IEC/EN 60934 | AC 240 V<br>DC 65 V | 0.05...16 A<br>0.05...16 A |
| UL | UL 1077<br>C22.2 No 235 | AC 250 V<br>DC 80 V | 0.05...16 A<br>0.05...16 A |
| CSA | C22.2 No 235 | AC 250 V<br>DC 80 V | 0.05...16 A<br>0.05...16 A |



**3300** fast acting

**3400** standard delay

## Technical data

**For further details please see: http://www.e-t-a.de/ti_e**

| | | |
|---|---|---|
| Voltage rating | AC 240 V, 50/60 Hz; DC 65 V<br>(UL: AC 250 V; DC 80 V) | |
| Current ratings | 0.05...16 A | |
| Auxiliary circuit | 1 A, AC 240 V / DC 65 V | |
| Typical life<br>with -H:<br><br>without -H: 0.05...8 A<br>> 8 A | <br>5,000 operations at 1 x $I_N$, inductive<br>5,000 operations at 2 x $I_N$, resistive<br>5,000 operations at 2 x $I_N$, inductive<br>1,500 operations at 2 x $I_N$, inductive | |
| Ambient temperature | -30...+60 °C (-22...+140 °F) | |
| Insulation co-ordination (IEC 60664 and 60664 A)<br>operating area | rated impulse withstand voltage<br>2.5 kV<br>reinforced insulation in operating area | pollution degree<br>2 |
| Dielectric strength (IEC 60664 and 60664A)<br>operating area<br>main circuit/aux. circuit<br>aux. circuit 4-5/6-7 | test voltage<br>AC 3,000 V double insulation<br>AC 1,500 V<br>AC 840 V | |
| Insulation resistance | > 100 MΩ (DC 500 V) | |
| Interrupting capacity $I_{cn}$ | 0.05...0.8 A<br>1...2 A<br>2.5...16 A | self-limiting<br>200 A<br>400 A |
| Interrupting capacity (UL 1077) | $I_N$<br>0.05...16 A<br>0.05...16 A | $U_N$<br>AC 250 V 1,000 A<br>DC 80 V 1,000 A |
| Degree of protection (IEC 60529/DIN 40050) | operating area IP40<br>terminal area IP00 | |
| Vibration | 5 g (57-500 Hz), ± 0.38 mm (10-57 Hz)<br>to IEC 60068-2-6, test Fc<br>10 frequency cycles/axis | |
| Shock | 25 g (11 ms) to IEC 60068-2-27, test Ea | |
| Corrosion | 96 hours at 5 % salt mist<br>to IEC 60068-2-11, test Ka | |
| Humidity | 240 hours at 95 % RH,<br>to IEC 60068-2-78, test Cab | |
| Mass | 3300: approx. 55 g<br>3400: approx. 50 g | |

## Dimensions

**-iG2-P10**

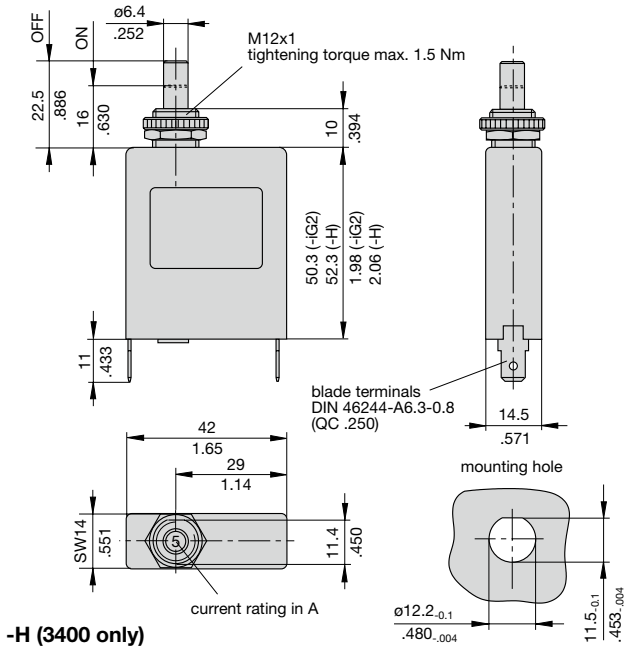


**-H (3400 only)**

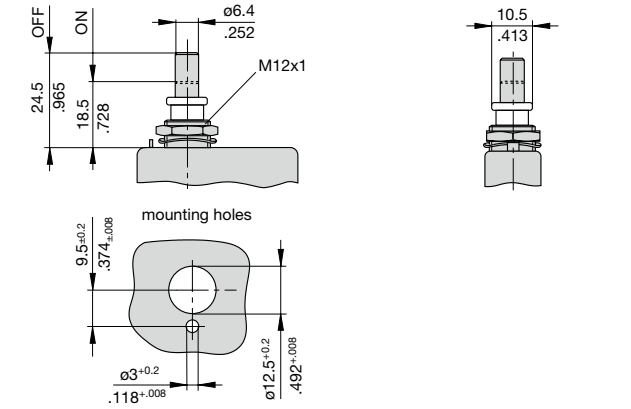


## Installation drawing

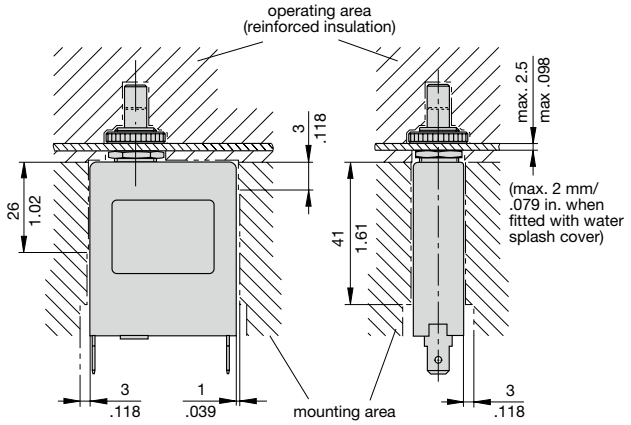


## Internal connection diagrams

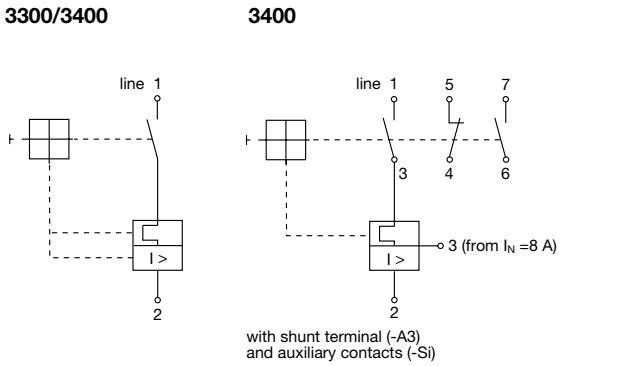


## Terminal design 3400

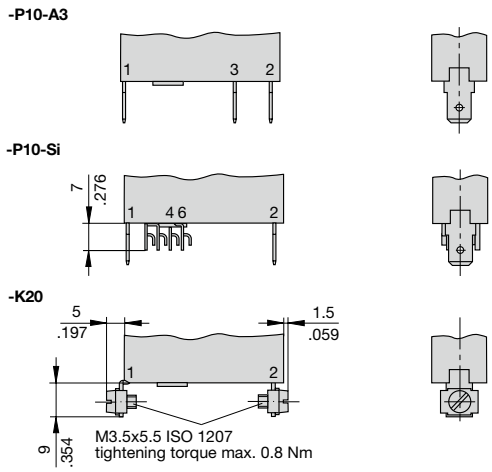


## Standard current ratings and typical internal resistance values

| Current ratings (A) | Internal resistance (Ω) | | Current ratings (A) | Internal resistance (Ω) | |
|---|---|---|---|---|---|
| | 3300 | 3400 | | 3300 | 3400 |
| 0.05 | 447 | 211 | 3 | 0.18 | 0.19 |
| 0.1 | 131 | 131 | 4 | 0.109 | 0.090 |
| 0.2 | 41 | 40 | 5 | 0.066 | 0.061 |
| 0.3 | 19.6 | 19.3 | 6 | 0.046 | 0.041 |
| 0.4 | 10.4 | 10.4 | 7 | 0.032 | 0.034 |
| 0.5 | 7.2 | 7.1 | 8 | 0.02 | ≤ 0.02 |
| 0.6 | 4.8 | 4.3 | 10 | ≤ 0.02 | ≤ 0.02 |
| 0.8 | 2.5 | 2.5 | 12 | ≤ 0.02 | ≤ 0.02 |
| 1 | 1.93 | 1.67 | 13 | ≤ 0.02 | ≤ 0.02 |
| 1.5 | 0.81 | 0.61 | 14 | ≤ 0.02 | ≤ 0.02 |
| 2 | 0.44 | 0.38 | 15 | ≤ 0.02 | ≤ 0.02 |
| 2.5 | 0.27 | 0.24 | 16 | ≤ 0.02 | ≤ 0.02 |

This is a metric design and millimeter dimensions take precedence ($\frac{mm}{inch}$)

## Typical time/current characteristics

**Type 3300 0.05...7 A** **AC/DC** [1]

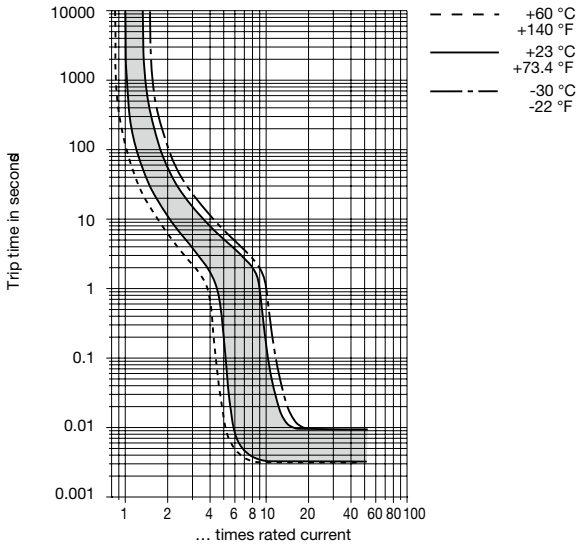


**Type 3300 8...16 A** **AC/DC** [1]

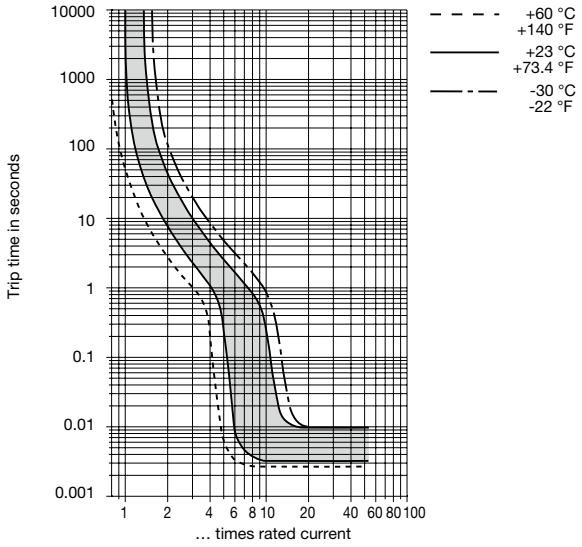


[1] Magnetic tripping currents are increased by 20 % on DC supplies.

**Type 3400 0.05...7 A** **AC/DC** [1]

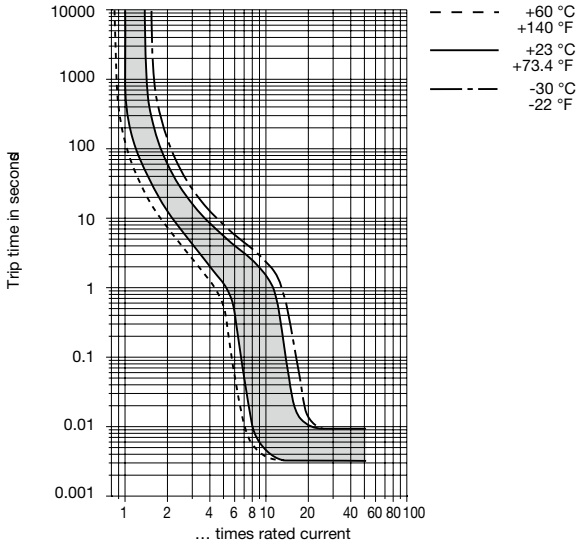


**Type 3400 8...16 A** **AC/DC** [1]

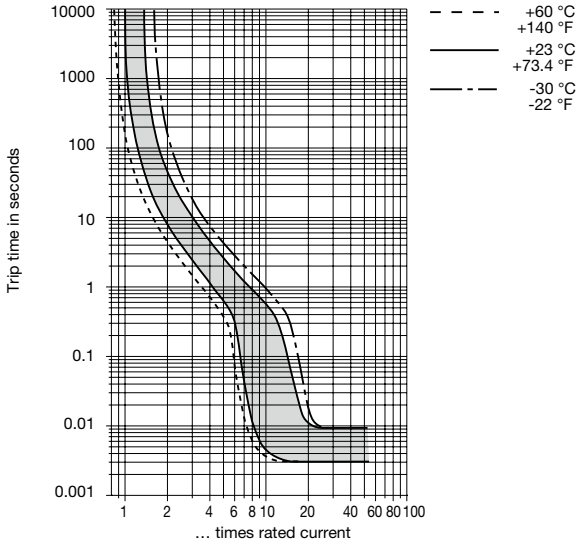


[1] Magnetic tripping currents are increased by 20 % on DC supplies.

The time/current characteristic curve depends on the ambient temperature prevailing. In order to eliminate nuisance tripping, please multiply the circuit breaker current ratings by the derating factor shown below. See also section Technical information.

| Ambient temp. °F<br>°C | -22<br>-30 | -4<br>-20 | +14<br>-10 | +32<br>0 | +73.4<br>+23 | +104<br>+40 | +122<br>+50 | +140<br>+60 |
|---|---|---|---|---|---|---|---|---|
| Derating factor | 0.76 | 0.79 | 0.83 | 0.88 | 1 | 1.08 | 1.16 | 1.24 |

## Accessories

**For push buttons with M12 moulded threadneck** (-iG2)
(not with manual release -H)

**Hex nut with splash cover, black**
**X 200 801 03 with O ring**
(IP66 and IP67)

**Hex nut with splash cover, transparent**
**X 200 801 08 with O ring**
(IP66 and IP67)

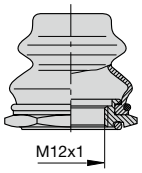


**Water splash cover, transparent with knurled nut**
**X 210 663 01** (IP64)

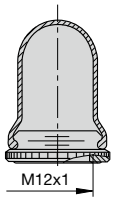


This is a metric design and millimeter dimensions take precedence ($\frac{mm}{inch}$)

All dimensions without tolerances are for reference only. In the interest of improved design, performance and cost effectiveness the right to make changes in these specifications without notice is reserved.Product markings may not be exactly as the ordering codes. Errors and omissions excepted.