E-T-A Thermal-Magnetic Circuit Breakers 3300/3400

Description

Single pole thermal-magnetic circuit breakers with tease-free, trip-free, press-to-reset, snap action mechanism (R-type TM CBE to EN 60934; M-type with manual release (-H). Available with fast acting and standard magnetic tripping characteristics - types 3300 and 3400 - both with threadneck panel mounting. Options include auxiliary contacts, a separate shunt tap terminal (-A3), and pull-to-trip manual release (-H). Approved to CBE standard EN 60934 (IEC 60934).

Typical applications

Control systems, instrumentation, medical equipment, machine tools, robotics.

Ordering information 3300

Type No.

3300 fast acting

Mounting

iG2 moulded threadneck M12x1, > 5 pcs: hex nut and knurled nut bulk shipped

Terminal design

P10 blade terminals tin-plated DIN 46244-A6.3-0.8

Current ratings

0.05...16 A

3300 -iG2 - P10 -10 A

Ordering information 3400

Type No.

3400 standard delay

Mounting

iG2 moulded threadneck M12x1 (bulk-shipped), not with -H;

... leave blank for metal threadneck, required for -H

Terminal design

P10 blade terminals 6.3-0.8 (QC .250)

K20 screw terminals M3.5x5.5 with clamp (not for -Si and -A3)

Shunt terminal (optional)

A3 same as main terminals, up to I_N=7 A max. load 5 A

Manual release (optional)

H manual release facility (pull), without reinforced insulation in operating area, for M12x1 metal threadneck only. Metal threadneck version for -H is not approved.

Auxiliary contacts (optional)

Si with silver-plated solder terminals (N/O and N/C)

Current ratings

0.05...16 A

3400 -iG2 - P10 - .. - .. - Si -10 A ordering example, without manual release and with moulded threadneck

3400 - ... - P10 - .. - H - Si - 10 A ordering example, with manual release and metal threadneck

Please be informed that we have minimum ordering quantities to be observed.

Approvals

Authority	Standard	Rated voltage	Current ratings
VDE	IEC/EN 60934	AC 240 V DC 65 V	0.05...16 A 0.05...16 A
UL	UL 1077 C22.2 No 235	AC 250 V DC 80 V	0.05...16 A 0.05...16 A
CSA	C22.2 No 235	AC 250 V DC 80 V	0.05...16 A 0.05...16 A



3300
fast acting

3400
standard delay

Technical data

For further details please see: http://www.e-t-a.de/ti_e

Voltage rating	AC 240 V, 50/60 Hz; DC 65 V
Current ratings	0.05...16 A
Auxiliary circuit	AC 240 V / DC 65 V, 1 A
Typical life with -H: without -H: 0.05...8 A > 8 A	 5,000 operations at 1 x I_N, inductive 5,000 operations at 2 x I_N, resistive 5,000 operations at 2 x I_N, inductive 1,500 operations at 2 x I_N, inductive
Ambient temperature	-30...+60 °C (-22...+140 °F)
Insulation co-ordination (IEC 60664)	2.5 kV/2 reinforced insulation in operating area
Dielectric strength operating area main circuit/aux. circuit aux. circuit 4-5/6-7	 AC 3,000 V AC 1,500 V AC 840 V
Insulation resistance	> 100 MΩ (DC 500 V)
Interrupting capacity I_{cn}	0.05...0.8 A self-limiting 1...2 A 200 A 2.5...16 A 400 A
Interrupting capacity (UL 1077)	I_N U_N 0.05...16 A AC 250 V 1,000 A 0.05...16 A DC 80 V 1,000 A
Degree of protection (IEC 60529)	operating area IP40 terminal area IP00
Vibration	5 g (57-500 Hz), ± 0.38 mm (10-57 Hz) to IEC 60068-2-6, test Fc 10 frequency cycles/axis
Shock	25 g (11 ms) to IEC 60068-2-27, test Ea
Corrosion	96 hours at 5 % salt mist to IEC 60068-2-11, test Ka
Humidity	240 hours at 95 % RH, to IEC 60068-2-78, test Cab
Mass	3300: approx. 55 g 3400: approx. 50 g

1

Dimensions

-iG2-P10

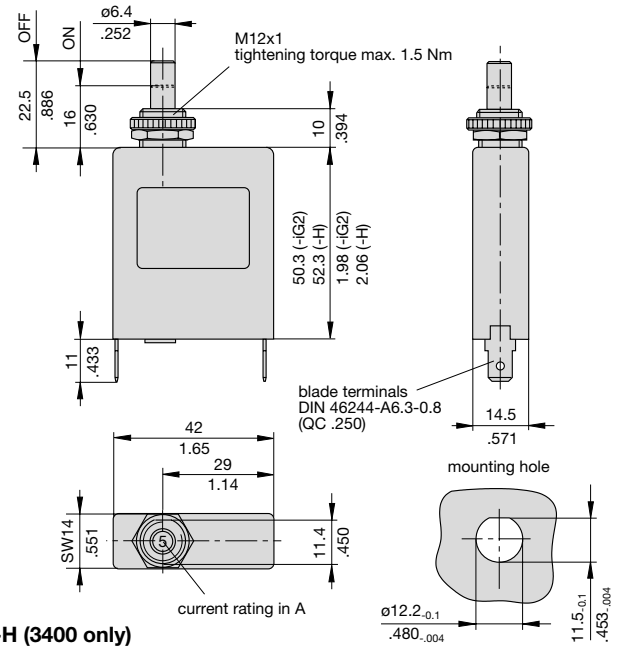

-H (3400 only)

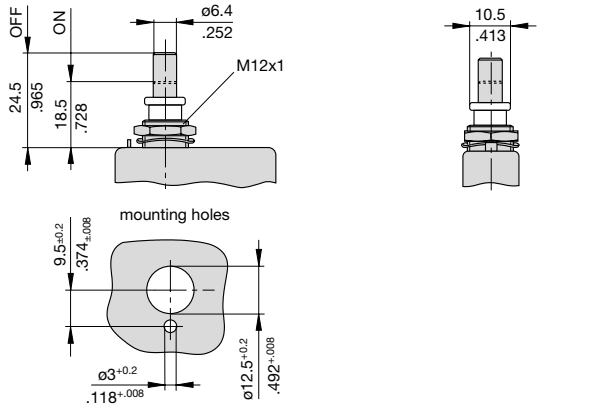

Installation drawing

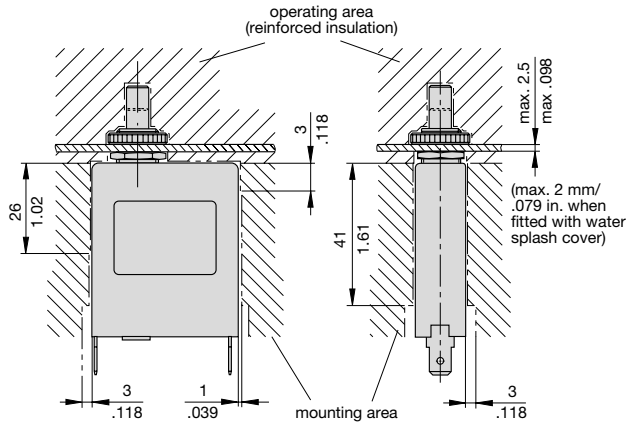

Internal connection diagrams

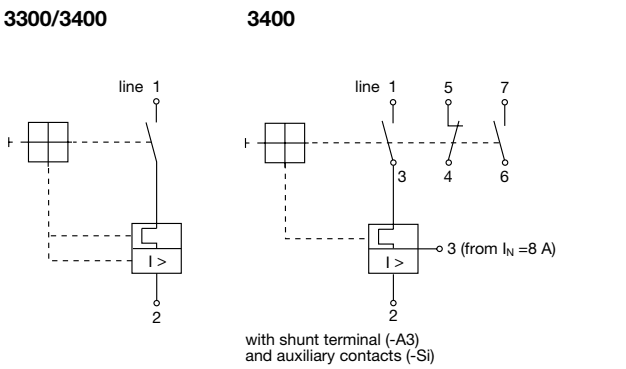

Terminal design 3400

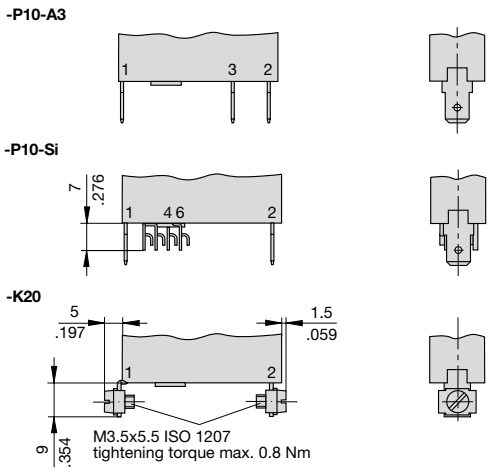

Standard current ratings and typical internal resistance values

Current ratings (A)	Internal resistance (Ω)		Current ratings (A)	Internal resistance (Ω)	
	3300	3400		3300	3400
0.05	447	211	3	0.18	0.19
0.1	131	131	4	0.109	0.090
0.2	41	40	5	0.066	0.061
0.3	19.6	19.3	6	0.046	0.041
0.4	10.4	10.4	7	0.032	0.034
0.5	7.2	7.1	8	0.02	≤ 0.02
0.6	4.8	4.3	10	≤ 0.02	≤ 0.02
0.8	2.5	2.5	12	≤ 0.02	≤ 0.02
1	1.93	1.67	13	≤ 0.02	≤ 0.02
1.5	0.81	0.61	14	≤ 0.02	≤ 0.02
2	0.44	0.38	15	≤ 0.02	≤ 0.02
2.5	0.27	0.24	16	≤ 0.02	≤ 0.02

This is a metric design and millimeter dimensions take precedence ($\frac{mm}{inch}$)

Typical time/current characteristics

Type 3300 0.05...7 A **AC/DC** [1]

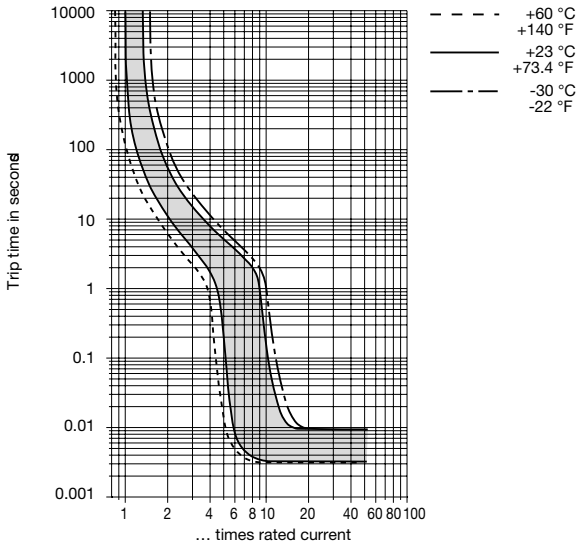

Type 3300 8...16 A **AC/DC** [1]

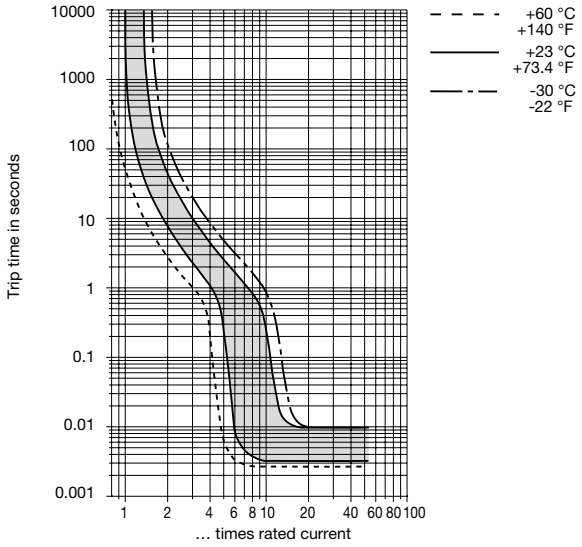

[1] Magnetic tripping currents are increased by 20 % on DC supplies.

Type 3400 0.05...7 A **AC/DC** [1]

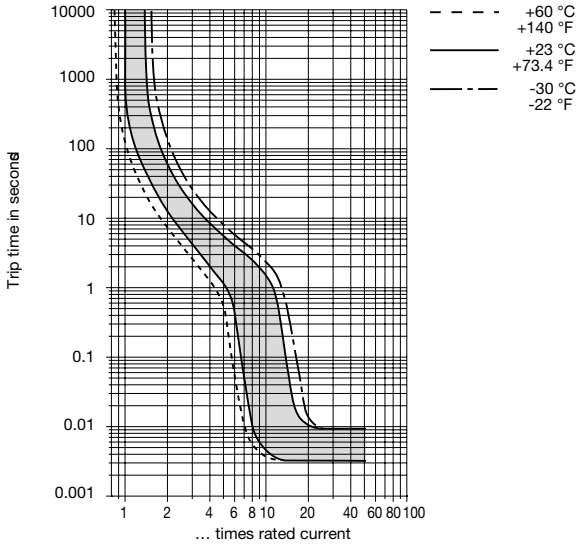

Type 3400 8...16 A **AC/DC** [1]

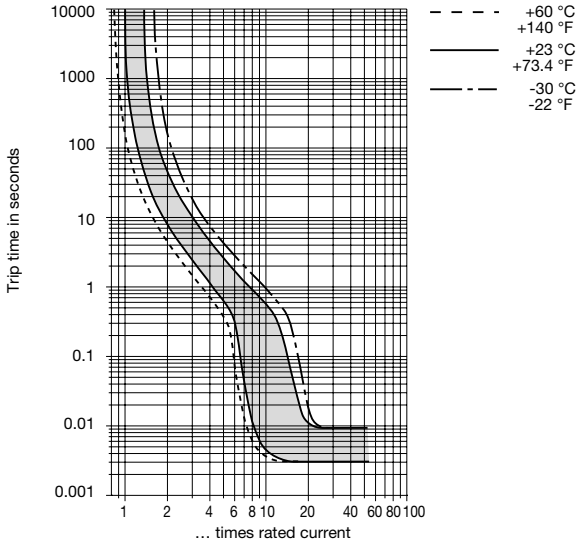

[1] Magnetic tripping currents are increased by 20 % on DC supplies.

The time/current characteristic curve depends on the ambient temperature prevailing. In order to eliminate nuisance tripping, please multiply the circuit breaker current ratings by the derating factor shown below. See also section Technical information.

Ambient temp. °F °C	-22 -30	-4 -20	+14 -10	+32 0	+73.4 +23	+104 +40	+122 +50	+140 +60
Derating factor	0.76	0.79	0.83	0.88	1	1.08	1.16	1.24

Accessories

For push buttons with M12 moulded threadneck (-iG2)
(not with manual release -H)

Hex nut with splash cover, black
X 200 801 03 with O ring
(IP66 and IP67)

Hex nut with splash cover, transparent
X 200 801 08 with O ring
(IP66 and IP67)

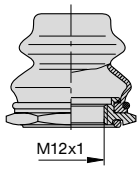

Water splash cover, transparent with knurled nut
X 210 663 05 (IP64)

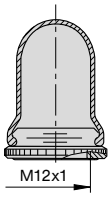

This is a metric design and millimeter dimensions take precedence (mm / inch)

All dimensions without tolerances are for reference only. In the interest of improved design, performance and cost effectiveness the right to make changes in these specifications without notice is reserved.Product markings may not be exactly as the ordering codes. Errors and omissions excepted.