E-T-A High Performance Thermal Circuit Breaker 4120-...

Description

Single pole, miniaturised thermal circuit breaker with trip-free mechanism and push/pull on/off manual actuation (M-type TO CBE to EN 60934). Threadneck panel mounted, temperature-compensated, with optional auxiliary contacts. Fully approved for commercial aircraft and similar requirements.
Various dummies are available without protective function, allowing connection of pre-installed wiring without loads.

US patent number: US 6,490,141 B2 (4120-G4 moulded threadneck)

Typical applications

Extra low voltage wiring systems on all types of vehicles for land, sea and air.

Ordering information

Type No.
4120 single pole, with temperature compensation
Mounting
G threadneck panel mounting
Threadneck design
1 M12x1x6.3 (aluminium)
2 7/16-32 UNx6.3 (aluminium)
Number of poles
1 1-pole, thermally protected
Hardware for threadneck
0 without hardware
1 hex nut M12x1, corrugated washer 12/15, fitted
3 hex nut M12x1 (aluminium), serrated lock washer 12.1/17.2, bulk shipped
4 hex nut 7/16-32UN (aluminium), serrated lock washer 11.3/14.9, fitted
Terminal design (main terminals)
K1 screw terminals with metric thread K14 (M4)
J1 screw terminals with inch thread J14 (8-32UNC-2B)
J2 screw terminals with inch thread J17 (8-32UNC-2B)
J3 screw terminals with inch thread J25 (6-32UNC-2B)
P1 blade terminals 6.3x0.8, DIN 46244, silver-plated
Characteristic curve
M1 thermal, 1.15 - 1.4 I_N
Terminal screws
A Phillips screw M4x6, fitted
B Phillips screw 8-32UNC-2Ax6, fitted
C Phillips screw 6-32UNC-2Ax6 (MS 51957-26)
K hex screw with Phillips head 8-32UNC-3Ax7.6, fitted
M hex screw with Phillips head 8-32UNC-3Ax7.6, bulk shipped
Z without terminal hardware
Terminal washers
0 without lock washer
1 wave washer A4, fitted
2 lock washer 4.3, fitted
4 lock washer 3.7 (MS 35338-136)
5 lock washer 4.3/9, fitted
6 lock washer 4.3/9, bulk shipped
Auxiliary contact
S0 without auxiliary contact
S1 with auxiliary contact (connector EN 3155-016M2018) (NC)
S5 with polarized auxiliary contact (NC)
Barrier
Z without barrier
Colour of the push button
G green to EN (e. g. 2 1/2)
N black to EN (e. g. 2 1/2)
Current ratings
1...25 A

4120 - G 1 1 1 - K1 M1 - A 1 S0 Z N - 10 A ordering example



4120-...

Technical data

Voltage rating	AC 115 V (300 Hz to 800 Hz); DC 28 V	
Current rating range	1...25 A (0.5 A upon request)	
Auxiliary circuit	1 A, DC 28 V (0.5 A upon request)	
Typical life	20,000 operations mechanical, or 5,000 operations at 1 x I_N	
Ambient temperature	-55°C ...+125°C (-67...+257 °F)	
Insulation co-ordination (IEC 60664 and 60664A)	rated impulse withstand voltage 1.5 kV	pollution degree 3
Dielectric strength (IEC 60664 and 60664A)	test voltage	
operating area	AC 1,500 V	
main to aux. circuit	AC 1,500 V	
Insulation resistance	> 100 MΩ (DC 500 V)	
Interrupting capacity I_{cn}	AC 115 V (400 Hz):	1...4 A 1,000 A 5...25 A 2,000 A
	DC 28 V:	1...25 A 6,000 A
Degree of protection (IEC 60529/DIN 40050)	operating area IP40 terminal area IP00	
Vibration (sinusoidal)	10 g (57-2000 Hz), ± 0.76 mm (5-57 Hz) to ISO 7137, EN 2350 para. 5.3.1	
Vibration	1...2.5 A: 0.04 g^2/Hz ± 1,5 dB; 7.3 g eff 3...20 A: 0.06 g^2/Hz ± 1,5 dB; 9 g eff to ISO 7137, EN 2350 para. 5.3.1	
Acceleration	17 g, to ISO 2669, EN 2350 para. 5.3.3	
Shock	50 g (11 ms), to ISO 7137, EN 2350 para. 5.3.2	
Corrosion	48 hours at 5 % salt mist to ISO 7137, EN 2350 para. 5.4.2	
Humidity	240 hours at 95 % RH, to ISO 7137, EN 2350 para. 5.4.3	
Explosion	to VG 95210, sheet 10	
Altitude	≤ 22,000 m above sea level	
Mass	approx. 20.6 g	with terminal screws, without -Si
	approx. 24.6 g	with terminal screws, with -Si

Preferred types

Preferred types	Standard current ratings (A)								
	1	2	3	5	7.5	10	15	20	25
4120-G214-J1M1-B2S0ZN (MS3320)	x	x	x	x	x	x	x	x	x
4120-G111-K1M1-A1S0ZN (EN 2495/VG93345 T06)	x	x	x	x	x	x	x	x	x

Standard current ratings and typical volt drop values

Current rating (A)	Volt drop (mV)	Current rating (A)	Volt drop (mV)
1	1100	7.5	250
2	550	10	230
2.5	460	15	200
3	440	20	190
4	380	25	190
5	260		

Approvals (configurations)

Authority	Standard	Voltage ratings	Current ratings
UL	UL 1077	DC 50 V	0.5 A...25 A
Bw	VG 95345, part 6	AC 115 V, 400 Hz DC 28 V	1 A...25 A 1 A...25 A
Bw	EN 2495-...U / -...M	AC 115 V, 400 Hz DC 28 V	1 A...25 A 1 A...25 A
Bw	LN 29887	AC 115 V, 400 Hz DC 28 V	5 A...25 A 5 A...25 A
Bw	EN 3773-004	AC 115 V, 400 Hz DC 28 V	1 A...25 A 1 A...25 A
Dep. of the Navy	MS 3320	AC 115 V, 400 Hz DC 28 V	1 A...20 A 1 A...20 A
Airbus	EN 2995-004	AC 115 V, 400 Hz DC 28 V	1 A...25 A 1 A...25 A
Airbus	EN 2995-005	AC 115 V, 400 Hz DC 28 V	1 A...25 A 1 A...25 A

Dimensions 4120-...

4120-G214-J1M1-B2S0ZN (MS 3320)

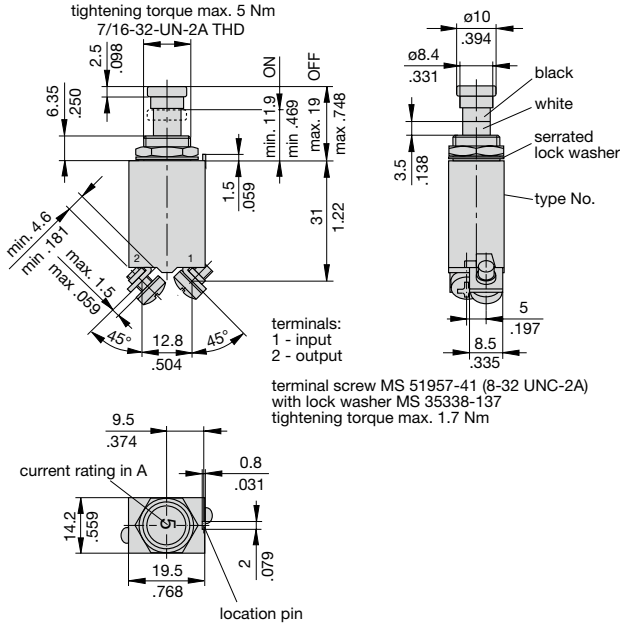

This is a metric design and millimeter dimensions take precedence (mm / inch)

Dimensions 4120-G1..

4120-G111-K1M1-A1S0ZN (EN2495-...M) (VG95345 T06)

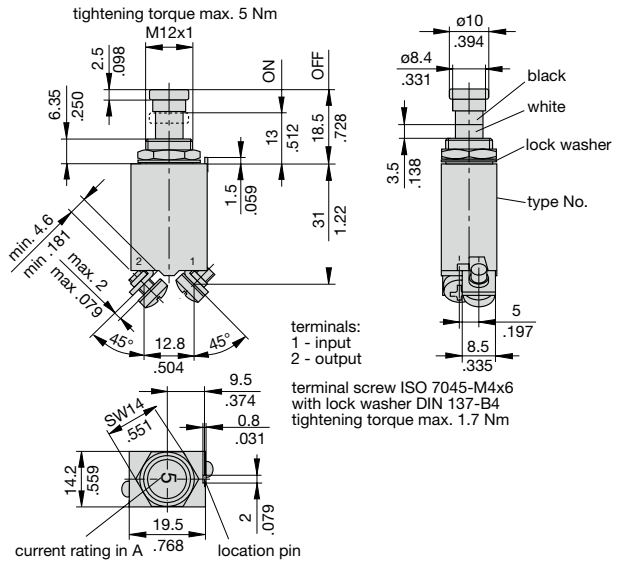

4120-G11.-J2M1-K5S0ZN (EN2495-...U, EN3773-004 D...)

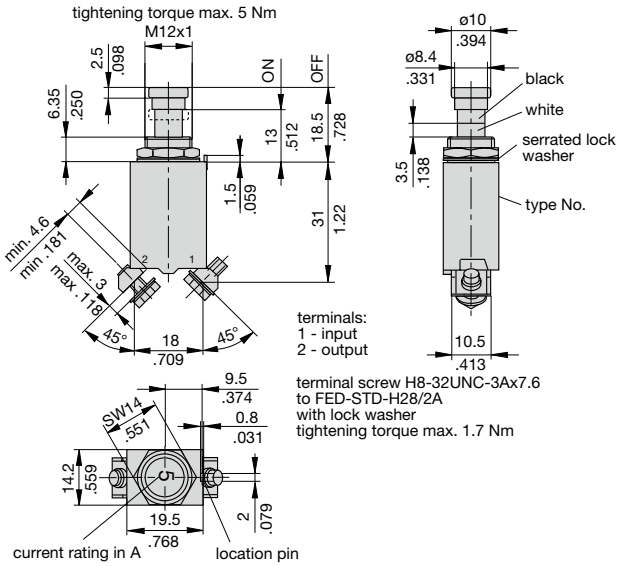

4120-G112-J2M1-K5S1ZG - 4120-G112-J2M1-K5S5ZG

(EN2995-004) (EN2995-005)

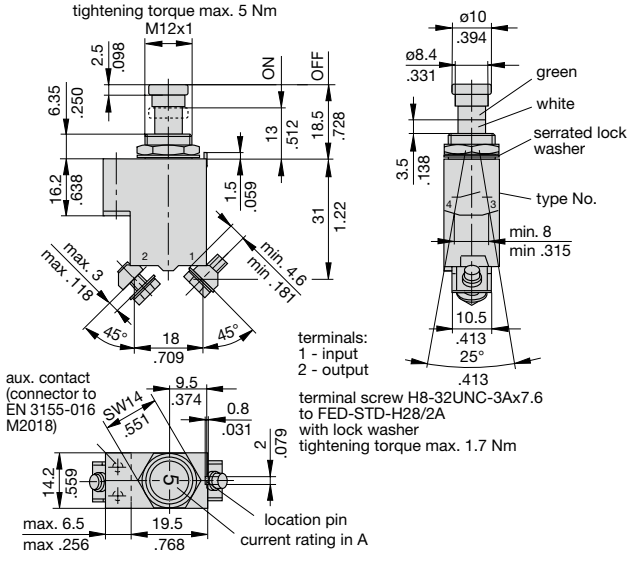

Mounting holes

4120-G2...

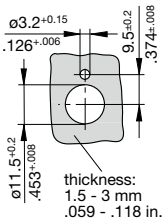

mounting holes S0

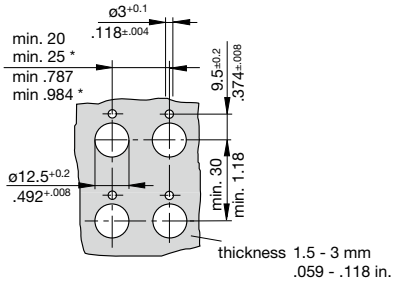

4120-G1...

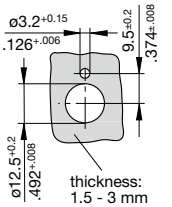

mounting holes S1 or S5

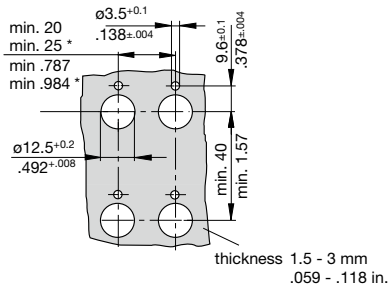

* min. 25 mm / .984 in. when fitted with splash cover

Other terminal designs

Terminal design -J2

Terminal distances to:
MS 14 105 (a, b)
MS 14 153 (a, b)
MS 22 073 (a)
MS 22 074 (a)
MS 25 244 (a)
MS 25 373 (a, b)

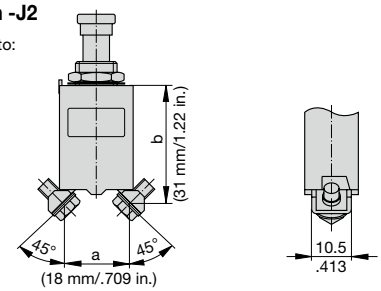

Terminal design -J3

Terminal distances to:
MS 26 574 (a, b)

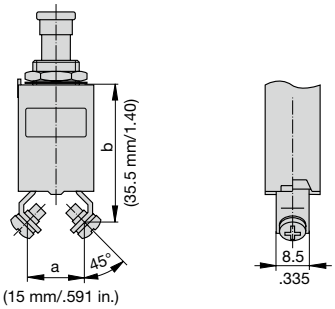

Terminal design -P1

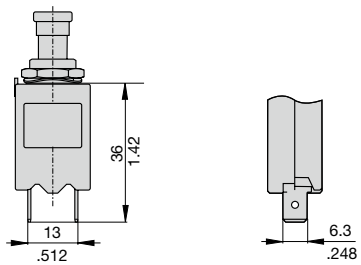

Internal connection diagram

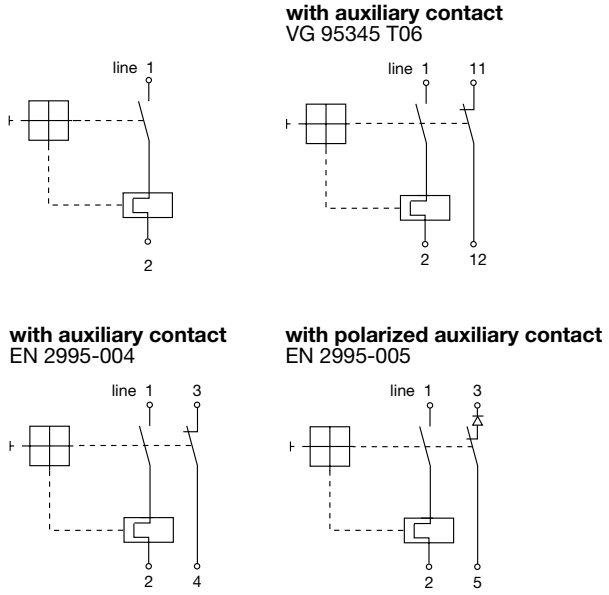

Typical time/current characteristics

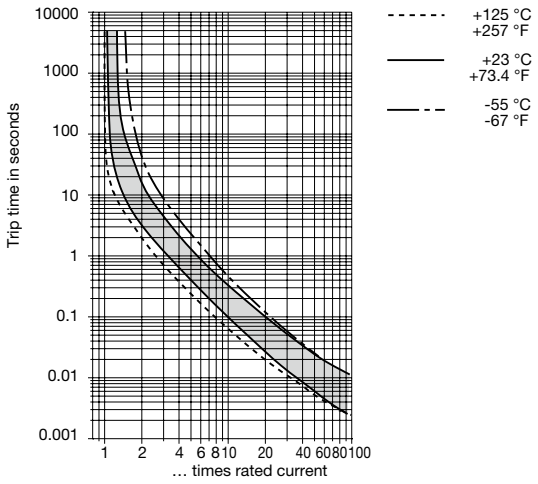

This is a metric design and millimeter dimensions take precedence ($\frac{mm}{inch}$)

Accessories (approved to VG 95 345, part 23)

Splash cover/hex nut assembly with O ring (IP66 and IP67)
X 200 801 08 nickel plated nut, transparent cover
X 200 801 03 matt black finish nut, black cover
X 200 801 09 matt black finish nut 7/16-32, black cover
X 200 801 12 with blackened nut and transparent cover

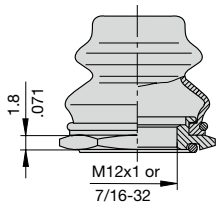

Actuator extension (black) to be fitted on the push button
X 200 803 01

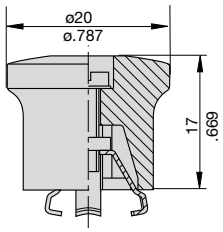

Accessories

Identification collar to be snapped on the push button
Y 307 004 01 black
Y 307 004 02 white
Y 307 004 03 red
Y 307 004 04 green
Y 307 004 05 blue

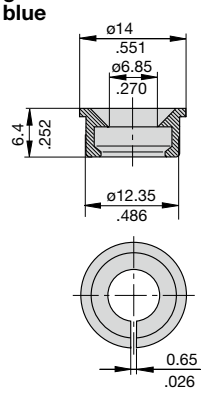

Lock out ring to block the push button in OFF position
Y 307 005 01 red
Y 307 005 02 black

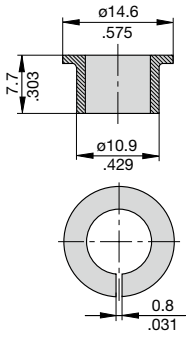

This is a metric design and millimeter dimensions take precedence (mm / inch)

All dimensions without tolerances are for reference only. In the interest of improved design, performance and cost effectiveness the right to make changes in these specifications without notice is reserved.Product markings may not be exactly as the ordering codes. Errors and omissions excepted.