Variable frequency drives **DC1**, **DA1**, **DB1**, **DG1** and **DM1**
Decentralized, electronic drive system **Rapid Link 5**

Variable speed starter **DE1**
Soft starters **DS7** and **S811+**



Product Range Catalog

Efficient drive technology for starting, controlling and regulating motors







EATON
Powering Business Worldwide



* At Eaton, we believe that power is a fundamental part of just about everything people do. That's why we're dedicated to helping our customers find new ways to manage electrical, hydraulic and mechanical power more efficiently, safely and sustainably. To improve people's lives, the communities where we live and work, and the planet our future generations depend upon. Because this is what really matters. And we're here to make sure it works.

To learn more go to:
www.Eaton.com/whatmatters

EATON
Powering Business Worldwide

We make what matters work.

Table of Contents

	Page
Switch, Protect, and Drive Your Motors – Today and Tomorrow	2
Product Overview	4
Software and tools	8
Soft Starters	
DS7 soft starters up to 110 kW (two-phase control)	12
S811+ soft starters up to 710 kW (three-phase control)	38
PowerXL variable speed starter and variable frequency drive	
DE1 variable speed starter up to 7.5 kW	54
Variable frequency drive DC1 to 22 kW	72
Variable frequency drive DB1 up to 4 kW	106
Variable frequency drive DA1 to 160 kW	126
Variable frequency drive DM1 to 22 kW	156
Variable frequency drive DG1 to 160 kW	184
General accessories and engineering	212
Decentralized Drive System Rapid Link 5	230
AS-Interface RAMO5, RASP5	234
Profinet RAMO5, RASP5	245
Ethernet/IP RAMO5, RASP5	252
Accessory devices	256
Appendix (motor data, motor information)	266
Worldwide export of machines and plants	270
Service information	272

Future-proof switching, protection and operation of motors

With Eaton, you are ideally prepared for meeting the requirements of the new ErP Directive. In addition to revising our existing product range for the safe switching, protection and operation of motors, we have also added a number of clever new solutions.

Flexible solutions for greater energy efficiency

We offer flexible solutions for all types of machine-building applications, from fans, pumps and conveyor belts to hydraulic pumps and more. Whether your application requires constant speed, soft starting or simple or complex speed control – we offer a wide range of products for combination with standard motors and highly energy-efficient drives.

Versatile communication and data acquisition options

Our intelligent connection system reduces wiring costs by up to 85%. At the same time, it reduces installation errors and simplifies both planning and commissioning. The connected devices deliver both analog and digital data, for example on machine states, motor currents or energy consumption. This helps to increase the availability of machines and systems while optimizing their energy consumption.

Moreover, we also offer additional communication systems. With CANopen or Modbus RTU, you can choose the system that best matches the needs of your plant.

System control and data storage and visualization

The trend towards greater data transparency, particularly with regard to optimizing energy consumption in motor applications, not only requires data to be collected, but also to be analyzed more effectively. The data storage options offered by the machine itself are not sufficient for this purpose. Therefore, the data need to be collected and forwarded to a server for processing via the control system. We also offer the right solution for this task, irrespective of whether the data are locally processed or uploaded to the cloud.

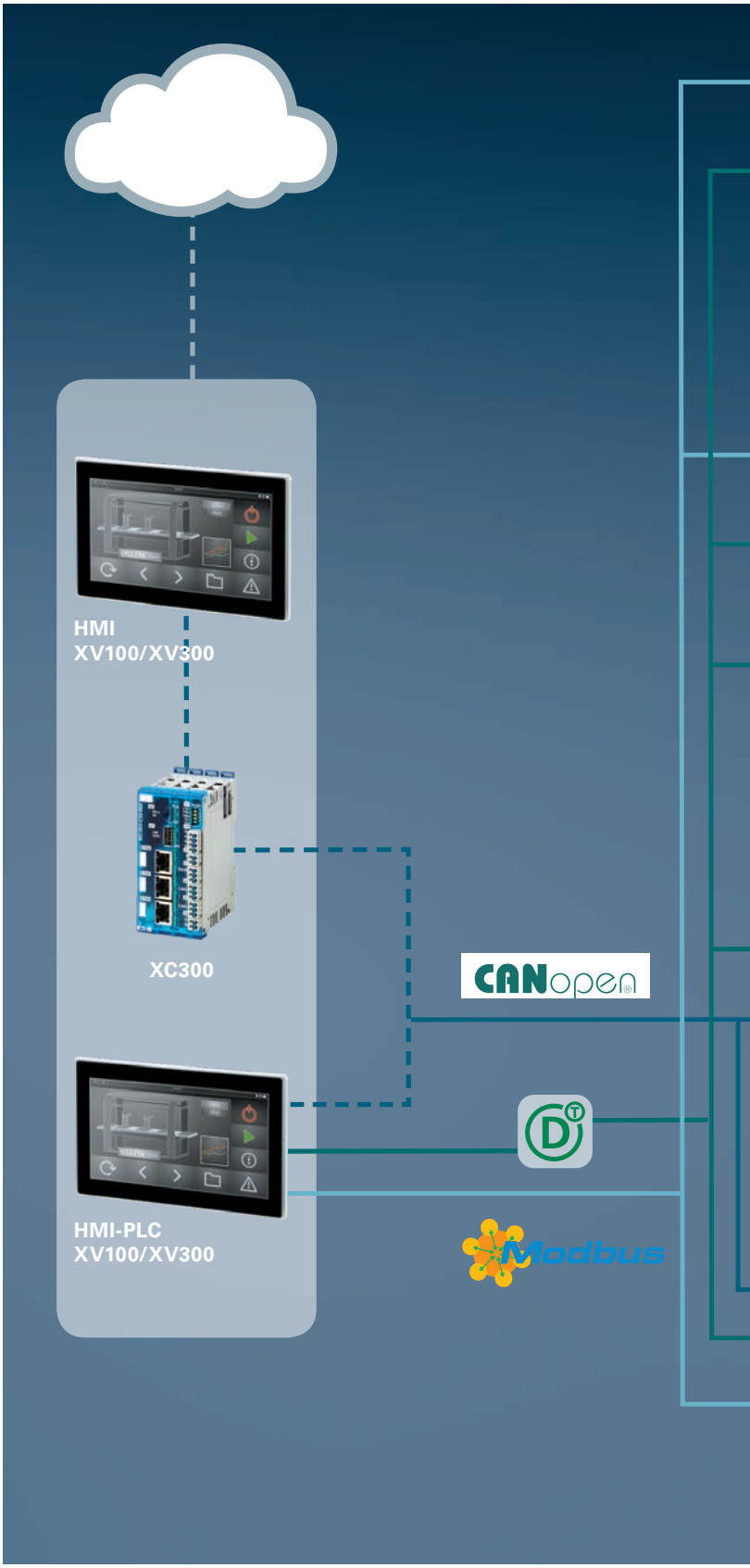



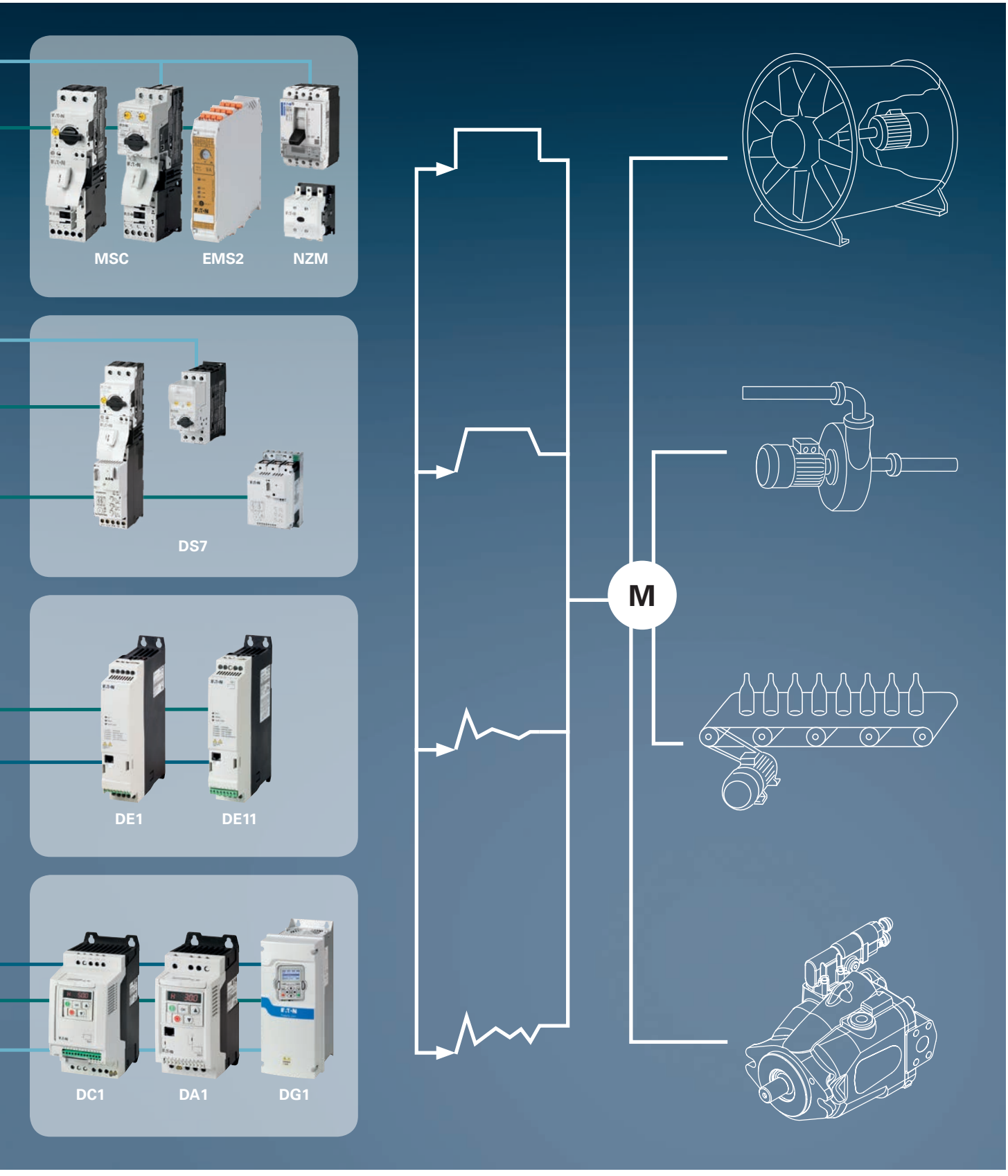

Energy savings of 15% for the pumping station of a waterworks

When the pump system of a waterworks had to be replaced, Aquatech, an Eaton Solution Partner, developed a new drive system in cooperation with the operator. This enabled the operator to reduce its operating and maintenance costs and achieve a rapid return on investment for the system upgrade. The combination of DG1 drives with IE4 motors allows for speed-controlled operation: During start-up, the pumping capacity increases only gradually.

Thereby avoiding the voltage peaks and pressure surges that often plagued the old system. In fact, this has enabled the waterworks to entirely eliminate gate valves during start-up. With the new system, sudden pressure changes in the water mains are also a thing of the past – thanks to the variable frequency drives, which gradually reduce the power output of the pumps. As a result, the non-return valves now close in a much more gentle manner, which translates into less wear on the equipment.

Variable frequency drives product overview

DE1/DE11 **Machinery Micro** 	**DC1** **Machinery Compact** 	**DB1** **OEM Cold Plate** 	**DA1** **Machinery Advanced** 
• Automatic doors and barriers • Drilling machines, milling machines • Airlocks, industrial washing machines • Pumps, low-power fans • Conveyor belts, treadmills		• Mobile pumps • Motor-mounted compressors • Gas burners	• Extruders, compressors • Crane and lifting equipment • Tunnel boring machines, draw benches • Crushers, mixers, stirrers
• V/f Control mode	• V/f Control mode • Sensorless vector control (SLV) • Permanent magnet, synchronous reluctance, and brushless DC motors		• V/f Control mode • Sensorless vector control (SLV) • Closed-loop vector control (CLV) • PM-. Synchronous reluctance and brushless DC motors
DE11: • Plug-in terminals • Configurable relay output • PTC/EX: Option EMT6	• Brake Chopper optional • PTC/EX: Option EMT6		• Standard + internal PLC • Brake Chopper • STO (SIL 2, PL c, Cat. 1) • PTC/EX: Option EMT6
Digital Inputs 3 (4) Analog inputs 1 (1) Digital Outputs 0 Analog Outputs 0 Relay outputs 1 Expansion slots 1	Digital Inputs 3 (4) Analog inputs 1 (2) Digital Outputs 0 (1) Analog Outputs 1 (1) Relay outputs 1 Expansion slots 1		Digital Inputs 4 (5+3) Analog inputs 1 (2) Digital Outputs 0 (2) Analog Outputs 2 (2) Relay outputs 2 Expansion slots 1
0.25 - 2.2 kW (1~ 230 V/3~ 230 V) 0.37 - 7.5 kW (3~ 400 V/3~ 400 V)	0.37 - 0.55 kW (1~ 115 V/1~ 115 V) 0.37 - 1.1 kW (1~ 115 V/3~ 230 V) 0.37 - 1.1 kW (1~ 230 V/1~ 230 V) 0.37 - 4 kW (1~ 230 V/3~ 230 V) 0.37 - 11 kW (3~ 230 V/3~ 230 V) 0.75 - 22 kW (3~ 400 V/3~ 400 V)	0.37 - 1.5 kW (1~ 230 V/3~ 230 V) 0.75 - 4.0 kW (3~ 400 V/3~ 400 V)	0.75 - 2.2 kW (1~ 230 V/3~ 230 V) 0.75 - 75 kW (3~ 230 V/3~ 230 V) 0.75 - 160 kW (3~ 400 V/3~ 400 V) 0.75 - 110 kW (3~ 575 V/3~ 575 V)
drivesConnect & drivesConnect mobile App			

Rapid Link product overview

RAMO5 **Decentralized motor starter** 		**RASP5** **Decentralized variable frequency drive** 	
• Conveyor belts with constant speed	• Roller and belt conveyors • Chain conveyors	• Conveyor belts with constant speed • Lift drives	• Pallet, roller, and belt conveyors • Diverters, rotary tables
• Quick Stop	• Electronic reversing start (DOL and reversing starter)	• Quick Stop • Braking resistance integrated	• EMC filter, integrated
• 2/4 sensor inputs, 2 outputs • Manual/automatic mode	• Configurable motor protection / thermistor protection • Special material handling equipment functions	• 2/4 sensor inputs, 2 outputs • Manual/automatic mode	• Configurable motor protection / thermistor protection • Special material handling equipment functions • STO (SIL 3, PL e, Cat. 3)
• 0.09 - 3.0 kW (400 V AC)		• 0.75 - 4.0 kW (400 V AC)	
drivesConnect & drivesConnect mobile App			

DM1 **General Purpose Micro** 	**DM1 Pro** **General Purpose Compact** 	**DG1** **General Purpose** 
	• Pumps, fans • Compressors • HVAC • Mills, crushers, presses • Conveyor belts	
• V/f Control mode	• V/f Control mode • Sensorless vector control (SLV) • Permanent magnet motors	• V/f Control mode • Sensorless vector control (SLV) Torque control (SLV) • Permanent magnet motors
• Multi-drive / multi-pump • Brake Chopper • PTC/EX: Option EMT6	• Multi-drive / multi-pump, web server • Brake Chopper • STO (SIL 2, PL d, Cat. 3) • PTC/EX: Option EMT6	• Multi-drive / multi-pump, RTC, web server • Brake Chopper on-board (≥ 61 A optional) • STO: (SIL 1, PL c, Cat. 1) • PTC/EX: Option EMT6
Digital Inputs 4 Analog inputs 1 Digital Outputs 0 Analog Outputs 1 Relay outputs 1 Expansion slots 0	Digital Inputs 4 Analog inputs 1 Digital Outputs 0 Analog Outputs 1 Relay outputs 2 Expansion slots 1	Digital Inputs 8 (+12) Analog inputs 2 (+2) Digital Outputs 1 (+6) Analog Outputs 2 (+4) Relay outputs 3 (+6) Expansion slots 2
0.18 - 15 kW (3~ 230 V/3~ 230 V) 0.37 - 22 kW (3~ 400 V/3~ 400 V) 5 - 25 HP (3~ 575 V/3~ 575 V)	0.18 - 1.5 kW (1~ 115 V/3~ 230 V) 0.18 - 5.5 kW (1~ 230 V/3~ 230 V) 0.18 - 15 kW (3~ 230 V/3~ 230 V) 0.37 - 22 kW (3~ 400 V/3~ 400 V) 5 - 25 HP (3~ 575 V/3~ 575 V)	0.75 - 90 kW (3~ 230 V/3~ 230 V) 0.75 - 160 kW (3~ 400 V/3~ 400 V) 2.2 - 250 HP (3~ 575 V/3~ 575 V)
PowerXpert inControl		

Soft starter product overview

DS7 **Industrial Micro** 	**S811+** **Industrial General Purpose** 
• Pumping • Compressors	• Fans • Conveyor belts, treadmills
• Two-phase patented control • Integrated bypass	• Expanded diagnostics with SmartWire-DT • xStart-compatible
• Control voltage 24 V AC/DC /110 - 230 V AC	
• 1.5 - 110 kW (200 - 480 V AC)	
• Pumps, fans • Compressors	• Conveyor belts, treadmills • Mixers, mills, crushers
• Three-phase control • Integrated bypass	• Comprehensive diagnostics • In-delta connection
• 24 V DC control voltage Special pump algorithm	
• 7.5 - 450 kW (200 - 600 V AC) 160 - 710 kW (690 V AC)	



Pumps and fans

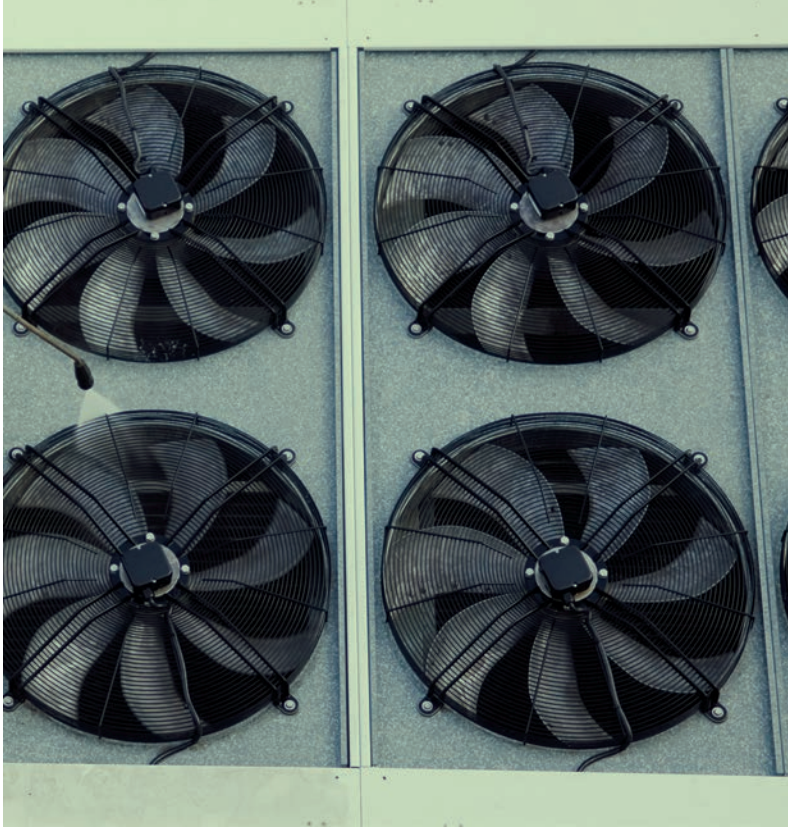

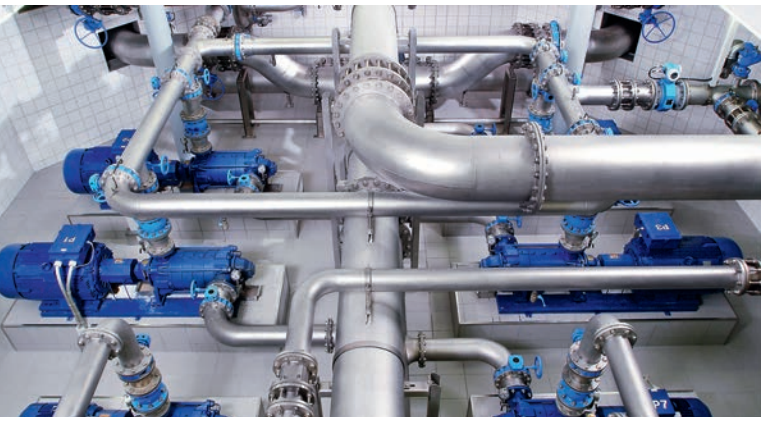





Material handling







Compressors







Machines

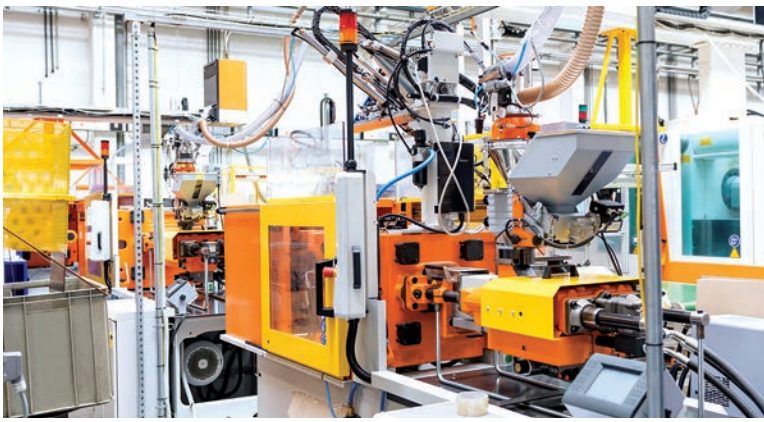

drivesConnect – The Software for optimal implementation.

The drivesConnect computer program and the drivesConnect mobile smartphone app are powerful commissioning tools for PowerXL DE1, DC1, DA1, DB1 variable frequency drives and the Rapid Link 5 electronic drive system. Beside parameterization and diagnosis user-defined internal logic links can be set up through the function block editor and transferred to the variable frequency drives.



Android/iOS
drivesConnect
Mobile App

Parameter Editor

The parameterization function has an uncluttered, easy to understand user interface. With the editor variable frequency drives can be parameterized both online and offline. In online mode monitor values can be used for diagnostics.

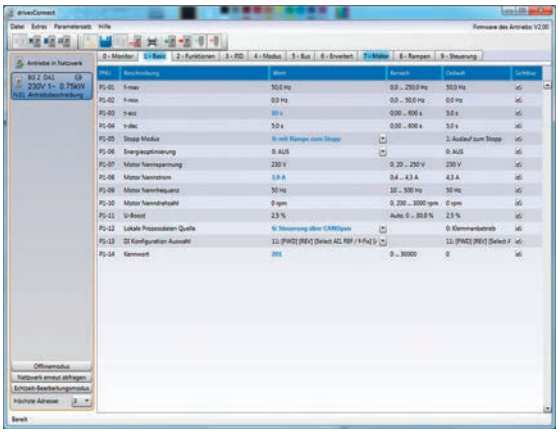

Parameter-Editor starting screen

Drive control / monitor

The drive control/monitor function makes it possible to easily run connected variable frequency drives with the use of software. This not only means that individual drive functions can be quickly accessed, but also that devices can be easily activated and deactivated.

Scope/Data Logger

The scope/data logger can be used to graphically show up to four selected variable frequency drive parameters as curves. This ensures that the behavior of display values such as motor voltage and motor current during ongoing operation can be tracked directly – and even recorded.

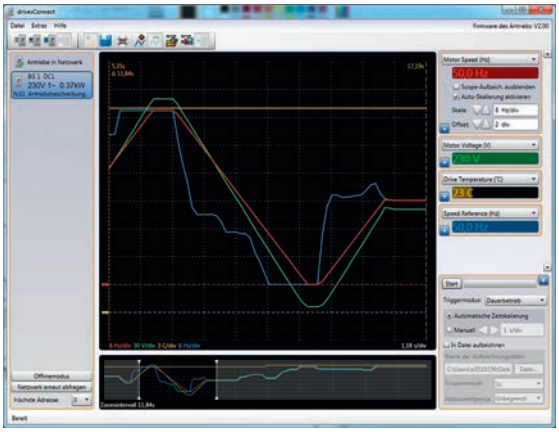

Display showing recorded signals

Function block editor

Together with the DA1 variable frequency drive, the Function Block Editor provides the option of using PLC programming to create separate logic operations – with time dependencies, for example – within the variable frequency drive. In fact, using the blocks from the "Inputs/Outputs," "Logic Functions," "Arithmetic," "Comparators," "Timers," "Counters," "Data Handling," and "Drive Functions" function groups makes it possible to generate your own applications within the Editor.

By simulating the PLC program, invalid blocks can be identified as errors and corrected directly. This makes it possible to adapt the variable frequency drive to any application, cutting down on additional hardware costs in the process.

Online installation:
www.drive-support-studio.com/OTS/Eaton/downloads/deploy/drivesConnect.htm

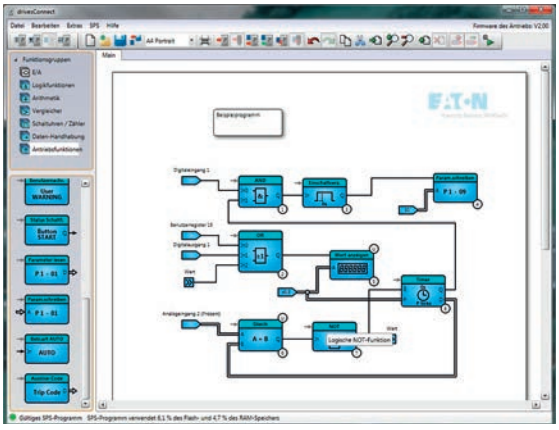

Example of visualization with various function blocks

Communications stick

Easily transfer parameter configurations

The "DX-COM-STICK3-KIT" communications stick makes it possible to quickly and easily transfer parameters from your laptop to PowerXL variable frequency drives using Bluetooth. In addition, the stick can be used to establish a connection to the drivesConnect mobile smartphone app. The convenience of this feature is only matched by the stick's copy function, which can be used to transfer parameter sets from one variable frequency drive to another. This makes the stick a perfect little helper – especially when it comes to mass production operations.



Additional PC tools

Selection aid

Simple planning and engineering

An electronic selection aid provides simple planning, helping you quickly select the drive required for your application and the associated switchgear, protective elements, chokes, and filters complete with the corresponding article number.

www.Eaton.com/drives-configurator

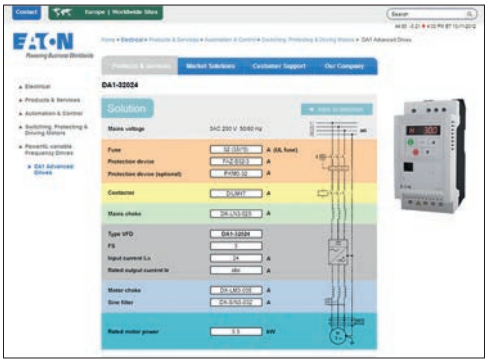

Energy savings estimator

A few steps are all it takes to determine your energy needs and save big

The "Energy Savings Estimator" is a program that calculates the estimated energy needed for applications involving fans and/or pumps. After entering your project information, you will get an estimate of the energy savings and payback time that can be achieved when using variable frequency drives instead of conventional speed controllers.

www.Eaton.com/energysavingsestimator



Power Xpert inControl – The Eaton platform that makes configuring parameters a cinch.

The Power Xpert inControl computer program is a powerful commissioning tool for PowerXL DG1 and DM1 variable frequency drives. In addition to its parameter configuration and diagnostic functionalities, it can be used to configure and view the internal oscilloscope featured by DG1 devices, making it possible to obtain plots for up to eight channels using 10 ms intervals. Moreover, Power Xpert inControl is not a platform for DG1 variable frequency drives exclusively, but instead will be used for all future Eaton devices with communication capabilities as well.

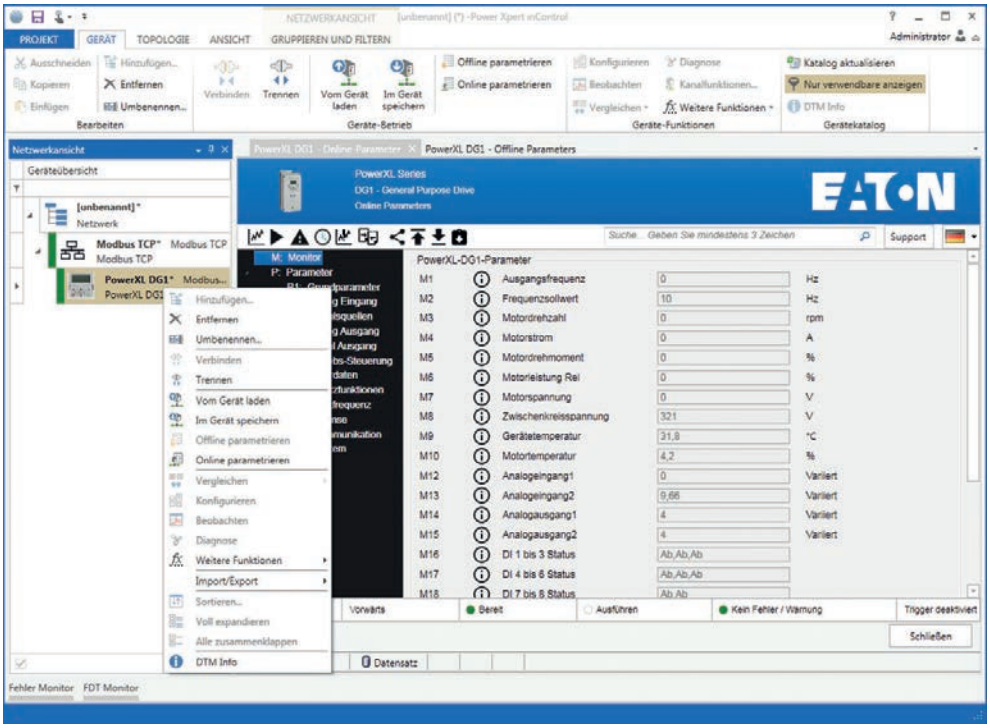

Serial or Ethernet

The connection to a computer can be established either with a serial RS-485 connection or via Ethernet. DG1 units feature hardware ports for both of these options, and Power Xpert inControl has drivers for both interfaces. In other words, the choice is up to you.

Parameterization

Online and offline

The parameterization function has an uncluttered, easy to understand user interface. With the editor variable frequency drives can be parameterized both online and offline. In online mode monitor values can be used for diagnostics.



Internal DG1 oscilloscope

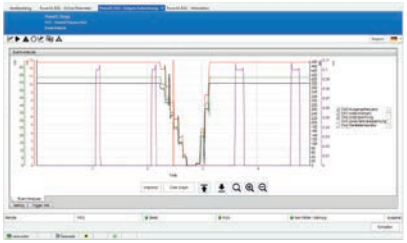

Faster analysis with 10 ms intervals

Together with Power Xpert inControl, DG1 devices can be used to plot up to 8 signals at the same time. However, most serial connections to a computer only allow for data to be sampled at relatively large time intervals, which is why DG1 units feature an integrated 8 channel oscilloscope as well. This oscilloscope makes it possible to analyze faster processes with plots using 10 ms as the time interval, and Power Xpert inControl provides comprehensive options for configuring the oscilloscope and selecting trigger signals.

Compare and document data sets

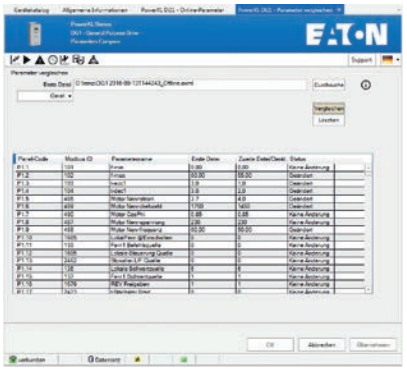

Online and offline

The comparison function enables DG1 devices to compare their parameters to another data set quickly and easily. Likewise, data can be quickly and easily entered in a spreadsheet program and filtered to see changed/different parameters – regardless of whether the comparison data comes from a different device in the system or from a saved or default data set. This provides an optimal way of reliably documenting all changes without having to go through every single parameter one at a time.

Exceptional memory

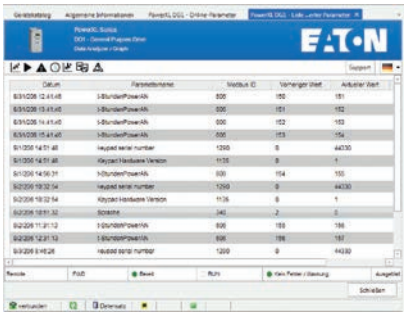

Track changes easily

Made some changes by accident? Do you need to figure out why your drive won't start anymore all of a sudden?

This is where the DG1's ability to save the last 100 parameter changes, together with a timestamp, comes in handy. Power Xpert inControl can read and show these changes,

making it easy to undo undesirable changes.

PC-connection

Cable (Modbus RTU):

By using a wired USB connection, up to 63 variable frequency drives can be connected to a PC via Modbus RTU. The software can then be used to conveniently configure their parameters.

Cable (Modbus TCP):

By using a wired Ethernet connection, virtually any number of variable frequency drives can be connected to a PC via Modbus RTU. The software can then be used to conveniently configure their parameters.

Wireless via WLAN:

An external WLAN gateway can be used to integrate the DG1 into industrial wireless networks. The connection to the actual DG1 is established with an Ethernet connection in this case. When using this type of connection, inControl will work as though it were directly connected to the corresponding DG1, and remote diagnostics will work smoothly as always.



Soft starter DS7
Soft to start, powerful in torque

Soft starters have become a well-established alternative to the star-delta starter. This is where the DS7, featuring two-phase control and designed to work seamlessly with DILM and PKZ switchgear, comes in. It can be flexibly combined with other units and adds the ability to "start motors softly" to the switching, protection, and starting functions common to control panels.
A patented method ensures that motor run-ups will be exceptionally soft while providing a higher torque than other available solutions.

Designed for normal applications such as pumps, fans and small conveyors, the compact DS7 soft starter is ideal.
The DS7 is also available with a SmartWire-DT connection to simplify wiring and enhance functionality as an automation solution.

Performance range:

- 4 - 200 A
- 1.10 - 110 kW (U_e: 200 - 480 V)

Applications:

- Conveyor belts
- Fans
- Pumping
- Cooling compressors

Features:

- Ramp time in a range of 1 to 30 s (for starting) or 0 to 30 s (for stopping)
- Starting voltage in the range from 30% to 100% of the mains voltage
- Control voltages: 24 V AC/DC, 110 V AC or SmartWire-DT
- The thermal load on the engine is lower thanks to asymmetric ignition control
- Ambient temperature -40°C to 60°C

Accessory:

- Three-phase commoning links
- Terminal cover
- Feeder unit
- IP2X protection against contact with a finger
- Device fans
- Mounting kit

For more information, visit:
www.Eaton.com/DS7



1.1 Soft starter DS7

System overview 14
DS7 system overview < 32 A 14
DS7 system overview > 32 A 16
Key to type references 17
Description 18
Ordering 19
Basic devices 19
Accessories 20
Engineering 24
General information on Engineering 24
Design with different load cycles 26
Connection examples 28
Assigned switching and protective elements 30
Technical data 32
Dimensions and weights 34

1.1 Soft starter DS7

DS7 < 32 A system overview

System overview

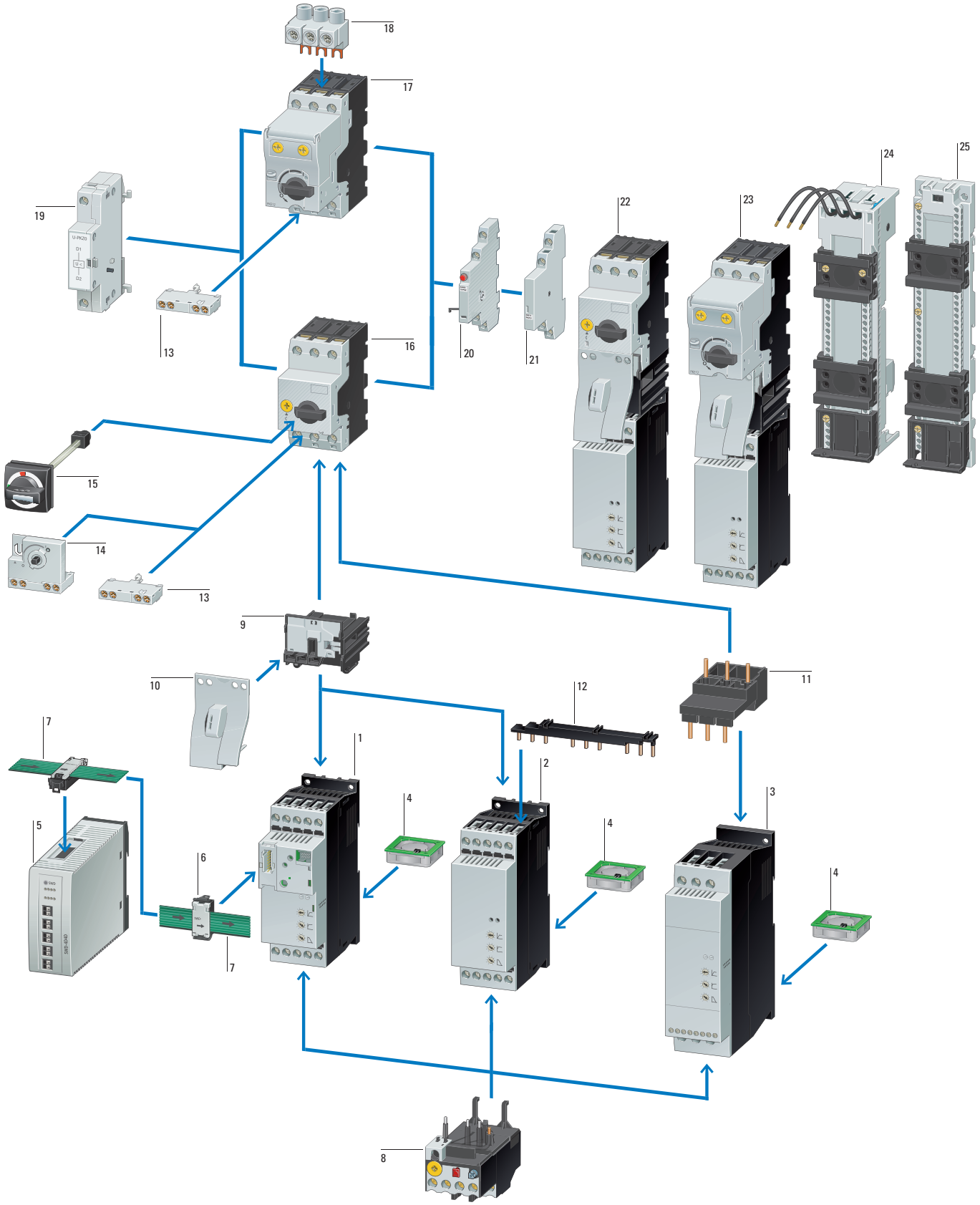

Soft starter DS7 with SmartWire-DT 1
→ Page 19

DS7 soft starters in frame size 1 for assigned motor current up to 12 A 2
→ Page 19

DS7 soft starters in frame size 2 for assigned motor current up to 32 A 3
→ Page 19

DS7-FAN-32 device fan 4
→ Page 23

SmartWire-DT gateway 5
→ Industrial Switchgear catalog

SmartWire-DT external device plug 6
→ Industrial Switchgear catalog

SmartWire-DT flat band conductor 7
→ Industrial Switchgear catalog

Overload relay 8
→ Page 21

PKZM0-XDM wiring set in tool-less plug connection 9 10
→ Page 21

PKZM0-XM wiring set 11
→ Page 21

Three-phase commoning link 12
→ Page 22

Standard auxiliary contact 13
→ Industrial Switchgear catalog

Early-make auxiliary contact 14
→ Industrial Switchgear catalog

Door coupling handle 15
→ Industrial Switchgear catalog

Motor Protective Circuit Breakers PKZM0 16
→ Industrial Switchgear catalog

Motor Protective Circuit Breakers PKE 17
→ Industrial Switchgear catalog

Connection clamp 18
→ Page 22

Voltage release 19
→ Industrial Switchgear catalog

Trip indicator 20
→ Industrial Switchgear catalog

Standard auxiliary contact 21
→ Industrial Switchgear catalog

Motor-starter combination with PKZ 22
→ Industrial Switchgear catalog

Motor-starter combination with PKE 23
→ Industrial Switchgear catalog

Busbar adapter 24
→ Page 21

Top-hat rail adapter 25
→ Page 21

1.1 Soft starter DS7

DS7 > 32 A system overview

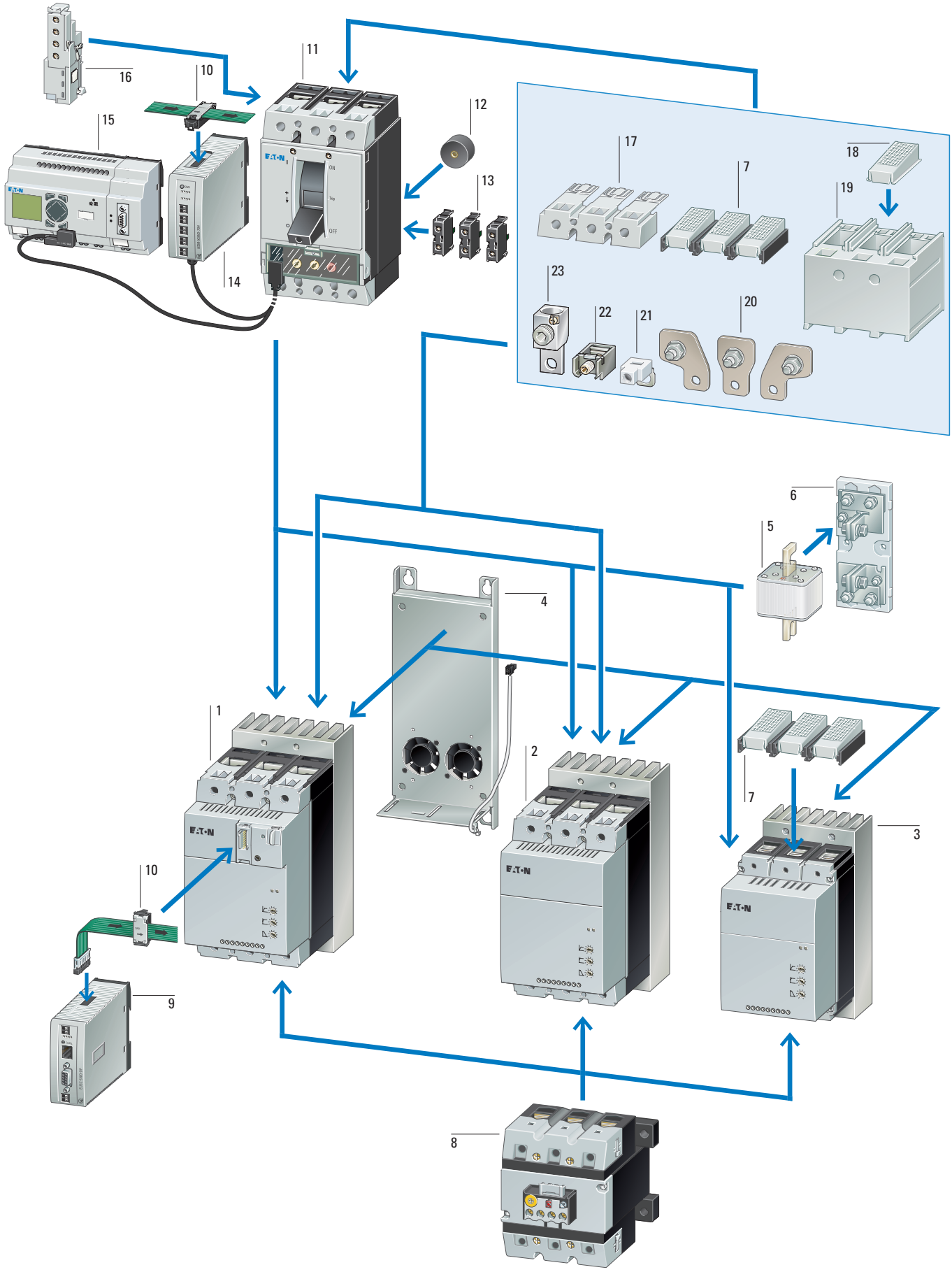

DS7 with SmartWire-DT 1
→ Page 19

DS7 size 4 up to 200 A 2
→ Page 19

DS7 size 3 up to 100 A 3
→ Page 19

Device fans 4
→ Page 23

Superfast semiconductor fuses 5
→ Page 20

Fuse bases for superfast semiconductor fuses 6
→ Page 20

IP2X protection against contact with a finger 7
→ Page 23

Overload relay 8
→ Page 21

Gateways for SmartWire-DT 9
→ Industrial Switchgear catalog

SmartWire-DT external device plug 10
→ Industrial Switchgear catalog

NZM circuit breakers 11
→ Industrial Switchgear catalog

Spacer 12
→ Industrial Switchgear catalog

Standard auxiliary contact/Trip-indicating auxiliary switch 13
→ Industrial Switchgear catalog

NZM communication module for SmartWire-DT 14
→ Industrial Switchgear catalog

Data management interface (DMI module) 15
→ Industrial Switchgear catalog

Voltage release/Early-make auxiliary contact 16
→ Industrial Switchgear catalog

Terminal cover for terminals 17
→ Page 22

IP2X protection against contact with a finger 18
→ Page 23

Terminal cover for cable lugs 19
→ Page 22

Connection width extension 20
→ Industrial Switchgear catalog

Control circuit terminal 21
→ Industrial Switchgear catalog

Frame clamps 22
→ Industrial Switchgear catalog

Tunnel terminals for Al and Cu cable 23
→ Industrial Switchgear catalog

Key to type references

DS7 - 3 4 0 SX 004 N 0 - N

Device series	Generation 7
Number of phases	3 = Three-phase main terminal
Voltage class	4 = 400 V (380 V -15% to 480 V +10%)
Control voltage supply	0 = 24 V AC/DC 2 = 110/230 V AC D = 24 V DC SmartWire-DT
Device version	SX = Standard soft starter with internal bypass relay
Rated operational current	004 = 4 A : 200 = 200 A
Radio interference suppression filters	N = No internal radio interference suppression filter
Protection type	0 = IP20
Options	N = no option D = SmartWire-DT L = extended temperature range up to -40°C

Description







Application

DS7 soft starters are two-phase control soft starters used to soft start three-phase AC motors in applications with a normal operating frequency and a current range of 3 to 200 A (1.1 to 110 kW with a 400 V supply voltage).
Closing transients and DC components during startup are effectively suppressed and guarantee even motor starting.
The special control method (asymmetrical firing control) for the soft start function avoids the DC components (Eaton patent) that are normally produced by two-phase control soft starters. This prevents the formation of an elliptically rotating field, which would otherwise result in the motor not accelerating smoothly and increase starting times unnecessarily. Accordingly, the smooth starting provided by DS7 soft starters is comparable to that provided by three-phase control soft starters.

Functions

Typical fields of application for Series DS7 soft starters are:
- Pump drives: pressure surges are prevented through soft starting reducing mechanical loads on the entire system and lengthening its life.
- Fan drives: soft starting keeps fan belts from slipping, preventing premature wear. This not only lowers operating costs, but also extends the corresponding system's life.
- Conveyor belts: conveyor belts start running smoothly, instead of starting with a jolt. This ensures that any goods being conveyed will not topple over. In addition, it prevents mechanical damage to the belt itself, making it last longer.

Features

- The ramp time can be adjusted by potentiometer within a range of 1 to 30 s (for starting) or 0 to 30 s (for stopping) with a potentiometer
- The start voltage (or start torque) can be adjusted within a range of 30 to 100 percent of the mains voltage with a potentiometer
- Significant reduction in switch-on current, achieved with a short soft start ramp time (min. 1 s) for lamp and heating loads
- Internal bypass relay: switches on automatically after the end of the ramp, bypassing the internal thyristors.
- This makes it possible to comply with radio interference level B without any additional measures.
- The motor's thermal load is smaller than it would be without asymmetric ignition control.
- Designed specifically for long cables

Documentation

Surface mounting and standard mounting procedures are described in the corresponding instruction leaflets and in the manual.

Instruction leaflets:
IL03902003Z: for size 1 devices (up to 12 A motor output)
IL03902004Z: for size 2 devices (up to 32 A motor output)
IL03902005Z: for size 3, 4 devices (up to 200 A motor output)

Manual:
MN03901001Z

You can download the documentation for the DS7 soft starters from the Internet
at: www.moeller.net/support

Communication interface SmartWire-DT

The use of a SmartWire-DT interface completely eliminates the need for conventional control wiring. This has several advantages:
- No incorrect wiring
- Faster wiring
- Cost saving

The interface can be used to send control commands to a DS7-SWD device and modify and diagnose the latter's parameter configuration; in addition, the control electronics can be powered via the SmartWire-DT cable.
The device is controlled with one of three selectable profiles:
- A “start/stop” profile, which should already be familiar from the PKE motor-protective circuit-breaker and contactor combination
- An 8 bit-wide profile for the soft starter, which is provided the same way for the variable frequency drive and features more options
- A control profile comparable to a Profidrive profile, just like the one available for the variable frequency drive.

Regardless of the profile chosen, a DS7-SWD device's parameters can be read and written to at any time by using acyclical services.
DS7-SWD devices make it possible to read and write to all device parameters. The mechanisms of the parameter channel that is described for the drives in the Profidrive profile are used for this purpose. This profile provides a standardized parameter access method for variable frequency drives and soft starters.
It is also possible to overwrite the potentiometer settings on the DS7-SWD, which can come in handy, for instance, when a change made to the machine needs to be undone.

DS7-SWD devices come with a detailed diagnostic system with options that extend far beyond those of wired devices. In addition to having an error log, DS7-SWD devices can detect and report nine different device faults. A warning parameter is used to report any alarm messages present. Moreover, the response to each individual fault can be customized. Finally, there are 35 additional messages for communication errors. Using a DS7 in connection with a PKE opens up new functionalities that were previously thought impossible to implement with a low-cost soft starter and that were reserved to significantly more expensive devices. Combining a PKE unit and a DS7-SWD makes it possible to completely protect the DS7-SWD device against overloads. In addition, it provides a current limiting function and can be used to report thermal loads to higher-level controllers.

Extended temperature range

DS7-340SX…-L soft starters can operate at temperatures as low as -40°C.

Ordering

Rated operational current	Assigned motor output		Catalog Number	Article no.	Catalog Number	Article no.	Std. pack
Device (AC-53)	at 400 V, 50 Hz	at 460 V, 60 Hz					
I_e	P	P					
Soft Starters							
Soft starters for three-phase loads Mains supply voltage (50/60 Hz) U_{LN} 200 - 480 V AC							
			U_C 24 V AC/DC U_s 24 V AC/DC Standard temperature range		**U_C 24 V AC/DC U_s 24 V AC/DC Expanded temperature range down to -40°C**		
4	1.5	2	**DS7-340SX004N0-N**	134847	**DS7-340SX004N0-L**	171740	1 unit
7	3	5	**DS7-340SX007N0-N**	134849	**DS7-340SX007N0-L**	171741	
9	4	5	**DS7-340SX009N0-N**	134910	**DS7-340SX009N0-L**	171742	
12	5.5	10	**DS7-340SX012N0-N**	134911	**DS7-340SX012N0-L**	171743	
16	7.5	10	**DS7-340SX016N0-N**	134912	**DS7-340SX016N0-L**	171744	
24	11	15	**DS7-340SX024N0-N**	134913	**DS7-340SX024N0-L**	171745	
32	15	25	**DS7-340SX032N0-N**	134914	**DS7-340SX032N0-L**	171746	
41	22	30	**DS7-340SX041N0-N**	134916	**DS7-340SX041N0-L**	171747	
55	30	40	**DS7-340SX055N0-N**	134917	**DS7-340SX055N0-L**	171748	
70	37	50	**DS7-340SX070N0-N**	134918	**DS7-340SX070N0-L**	171749	
81	45	60	**DS7-340SX081N0-N**	134919	**DS7-340SX081N0-L**	171750	
100	55	75	**DS7-340SX100N0-N**	134920	**DS7-340SX100N0-L**	171751	
135	75	100	**DS7-340SX135N0-N**	134921	**DS7-340SX135N0-L**	171752	
160	90	125	**DS7-340SX160N0-N**	134922	**DS7-340SX160N0-L**	171753	
200	110	150	**DS7-340SX200N0-N**	134923	**DS7-340SX200N0-L**	171754	
			U_C 110 - 230 V AC U_s 110 - 230 V AC		**U_C 24 V DC U_s 24 V DC**		
4	1.5	2	**DS7-342SX004N0-N**	134925	**DS7-34DSX004N0-D**	134943	1 unit
7	3	5	**DS7-342SX007N0-N**	134927	**DS7-34DSX007N0-D**	134945	
9	4	5	**DS7-342SX009N0-N**	134928	**DS7-34DSX009N0-D**	134946	
12	5.5	10	**DS7-342SX012N0-N**	134929	**DS7-34DSX012N0-D**	134947	
16	7.5	10	**DS7-342SX016N0-N**	134930	**DS7-34DSX016N0-D**	134948	
24	11	15	**DS7-342SX024N0-N**	134931	**DS7-34DSX024N0-D**	134949	
32	15	25	**DS7-342SX032N0-N**	134932	**DS7-34DSX032N0-D**	134950	
41	22	30	**DS7-342SX041N0-N**	134934	**DS7-34DSX041N0-D**	134952	
55	30	40	**DS7-342SX055N0-N**	134935	**DS7-34DSX055N0-D**	134953	
70	37	50	**DS7-342SX070N0-N**	134936	**DS7-34DSX070N0-D**	134954	
81	45	60	**DS7-342SX081N0-N**	134937	**DS7-34DSX081N0-D**	134955	
100	55	75	**DS7-342SX100N0-N**	134938	**DS7-34DSX100N0-D**	134956	
135	75	100	**DS7-342SX135N0-N**	134939	**DS7-34DSX135N0-D**	134957	
160	90	125	**DS7-342SX160N0-N**	134940	**DS7-34DSX160N0-D**	134958	
200	110	150	**DS7-342SX200N0-N**	134941	**DS7-34DSX200N0-D**	134959	

Notes

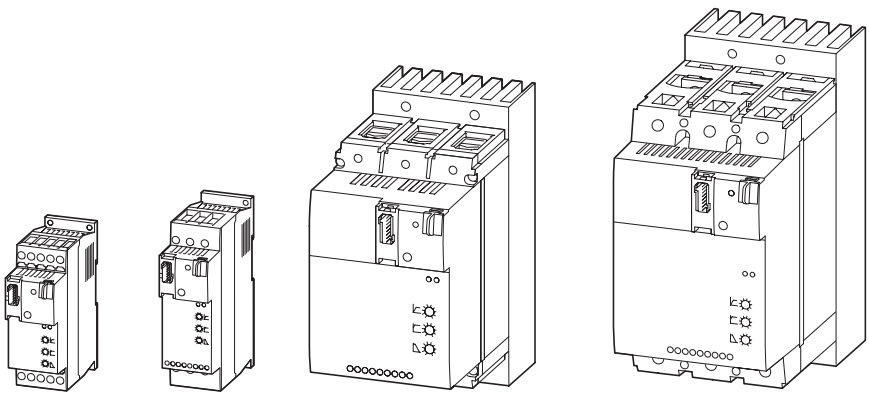

4 - 12 A | 16 - 32 A | 41 - 100 A | 135 - 200 A

Superfast semiconductor fuses

DIN 43653, 690/700 V (IEC/UL)
Pitch measure 80 mm

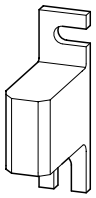

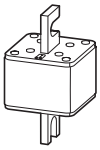

Nominal Current	Max. heat dissipation P_v	Frame size	For use with	Article no.	Std. pack
A	W				
16	5.5	000	DS7-34…SX004N0-…	170M1359	10 unit
25	9	000	DS7-34…SX007N0-…	170M1361	
32	10	000	DS7-34…SX009N0-… DS7-34…SX012N0-…	170M1362	
50	15	000	DS7-34…SX016N0-…	170M1364	
63	16	000	DS7-34…SX024N0-…	170M1365	
80	19	000	DS7-34…SX032N0-…	170M1366	
125	26	S1*	DS7-34…SX041N0-… DS7-34…SX055N0-…	170M3013	
200	45	S1	DS7-34…SX070N0-… DS7-34…SX081N0-… DS7-34…SX100N0-…	170M4008	
315	58	S1	DS7-34…SX135N0-…	170M4010	
400	65	S2	DS7-34…SX160N0-… DS7-34…SX200N0-…	170M5008	

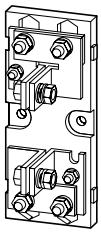

Fuse Bases

	For use with	Article no.	Std. pack
Dimensions (W x H x D) mm 145 x 43 x 50	000, 00	170H1007	3 unit
205 x 88 x 80	S1*, S1, S2, S3	170H3004	

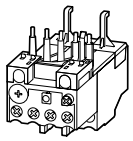

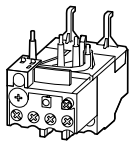







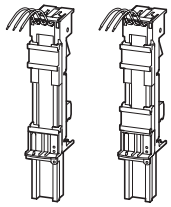

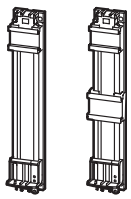

For use with	Catalog Number Article no.	Std. pack
Overload relay		
DS7-34…SX004…	**ZB12-4** 278438	1 unit
DS7-34…SX007… DS7-34…SX009…	**ZB12-10** 278440	
DS7-34…SX012…	**ZB12-12** 278441	
DS7-34…SX016…	**ZB32-16** 278452	
DS7-34…SX024…	**ZB32-24** 278453	
DS7-34…SX032…	**ZB32-32** 278454	
Wiring set		
For DOL Starter		
DS7-34…SX004… DS7-34…SX007… DS7-34…SX009… DS7-34…SX012…	**PKZM0-XDM12** 283149	1 unit
Electric contact module		
DS7-34…SX016… DS7-34…SX024… DS7-34…SX032…	**PKZM0-XM32DE** 239349	5 unit
Busbar adapter		
PKZM0, PKE + DS7...004N... PKZM0, PKE + DS7...007N... PKZM0, PKE + DS7...009N... PKZM0, PKE + DS7...012N...	**BBA0L-25** 142526	1 unit
PKZM0, PKE + DS7...016N... PKZM0, PKE + DS7...024N... PKZM0, PKE + DS7...032N...	**BBA0L-32** 142527	1 unit
Top-hat rail adapter		
45 mm wide adapter plate		
PKZM0, PKE + DS7...004N... PKZM0, PKE + DS7...007N... PKZM0, PKE + DS7...009N... PKZM0, PKE + DS7...012N...	**PKZM0-XC45L** 142529	1 unit
PKZM0, PKE + DS7...016N... PKZM0, PKE + DS7...024N... PKZM0, PKE + DS7...032N...	**PKZM0-XC45L/2** 142570	1 unit

	For use with	Catalog Number Article no.	Std. pack	Notes
	Three-phase commoning links			
	Protected against accidental contact, short-circuit proof, U_e = 690 V, I_u = 35 A can be extended by rotating installation ($\sum I_u \leq 35$ A)			
	DS7-34…SX004… DS7-34…SX007… DS7-34…SX009… DS7-34…SX012…	**DILM12-XDSB0/3** 240084	5 unit	For the primary side of DS7 Suitable for 3 DS7 soft starters Length 112 mm
		**DILM12-XDSB0/4** 240085		For the primary side of DS7 Suitable for 4 DS7 soft starters Length 157 mm
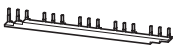		**DILM12-XDSB0/5** 240086		For the primary side of DS7 Suitable for 5 DS7 soft starters Length 202 mm
	Feeder unit			
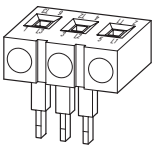	DS7-34…SX004… DS7-34…SX007… DS7-34…SX009… DS7-34…SX012…	**DILM12-XEK** 240083	5 unit	For three-phase commoning link, protected against accidental contact, U_e = 690 V, I_u = 35 A. Terminal capacity: stranded 2.5…-16 mm² Flexible with ferrule 2.5…16 mm² AWG14…8
	Terminal cover			
	Type contains parts for a terminal located at top or bottom for 3 pole circuit-breakers.			
knockout **For box terminal** 	DS7-34…SX041… DS7-34…SX055… DS7-34…SX070… DS7-34…SX081… DS7-34…SX100…	**NZM1-XKSFA** 100780	1 unit	Enhancement of the busbar tag shroud (simple protection against contact with a finger). Cannot be combined with NZM-XSTK control circuit terminal.
knockout 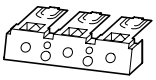	DS7-34…SX135… DS7-34…SX160… DS7-34…SX200…	**NZM2-XKSFA** 104640	1 unit	Enhancement of the busbar tag shroud (simple protection against contact with a finger). Protection when reaching into the cable connection area with the connection of cables in the box terminal. With two conductors max cross-section 22 mm² or AWG4. Cannot be combined with NZM-XSTK control circuit terminal.
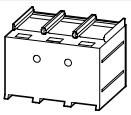	DS7-34…SX135… DS7-34…SX160… DS7-34…SX200…	**NZM2-XKSA** 260038	1 unit	Busbar tag shroud where cable lugs, busbars or tunnel terminals are used. When using insulated conductor material to IP1X.

	For use with	Catalog Number Article no.	Std. pack	Notes
IP2X protection against contact with a finger				
Type contains parts for a terminal located at top or bottom for 3 pole circuit-breakers. Enhancement of the busbar tag shroud to IP2X.				
For box terminal 	NZM2, PN2, N2	**NZM2-XIPK** 266773	1 unit	Protection when reaching into the cable connection area with the connection of cables in the box terminal. With 2 conductors max cross section 25 mm^2 or AWG4. Cannot be combined with NZM-XSTK control circuit terminal.
for cover NZM2-XKSA or NZM2 or NZM2...(C)NA und N(S)2...NA 	NZM2, PN2, N(S)2	**NZM2-XIPA** 266777	1 unit	When mounting NZM2-..-(C)NA or NZM...-NA the following applies: with 2 conductors max cross section 25 mm^2 or AWG4.
Mounting kit				
when using covers NZM1-XKSFA and NZM2-XKSA				
	DS7-34xSX041N0-x DS7-34xSX055N0-x DS7-34xSX070N0-x DS7-34xSX081N0-x DS7-34xSX100N0-x DS7-34xSX135N0-x DS7-34xSX160N0-x DS7-34xSX200N0-x	**DE6-MNT-NZM** 107323	1 unit	–
Device fans				
Device fan for increasing the load cycle (more starts per hour higher or longer-lasting starting current)				
	DS7-34…SX004… DS7-34…SX007… DS7-34…SX009… DS7-34…SX012… DS7-34…SX016… DS7-34…SX024… DS7-34…SX032…	**DS7-FAN-032** 135553	1 unit	Flush-mounted fan
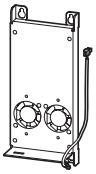	DS7-34…SX041… DS7-34…SX055… DS7-34…SX070… DS7-34…SX081… DS7-34…SX100…	**DS7-FAN-100** 169021		Bottom fans
	DS7-34…SX135… DS7-34…SX160… DS7-34…SX200…	**DS7-FAN-200** 169022		
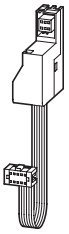	**Communication cable PKE**			
	6 pole Prefabricated with two plugs For connecting the PKE to DS7-SWD			
	DS7…SWD	**PKE32-COM** 168970	1 unit	
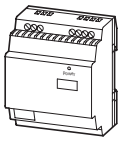	**Switched-mode power supply units easyPOW**			
	Single-phase Rated input voltage 100 - 240 V AC Rated output voltage 24 V DC (± 3%) Rated output current: 1.25 A			
		EASY400-POW 212319	1 unit	

Engineering

Generalized phase control of motor voltage

By means of generalized phase control, the soft starter adjusts the grid's voltage (U_{LN}) smoothly from an adjustable start value to 100% of the rated value U_{LN}.

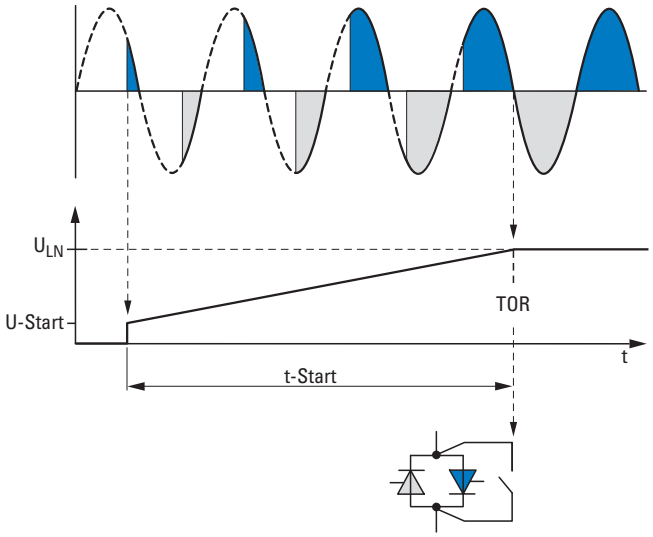

U_{LN} = mains supply voltage
U-Start: start voltage
t-Start: Ramp time of the voltage change at start
TOR (Top of Ramp) = Signals the end of the set "t-Start" ramp time (output voltage U_2 = mains supply voltage U_{LN}). The internal bypass contacts are closed after this.

This voltage control enables the inrush current of a three-phase asynchronous motor to be limited and its starting torque to be reduced. This enables a smooth and jerk-free increase in torque, adjusted in line with the machine's load behavior. This has a positive effect on the lifespan, operating behavior, and operating processes of the mechanical equipment and prevents negative effects such as:

- Impacting of cog edges in the gearbox
- Pressure surge in pipe systems (water impact),
- Slipping of V belts or
- Jitter with conveyor systems.

In DS7 and S801+/S811+ series soft starters, generalized phase control is achieved with anti-parallel thyristors that are bypassed for continuous operation by using bypass contacts (TOR = Top Of Ramp) after the time for a time-triggered voltage change (t-Start) has elapsed. The transition resistance of these bypass contacts is considerably lower than the transition resistance of the power semiconductors. This reduces the heat dissipation in the soft starter and extends the lifespan of the power semiconductors.
As well as the time-controlled startup of a motor, the soft starter also enables a time-controlled reduction of the motor voltage and thus a controlled stopping of the motor.

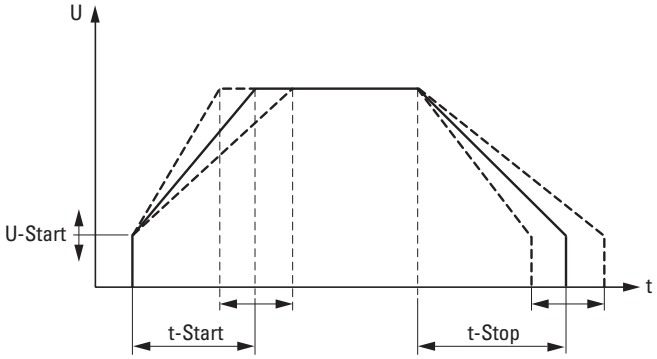

The output voltage of a soft starter determines the torque of the motor (M ~ U_2). Because of this, it is necessary to make sure that, when a machine starts up, the selected U-Start start voltage is not too low and the t-Start ramp time for the linear voltage change is set to be as short as possible.

Please note:

- Long ramp times (t-Start) will produce a soft startup behavior, but will also result in a higher thermal load on the thyristors
- A high start voltage (U-Start) will produce a higher torque and a high starting current
- Set the lowest possible start voltage and the shortest possible start ramps.

The following pages include application and setting configuration examples for DS7 soft starters.
If controlled deceleration is required, t-Stop must be set to a longer time than would be necessary for the machine to coast freely based on the load. For the thyristors, the controlled deceleration constitutes a load comparable to that produced during startup. If, for example, the deceleration ramp is activated on a soft starter with a maximum of 10 permissible starts per hour, the number of permissible starts will be reduced to five per hour (plus five stops within that hour).

Selection Criteria

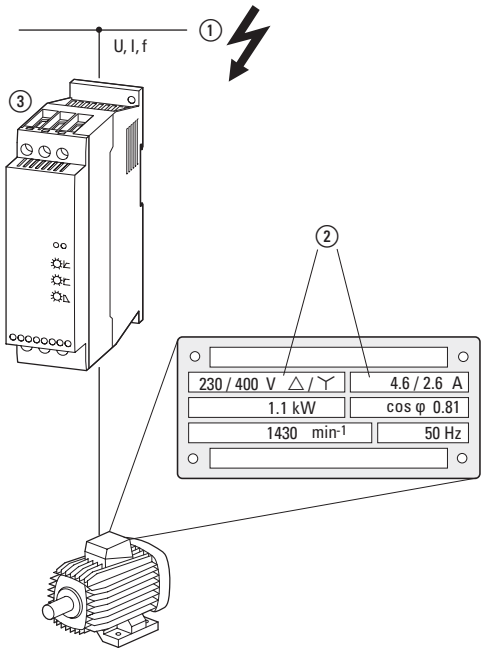

Soft starters ③ are selected based on the supply voltage of the corresponding grid ① (U_{LN}) and the rated operational current of the assigned motor ②. The motor's circuit configuration (Δ/Y) must be selected in such a way that it matches the supply voltage. In addition, the soft starter's rated operational current (I_e) must be at least equal to that of the motor.

Additional selection criteria include:
- Ambient air temperature (rated value +40°C)
- The number of starts per hour (< 10 starts, take stops into account)
- Load torque (quadratic, linear)
- Starting torque

Centrifugal pumps, centrifugal fans, simple and smooth-running conveyor belts and traction drives, and circular saws and ribbon saws are some of the typical applications for which soft starters are used. Reciprocating compressors, mixers, mills, crushers, and lifting gear are instead categorized as heavy starting duty machines. In this case, the soft starter must be oversized in terms of its overload capacity.

In the case of applications that are typical for a soft starter, such as water pumps (centrifugal pumps), and that feature comparable operational data (operating frequency, run-up time, and/or inrush currents) a soft starter can be assigned directly to the motor on the basis of the rated operational current.

Example:
- 15 kW Pump motor
- 400 V
- Rated operational current 29 A
- About three times the starting current (I_{LRP} = 87 A),
- A maximum of 10 starts per hour
- 5-second start-up time,
- ambient air temperature 40°C.

=> DS7-34…032… (I_e = 32 A)

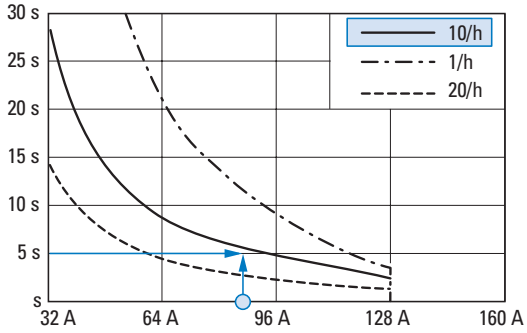

When different operating frequencies, acceleration and/or starting currents are involved, the thermal capacity of the DS7 soft starter must be taken into account in the design. This can be done by using the following diagrams or by calculating the I^2t values. These I^2t values define the corresponding load capacity and overload cycle and are defined in product standard IEC/EN 60947-4-2.

DS7-34…SX032…soft starter:
- 32 A: AC-53a: 3-5: 75-10
- Rated operational current (I_e) 32 A
- Load cycle AC-53a
- 300% overcurrent for 5 seconds
- 75% duty factor with 10 starts per hour

The resulting I2t value is: $(3 \times 32\ A)^2 \times 5\ s = 46\ 080\ A^2s$
The maximum I^2t value of the connected motor load must be smaller:
$(3 \times 29\ A)^2 \times 5\ s = 37\ 845\ A^2s$
Soft starter DS7-34…SX032… is the right choice for this application.

If the motor had a higher inrush current, e.g., 5 times the starting current, a more powerful soft starter would have to be selected:
- Motor inrush current:
  $I_{LRP} = 5 \times 29 = 145\ A$, I^2t value = $(5 \times 29\ A)^2 \times 5\ s = 105\ 125\ A^2s$
- DS7-34…SX041…: 41 A:
  AC-53a: 3-5: 75-10
  => $(3 \times 41\ A)^2 \times 5\ s = 75\ 645\ A^2s$

Soft starter DS7-34…SX041… cannot meet the required startup and load conditions required in this case.

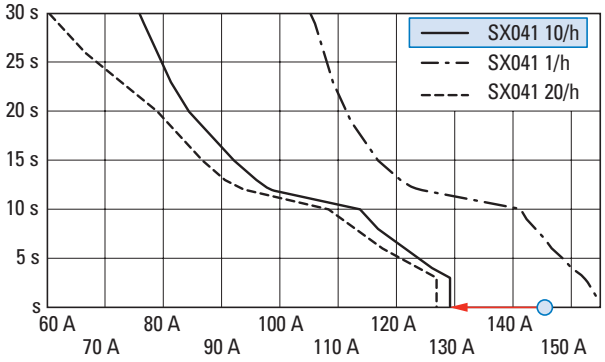

DS7-34…SX055…:
55 A: AC-53a: 3-5: 75-10
=> $(3 \times 55\ A)^2 \times 5\ s = 136\ 125\ A^2s$
Soft starter DS7-34…SX055…, however, does meet the required startup and load conditions.

Note: As the following diagram shows, the DS7-34…SX055… unit can handle even more demanding startup and load requirements, e.g., up to 20 starts per hour and longer start-up times (up to 10 seconds).

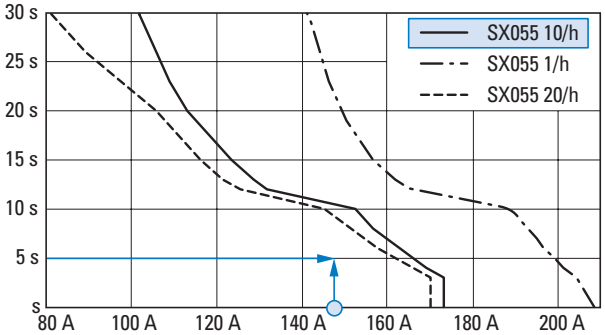

Design with different load cycles

DS7-34x...SX004...

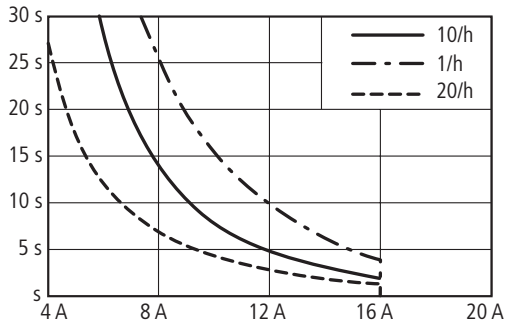

DS7-34x...SX007...

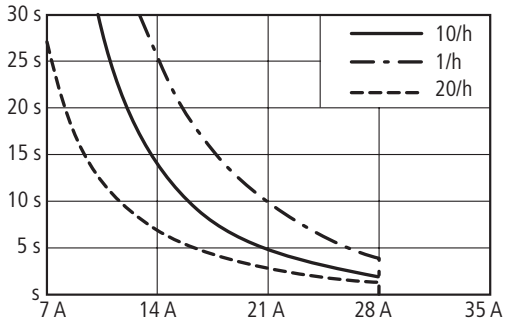

DS7-34x...SX009...

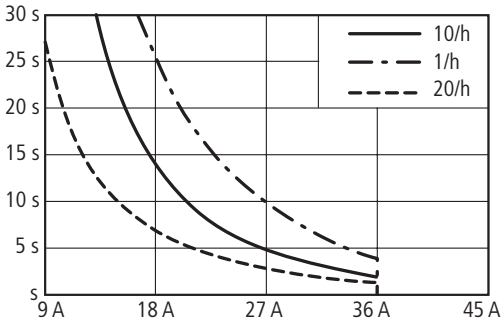

DS7-34x...SX012...

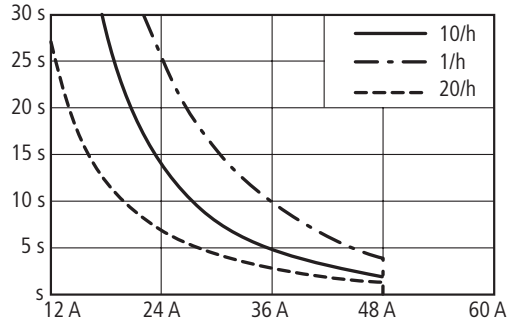

DS7-34x...SX016...

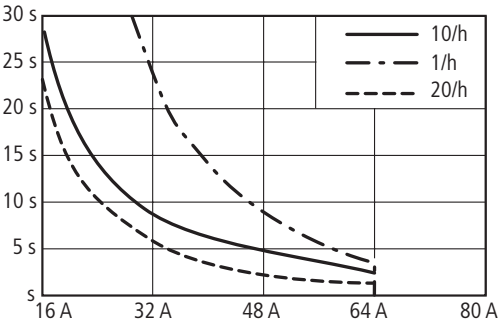

DS7-34x...SX024...

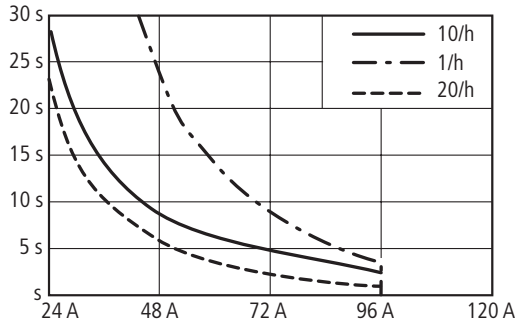

DS7-34x...SX032E...

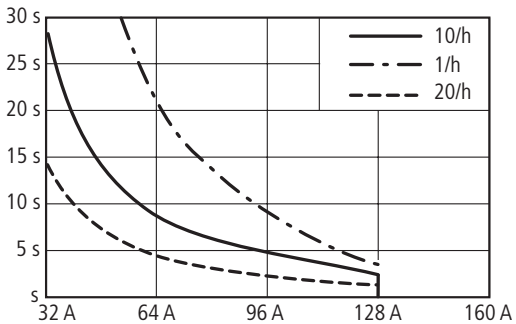

DS7-34...SX041N0-...

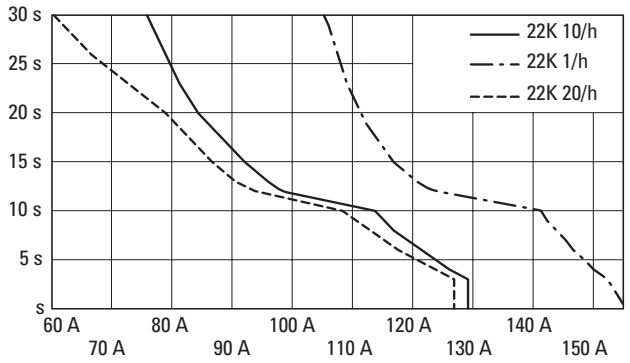

DS7-34...SX055N0-...

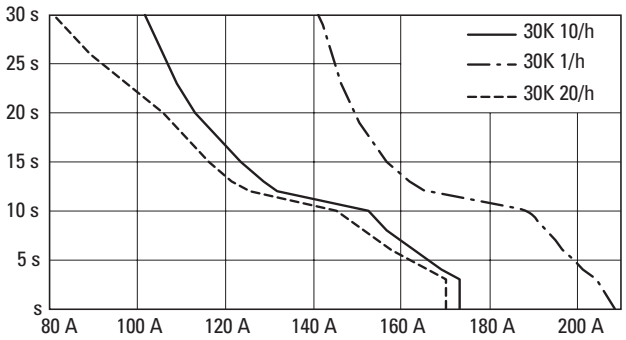

DS7-34...SX070N0-...

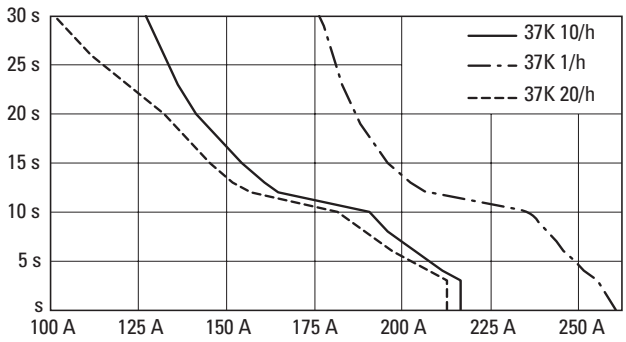

DS7-34...SX081N0-...

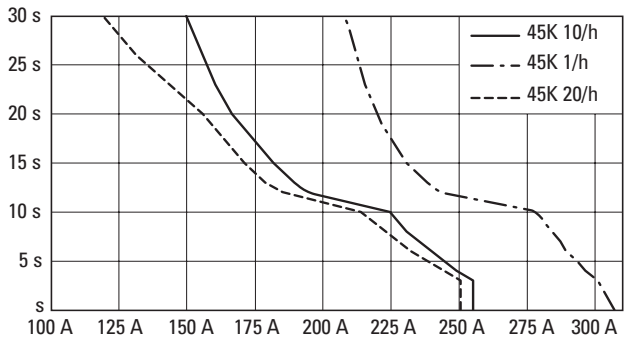

DS7-34...SX100N0-...

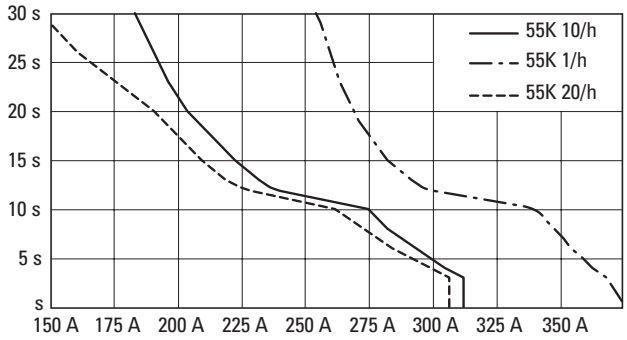

DS7-34...SX135N0-...

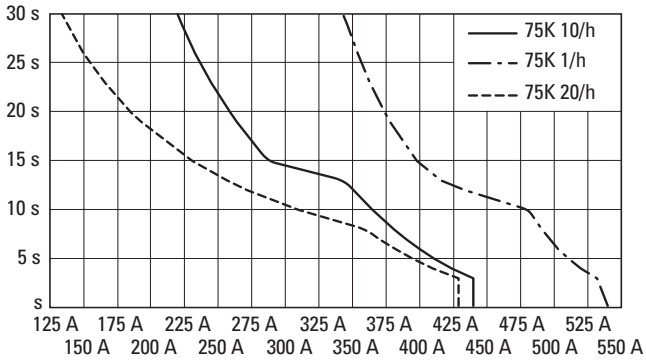

DS7-34...SX160N0-...

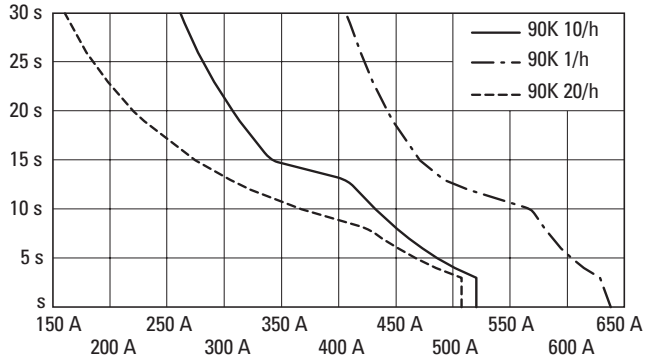

DS7-34...SX200N0-...

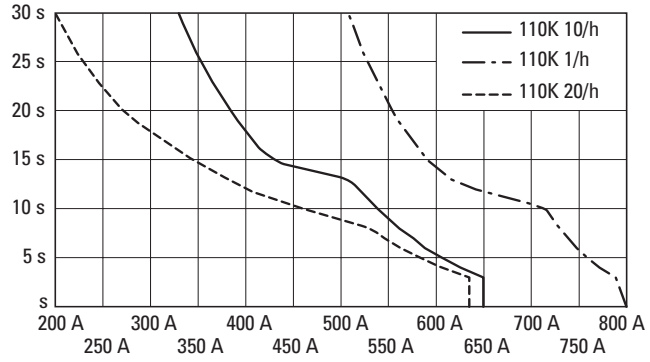

1.1 Soft starter DS7

Connection examples

Standard connection up to 12 A

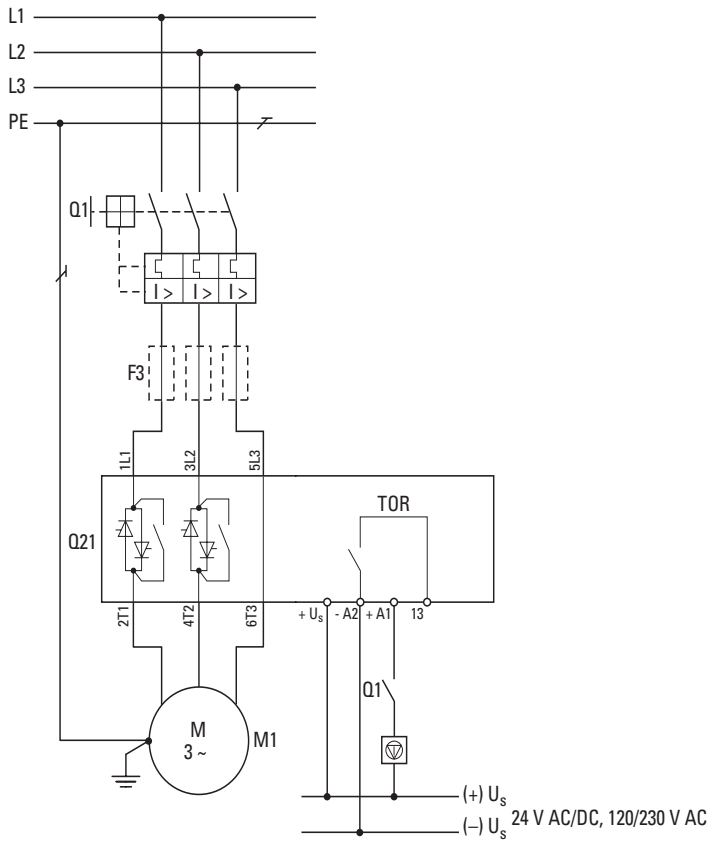

Standard connection up to 32 A

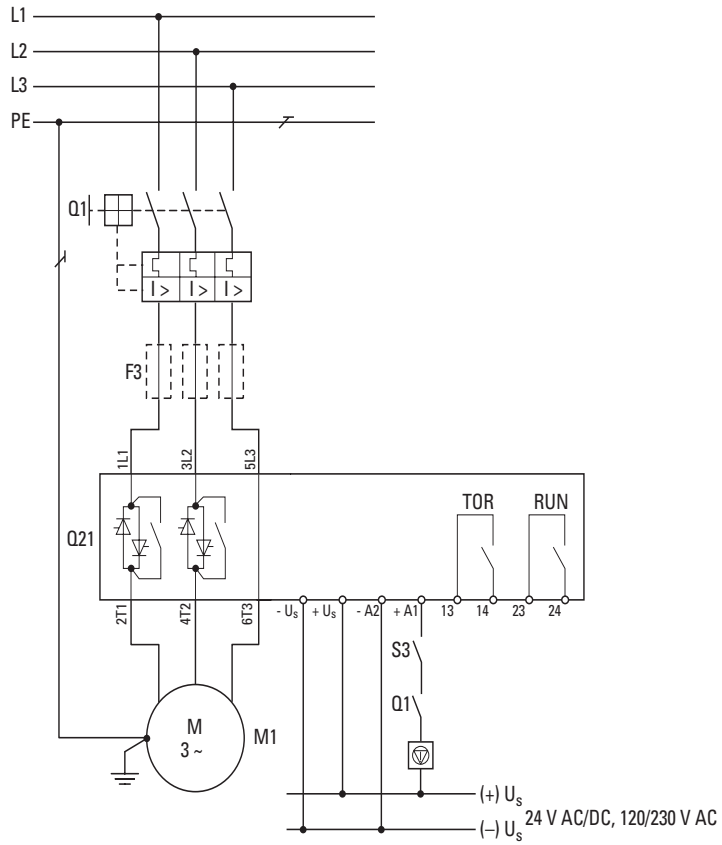

Standard connection 41 - 200 A

With Emergency switching off function according to IEC/EN 60 204-1 and VDE 0113 Part 1

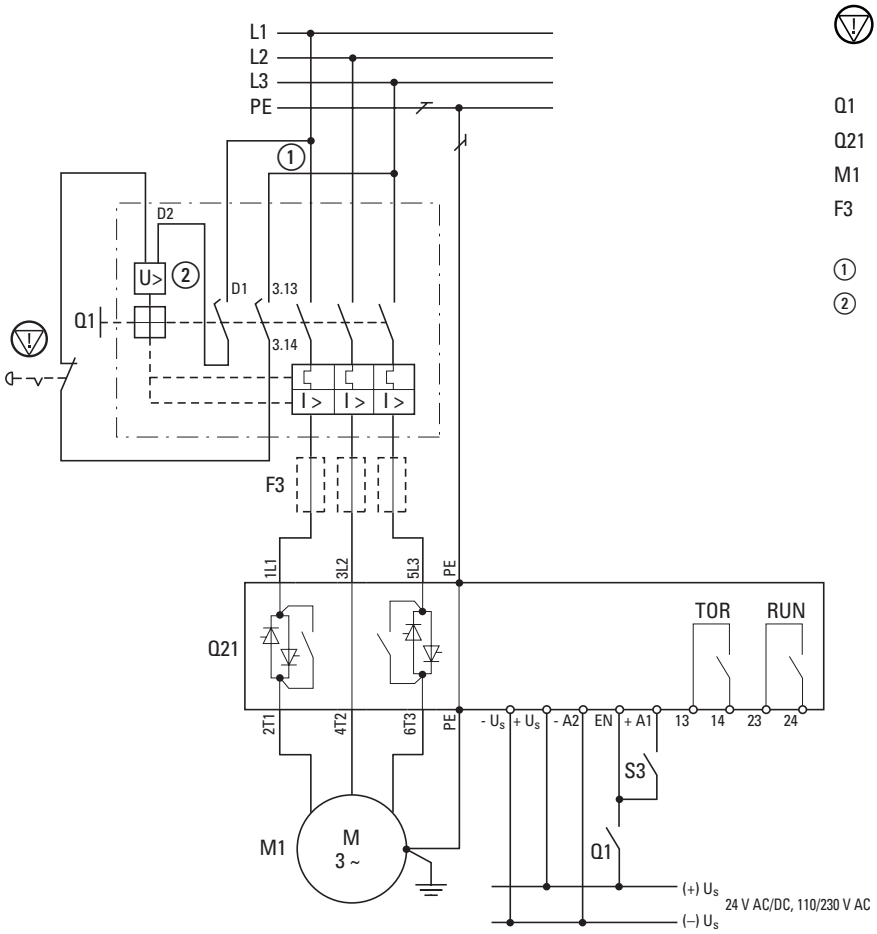

= EMERGENCY SWITCHING OFF

Q1 = Cable and motor protection (NZM (NZM1, NZM2)
Q21 = Soft starter DS7
M1 = Motor
F3 = superfast semiconductor fuse, optional for type 2 coordination (in addition to Q1)
① Control circuit terminal
② Undervoltage release with early-make auxiliary contact

Soft starter DS7

Assigned switching and protective elements

Assigned Motor output at		Rated operational current[1]		**Catalog Number** Soft Starters (device to be selected)	Soft starter function
400 V	480 V	Motor	Soft Starters		Line protection[2]
P	P	I_e	I_e		Type 1 coordination
kW	HP	A	A		
				Soft starters for three-phase mains connection, low operating frequency, (5 s, 3 x I_e, 10 starts/h)	
1.5	2	3.6	4	**DS7-34xSX004N0-x**	PKZM0-4 (+ CL-PKZ0)
3	3	6.6	7	**DS7-34xSX007N0-x**	PKZM0-10 (+ CL-PKZ0)
4	5	8.5	9	**DS7-34xSX009N0-x**	PKZM0-10 (+ CL-PKZ0)
5.5	7.5	11.3	12	**DS7-34xSX012N0-x**	PKZM0-12 (+ CL-PKZ0)
7.5	10	15.2	16	**DS7-34xSX016N0-x**	PKZM0-16 (+ CL-PKZ0)
11	15	21.7	24	**DS7-34xSX024N0-x**	PKZM0-25 (+ CL-PKZ0)
15	20	29.3	32	**DS7-34xSX032N0-x**	PKZM0-32 (+ CL-PKZ0)
22	25	41	41	**DS7-34xSX041N0-x**	NZMN1-M50 / PKZM4-50
30	30	55	55	**DS7-34xSX055N0-x**	NZMN1-M63 / PKZM4-58
37	40	68	70	**DS7-34xSX070N0-x**	NZMN1-M80
45	50	81	81	**DS7-34xSX081N0-x**	NZMN1-M100
55	60	99	100	**DS7-34xSX100N0-x**	NZMN1-M100
75	75	134	135	**DS7-34xSX135N0-x**	NZMN2-M160
90	100	160	160	**DS7-34xSX160N0-x**	NZMN2-M200
110	125	196	200	**DS7-34xSX200N0-x**	NZMN2-M200

Notes

[1] Rated operational current based on the load cycle specified here.
[2] Indicates the circuit-breaker required for the indicated load cycle. At different duty cycles (operating frequency, overcurrent, overcurrent time, duty factor), this value changes and must then be adapted accordingly.
[3] An external overload relay is required if the main contacts should not be disconnected in the event of an overload and a controlled soft stop is desired instead.
[4] A mains contactor is not required. Disconnection characteristics in accordance with VDE can only be ensured with the specified circuit-breaker.
[5] The superfast semiconductor fuses protect the soft starters from motor-side short-circuits. This can not, however, prevent damage caused by voltage peaks, for example through lightning strike.

Soft starter function with soft stop in case of overload		Mains contactor	Semiconductor contactor (optional, in addition to the protective devices for type 1 coordination, required for type 2 coordination) [5]	
Line protection[2] Type 1 coordination	Overload relays[3]	optional[4]	Fuses	Fuse holders
			Quantity x Part no.	Quantity x Part no.
PKM0-4 (+ CL-PKZ0)	ZB12-4	DILM7	3 × **170M1359**	3 × **170H1007**
PKM0-10 (+ CL-PKZ0)	ZB12-10	DILM9	3 × **170M1361**	3 × **170H1007**
PKM0-10 (+ CL-PKZ0)	ZB12-10	DILM9	3 × **170M1362**	3 × **170H1007**
PKM0-12 (+ CL-PKZ0)	ZB12-12	DILM12	3 × **170M1362**	3 × **170H1007**
PZM0-16 (+ CL-PKZ0)	ZB32-16	DILM17	3 × **170M1364**	3 × **170H1007**
PZM0-25 (+ CL-PKZ0)	ZB32-24	DILM25	3 × **170M1365**	3 × **170H1007**
PZM0-32 (+ CL-PKZ0)	ZB32-32	DILM32	3 × **170M1366**	3 × **170H1007**
NZMN1-M50 / PKZM4-50	ZB65-40+ZB65-XEZ	DILM50	3 × **170M3013**	3 × **170H3004**
NZMN1-M63 / PKZM4-58	ZB65-57+ZB65-XEZ	DILM65	3 × **170M3013**	3 × **170H3004**
NZMN1-M80	ZB150-70/KK	DILM80	3 × **170M4008**	3 × **170H3004**
NZMN1-M100	ZB150-100/KK	DILM95	3 × **170M4008**	3 × **170H3004**
NZMN1-M100	ZB150-100/KK	DILM115	3 × **170M4008**	3 × **170H3004**
NZMN2-M160	ZB150-150/KK	DILM150	3 × **170M4010**	3 × **170H3004**
NZMN2-M200	Z5-160/FF250	DILM185	3 × **170M5008**	3 × **170H3004**
NZMN2-M200	Z5-220/FF250	DILM225	3 × **170M5008**	3 × **170H3004**

Technical specifications

		Supply voltage U_c		
		24 V AC/DC	120/230 V AC	+24 V
		DS7-340…	DS7-342…	DS7-34D… (SmartWire-DT)
General				
Radio interference level		B	"A" group 1	B
Actuating circuit				
Regulator supply voltage U_s				
Voltage	V	+24 +10%/-15%	120 (-15%) - 230 (+10%)	+24 DC +10%/-15%
Frequency at V AC	Hz	(50/60)	50/60	
Current consumption no-load losses (without device fan)	mA	50	50	50
Current consumption operation (without device fan)	mA	130	100	130
Current consumption peak performance (Close bypass contacts, without device fan)	mA	130	130	130
Fan current consumption (operation)	mA	50	50	50
Control voltage range U_c				
DC operated	V DC	24 +10%/-15%		24 +10%/-15%
AC operated	A DC	24 +10%/-15%	120 (-15%) - 230 (+10%)	
Current consumption per input (+A1, EN)	mA	1.6	4	1.6
Pick-up voltage (High signal)				
DC operated	V DC	17.3 - 27		17.3 - 27
AC operated	V AC	17.3 - 27	~100 - 253	
Drop-out voltage (Low signal)				
DC operated	V DC	0 - 3		0 - 3
AC operated	V AC	0 - 3	0 - 28	
Pick-up time				
DC operated	ms	250		250
AC operated	ms	250	250	
Falling time				
DC operated	ms	350		350
AC operated	ms	~0	350	

Size	Unit	Frame size 1: 4 - 12 A	Frame size 2: 16 - 32 A	Frame size 3: 41 - 100 A	Frame size 4: 135 - 200 A
General					
Dimensions W x H x D	mm	45 x 130 x 95	45 x 150 x 118	93 x 175 x 139	108 x 215 x 178
Weight	kg	0.35	0.4	1.8	3.7
Terminal capacities					
Cables (box terminal)					
Solid	mm^2	1 x (0.75 - 4) 2 x (0.75 - 2.5)	1 x (0.75 - 16) 2 x (0.75 - 10)	1 x (25 - 70) 2 x (6 - 25)	1 x (4 - 185) 2 x (4 - 70)
Flexible with ferrule	mm^2	1 x (0.75 - 2.5) 2 x (0.75 - 2.5)	1 x (0.75 - 16) 2 x (0.75 - 10)		
Stranded	mm^2		1 x 16 2 x 16	1 x (25 - 70) 2 x (6 - 25)	1 x (4 - 185) 2 x (4 - 70)
Solid or stranded	AWG	1 x (18 - 10) 2 x (18 - 10)	1 x (14 - 8) 2 x (14 - 8)	1 x (12 - 2/0)	1 x (12 - 350) 2 x (12 - 00)
Flat conductor					
minimum	mm			2 x 9 x 0.8	2 x 9 x 0.8
maximum	mm			9 x 9 x 0.8	10 x 16 x 0.8
Tightening torque	Nm	1.2	3.2	9 (> 10 mm^2) 6 (≦ 10 mm^2)	14 (> 10 mm^2) 5 (≦ 10 mm^2)
Control cables					
Solid	mm^2	1 x (0.75 - 4) 2 x (0.75 - 2.5)	1 x (0.75 - 4) 2 x (0.75 - 1.5)	1 x (0.75 - 4) 2 x (0.75 - 1.5)	1 x (0.75 - 4) 2 x (0.75 - 1.5)
Flexible with ferrule	mm^2	1 x (0.75 - 2.5) 2 x (0.75 - 2.5)	1 x (0.75 - 2.5) 2 x (0.75 - 1.5)	1 x (0.75 - 2.5) 2 x (0.75 - 1.5)	1 x (0.75 - 2.5) 2 x (0.75 - 1.5)
Stranded	mm^2				
Solid or stranded	AWG	1 x (18 - 10) 2 x (18 - 10)	1 x (18 - 14) 2 x (18 - 16)	1 x (18 - 14) 2 x (18 - 16)	1 x (18 - 14) 2 x (18 - 16)
Tightening torque	Nm	1.2	0.6	0.6	0.6
Screwdriver (flat blade)	mm	0.6 x 3.5	0.6 x 3.5	0.6 x 3.5	0.6 x 3.5
Actuating circuit					
Relay outputs					
Qty.		1 (TOR)	2 (TOR, RUN/READY)[1)]	2 (TOR, RUN/READY)[1)]	2 (TOR, RUN/READY)[1)]
Max. voltage range	V AC/DC	= U_s	250	250	250
Max. load current	A	1	1	1	1

Notes [1)] Does not apply for soft starter DS7 with SmartWire-DT (DS7-…-D).

Dimensions and weights

Frame size 1

Dimension drawing DS7 without SWD – Size 1 (up to 12 A)

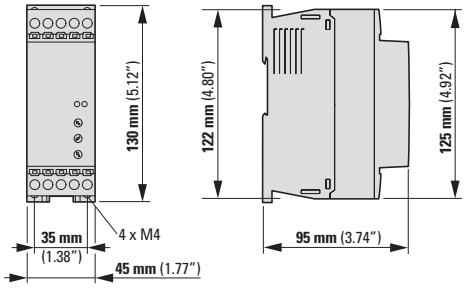

Dimension drawing DS7 with SWD – Size 1 (up to 12 A)

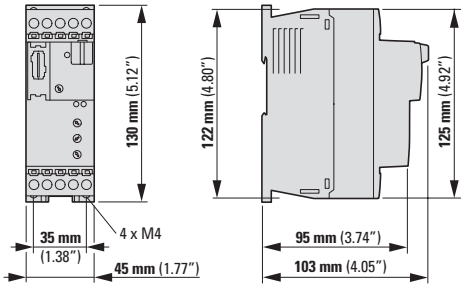

DS7-34…SX…	Ø	Weight
	mm	kg
…003…	4	DS7-340…: 0.3
…004…		DS7-340…: 0.3
…005…		DS7-34D…-D: 0.33
…007…		
…009…		
…012…		

Frame size 2

Dimension drawing for DS7 without SWD – Size 2 (16 - 32 A)

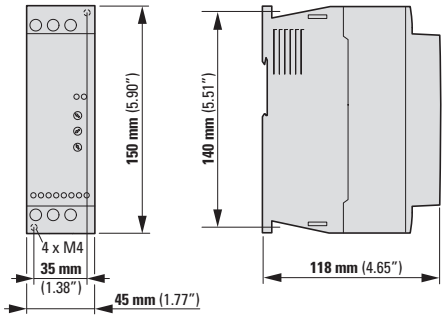

Dimension drawing for DS7 with SWD – Size 2 (16 - 32 A)

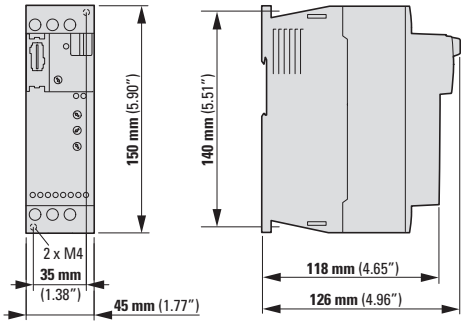

DS7-34…SX…	Ø	Weight
	mm	kg
…016…	4	0.4
…024…		
…032…		

Frame size 3

Dimension drawing for DS7 without SWD – Size 3 (41 - 100 A)

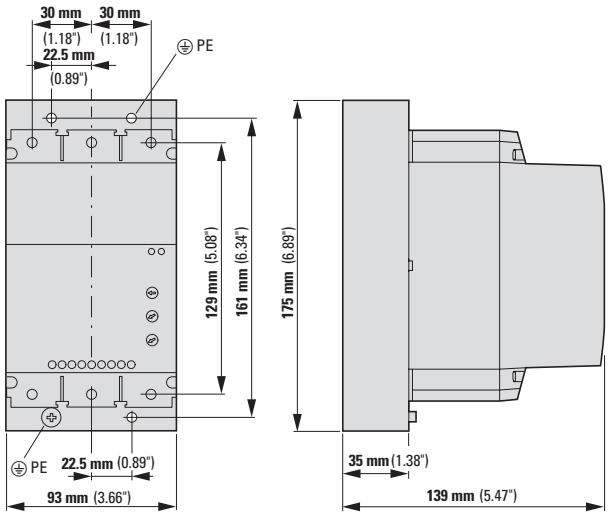

Dimension drawing for DS7 with SWD – Size 3 (41 - 100 A)

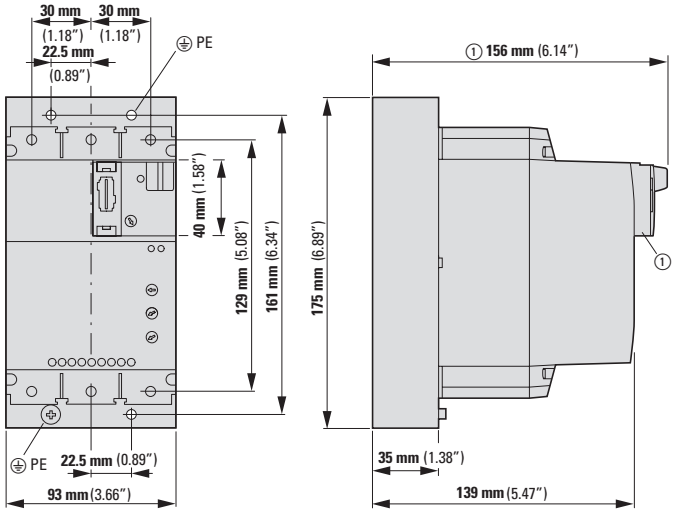

DS7-34…SX…	Ø	Weight
	mm	kg
…036…	4	1.8
…041…		
…055…		
…070…		
…081…		
…100…		

Frame size 4

Dimension drawing for DS7 without SWD – Size 4 (135 - 200 A)

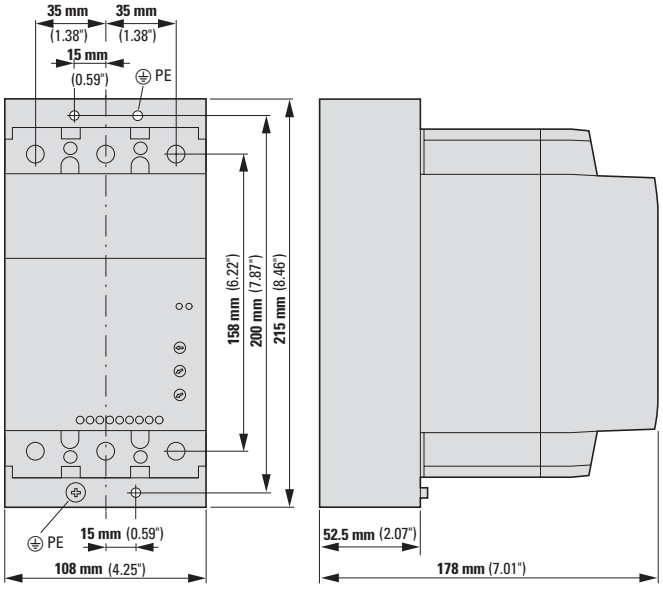

Dimension drawing for DS7 with SWD – Size 4 (135 - 200 A)

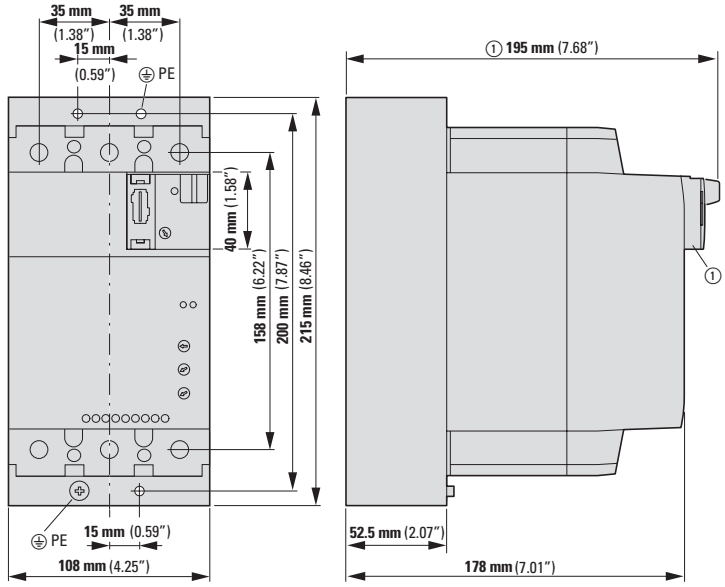

DS7-34…SX…	Ø	Weight
	mm	kg
…135…	5	3.4
…160…		
…200…		

DS7-FAN-... device fan

DS7-FAN-100

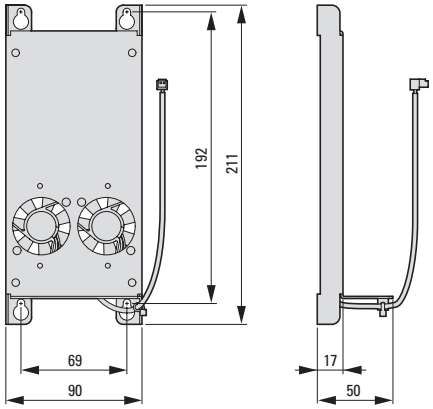

DS7-FAN-200

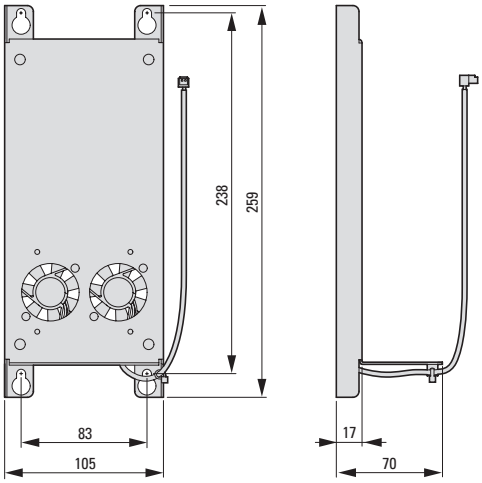



Soft starter S811+
Powerful presence in a small design

The unparalleled performance and features behind S811+ soft starters build upon the proven capabilities of our soft starters. With only five frame sizes and rated operational currents of 37 A to 1000 A for supply voltages of 200 V to 690 V, S811+ units are some of the world's smallest compact soft starters.
These three-phase-controlled soft starters, which feature an internal bypass and comprehensive monitoring and protection mechanisms, provide a soft start and ensure that three-phase motors can remain in continuous operation safely and reliably even in applications with large load torques.

S811+ soft starters are not just designed for standard applications, make a strong case with their ease of use, and feature a digital control and display unit that provides access to advanced functions for sophisticated applications.
In addition, S811+ units can be used not only in a standard line (outside the delta) configuration, but also with an inside-the-delta configuration.

Performance range:

- 37 - 1000 A
- 18.5 - 750 kW (U_e: 200 - 690 V)

Applications:

- Pumps and fans in HVAC applications
- Water/wastewater industry
- Mixers
- Crushers
- Underground applications
- Chemical industry

Features:

- Electronic overload protection
- Programmable relays and inputs
- Standard line or inside-the-delta configuration
- Pump algorithm for minimizing water hammer
- Extensive range of functionalities with comprehensive monitoring and protection functions
- Compact menu structure for easy commissioning, maintenance, and monitoring

Accessory:

- Ethernet/IP, Modbus TCP communication modules
- External keypad with display
- Terminal blocks and terminal cover
- Mounting frame
- Surge protection

For more information, visit:
www.Eaton.com/S811



1.2 Soft starter S811+

System overview 40
Description 41
Key to type references 42
Ordering 43
Basic devices 43
Accessories 44
Engineering 46
Technical data 47
Dimensions and weights 51

System overview

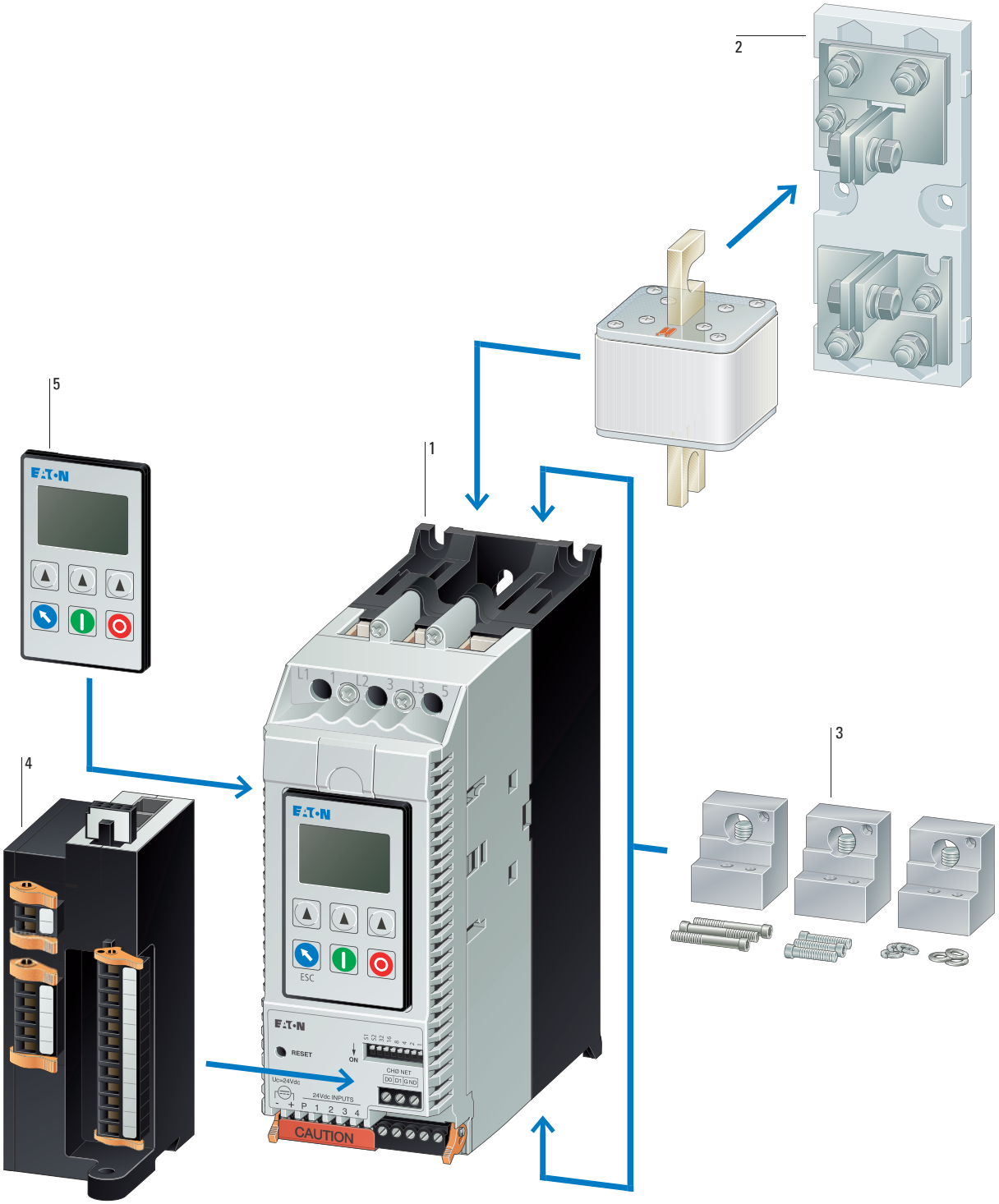

S811+ 1
→ Page 43

Superfast semiconductor fuses 2
→ Industrial Switchgear catalog

Terminal blocks 3
→ Page 44

EtherNet/IP – Modbus/TCP adapter 4
→ Page 44

External keypad 5
→ Page 44

Description



The soft starters are designed to guarantee reliable operation even under harsh and challenging ambient conditions. This series makes a compelling case as a result of its ease of use and is the perfect choice for standard applications such as pumps, fans, compressors, and conveyor belts.

S811+ soft starters have three-phase control and are equipped with internal bypass contacts for continuous operation. With their comprehensive protection and monitoring functions, S811+ soft starters ensure a soft startup, as well as safe and reliable continuous operation, for three-phase motors with rated operational currents of 37 A to 1000 A when working with mains voltages of 200 V to 690 V. For example, when used in pump applications, they prevent water impact by using controlled deceleration (soft stop control) and torque monitoring, significantly reducing the mechanical loads exerted on pump systems in the process.

S811+ essential characteristics

- Rated operational current: 37 - 1000 A
- Parameterizable overload settings: 31 - 100%
- Adjustable overload classes: class 5, 10, 20, 30
- Base setting: 15 s start ramp, 4 starts per hour, 300% starting current at 40°C ambient temperature
- Allocated motor outputs for in-line connection:
  – 7.5 - 250 kW (3~ 230 V)
  – 18.5 - 450 kW (3~ 400 V)
- Ambient air temperature: -30°C to +50°C
- any required mounting position
- Degree of protection with compact design (IP20 optional)
- 5 compact designs
- Adjustable torque control
- Adjustable kick start
- Efficient use of power achieved with internal bypass contacts during continuous operation
- 24 V control voltage:
  – External power required
  – 1 A continuous current
  – 10 A inrush current (peak value for 150 ms)

When using S811+ soft starters, motors can be connected either using a standard line (outside the delta) configuration or an inside-the-delta configuration. Using an inside-the-delta configuration will reduce the current flowing through the soft starter by approximately 42%. This way, a 58 A soft starter can be used to start and run a motor with a rated operational current of 100 A, for example.



Important operating unit characteristics (S811+)

- Language-neutral LCD display with backlight
- Easy to use and configure with function keys
- System parameter configuration
- Diagnostic and monitoring options
- Reading display (e.g., L1, L2, L3 phase currents)
- Error Display
- Offset placement (mounted on door), connection via plug-in patch cord with RJ11 plug
- Front IP54

S811+ specific characteristics

- Mains voltage up to 690 V
- Allocated motor outputs for in-line connection:
  – 7.5 - 250 kW (3~ 230 V)
  – 18.5 - 450 kW (3~ 400 V)
  – 160 - 710 kW (3~ 690 V)
- Special pump control algorithm with prolonged soft stop ramp
- Inside-the-delta configuration; please refer to “Engineering, connecting examples”
- RS485 Modbus Connection
- EtherNet-IP/Modbus-TCP with option C441 (communication adapter).

1.2 Soft starter S811+

Key to type references

Key to type references

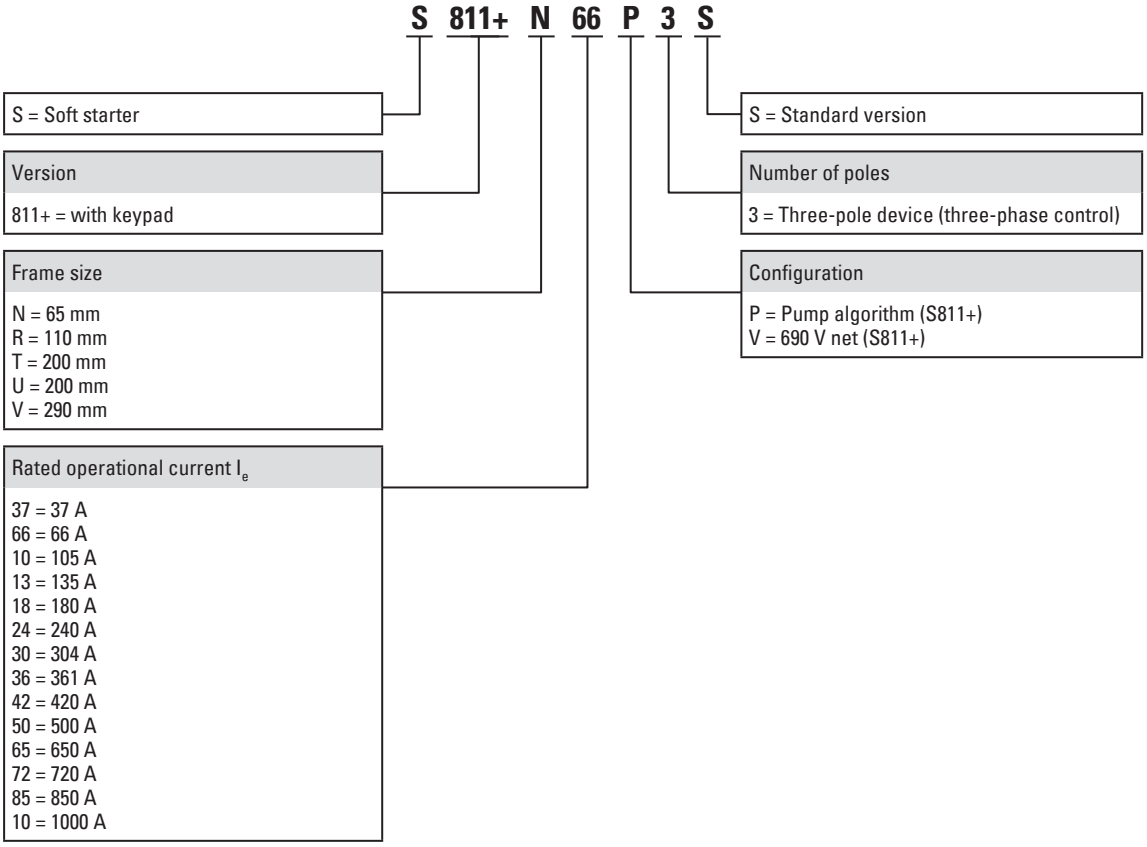

Ordering

Frame size	Rated operational current Device (AC-53) I_e A	Assigned motor output at 230 V, 50 Hz kW	at 230 V, 60 Hz HP	at 400 V, 50 Hz kW	at 460 V, 60 Hz HP	at 690 V, 50 Hz kW	Catalog Number-	Article no.	Std. pack
Soft Starters									
Supply voltage U_s: 24 V DC Control voltage U_c: 24 V DC With internal bypass contacts Terminal blocks for the terminals are required for frame sizes T, U, and V → Accessories									
Soft starter for three-phase loads, with control unit and pump algorithm Mains supply voltage (50/60 Hz) U_{LN}: 200 - 600 V AC In-line configuration/In-delta configuration									
N	37	7.5	10	18.5	25	–	**S811+N37P3S**	168977	1 unit
	66	18.5	20	30	50	–	**S811+N66P3S**	168979	
R	105	30	40	55	75	–	**S811+R10P3S**	168981	
	135	37	50	75	100	–	**S811+R13P3S**	168983	
T	180	55	60	90	150	–	**S811+T18P3S**	168985	
	240	75	75	132	200	–	**S811+T24P3S**	168988	
	304	90	100	160	250	–	**S811+T30P3S**	168991	
U	361	110	125	200	300	–	**S811+U36P3S**	169872	
	420	132	150	200	350	–	**S811+U42P3S**	169873	
V	361	110	125	200	300	–	**S811+V36P3S**	168994	
	420	132	150	200	350	–	**S811+V42P3S**	168997	
	500	160	200	250	400	–	**S811+V50P3S**	169000	
	650	200	250	315	500	–	**S811+V65P3S**	169003	
	720	250	–	400	600	–	**S811+V72P3S**	169006	
	850	–	–	450	600	–	**S811+V85P3S**	169009	
	1000	–	–	450	600	–	**S811+V10P3S**	169012	
Soft starter for three-phase loads, with control unit and pump algorithm, for 690 V grids Mains supply voltage (50/60 Hz) U_{LN}: 200 - 690 V AC In-line circuit									
T	180	55	60	90	150	160	**S811+T18V3S**	168986	1 unit
	304	90	100	160	250	250	**S811+T30V3S**	168992	
V	361	110	150	200	300	315	**S811+V36V3S**	168995	
	420	132	150	200	350	400	**S811+V42V3S**	168998	
	500	160	200	250	400	500	**S811+V50V3S**	169001	
	650	200	250	315	500	630	**S811+V65V3S**	169004	
	720	250	–	400	600	630	**S811+V72V3S**	169007	
	850	–	–	450	600	710	**S811+V85V3S**	169010	

S811+ frame sizes

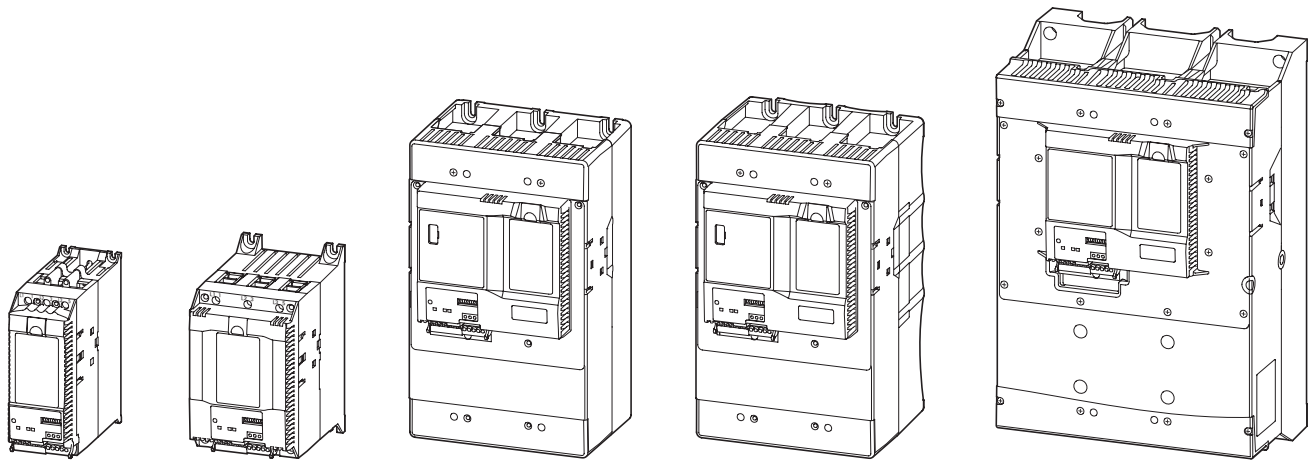

N R T U V

Description		For use with	Catalog Number Article no.	Std. pack
Keypad				
With illuminated LCD display with control buttons and function keys Front IP54 RJ11 plug, 6-pin		S811+	**EMA91** 144570	1 unit
Shroud				
Protection for installation space in S811+ if the control unit is set up externally.		S811+	**EMA68** 144556	1 unit
Mounting frame				
For mounting the EMA91 control unit externally with surface mounting (e.g., installation in control panel door).				
with connection cable RJ11, 6 pole	1 m	EMA91	**EMA69A** 144557	1 unit
	1.5 m	EMA91	**EMA69B** 144558	
	2 m	EMA91	**EMA69C** 144559	
	3 m	EMA91	**EMA69D** 144560	
Fieldbus modules				
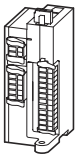 Ethernet-IP/Modbus-TCP		S811+	**C441V** 172306	1 unit
PROFIBUS-DP		S811+	**C441OS** 184746	1 unit
DeviceNet		S811+	**C441LS** 184747	1 unit
Control terminal strip				
Spare part		S811+	**EMA75** 144561	1 unit
Terminal blocks				
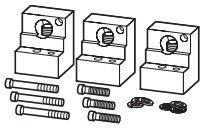 Tools with dimensions in inches required 1 set required for each connection side.				
Terminal capacities				
2 x 4-1/0MCM, 2 x 25 - 50 mm^2		S811+, frame sizes T and U	**EML22** 127661	1 unit
4/0-500 MCM, 120 - 240 mm^2 S801+, S811+, frame sizes T and U			**EML23** 127662	
2 x 4/0-500 MCM, 2 x 120 - 240 mm^2 S801+, S811+, frame sizes T and U			**EML24** 127663	
1 x 2/0-300 MCM, 1 x 70 - 150 mm^2 S801+, S811+, frame sizes T and U			**EML25** 127664	
2 x 2/0-300 MCM, 2 x 70 - 150 mm^2 S801+, S811+, frame sizes T and U			**EML26** 127665	
2 x 4/0-500 MCM, 2 x 120 - 240 mm^2 S801+, S811+, frame size V		S811+, frame size V	**EML28** 127666	
4 x 4/0-500 MCM, 4 x 120 - 240 mm^2 S801+, S811+, frame size V			**EML30** 127667	
6 x 4/0-500 MCM, 6 x 120 - 240 mm^2 S801+, S811+, frame size V			**EML32** 127668	
4 x 2/0-300 MCM, 4 x 70 - 150 mm^2 S801+, S811+, frame size V			**EML33** 127669	

Description	For use with	Catalog Number Article no.	Std. pack
Terminal cover			
For increasing the degree of protection to IP20 1 set required for each connection side.	S811+, frame size N	**SS-IP20-N** 171990	1 unit
	S811+, frame size R	**SS-IP20-R** 171991	
	S811+, frame sizes T and U	**SS-IP20-TU** 171992	
	S811+, frame size V	**SS-IP20-V** 158650	
Surge protection			
SMD metal-oxide varistors (MOVs) with connection cables for the grid and motor connection sides	S811+, up to 600 V	**EMS39** 127671	1 unit
	S811+, up to 690 V	**EMS41** 127672	
Power supplies PSG			
Rated output voltage 24 V DC (±2%) Rated output current: 10 A			
Nominal input voltage 100 - 240 V AC 125 - 250 V DC Single-phase		**PSG240E24RM** 172893	
Nominal input voltage 3 x 400 - 500 V AC Three-phase		**PSG240F24RM** 172884	

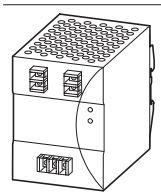

Engineering

Connection examples for S811+…N3S

Standard connection (in-line connection)

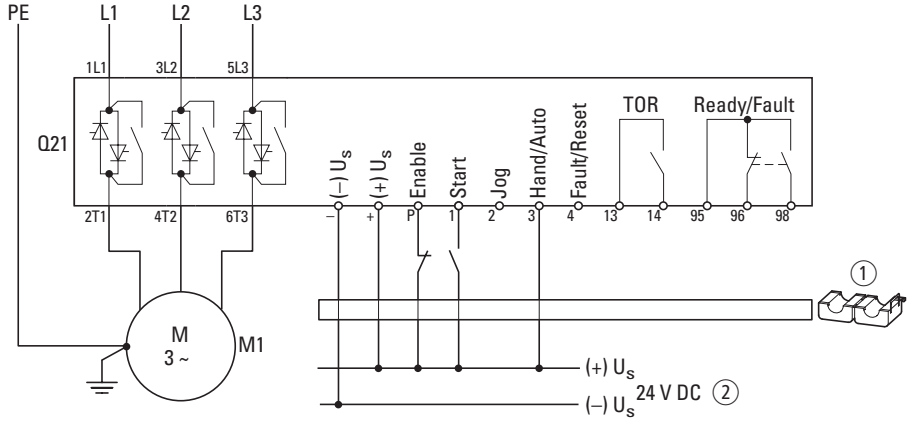

Delta circuit (inside-the-delta circuit)

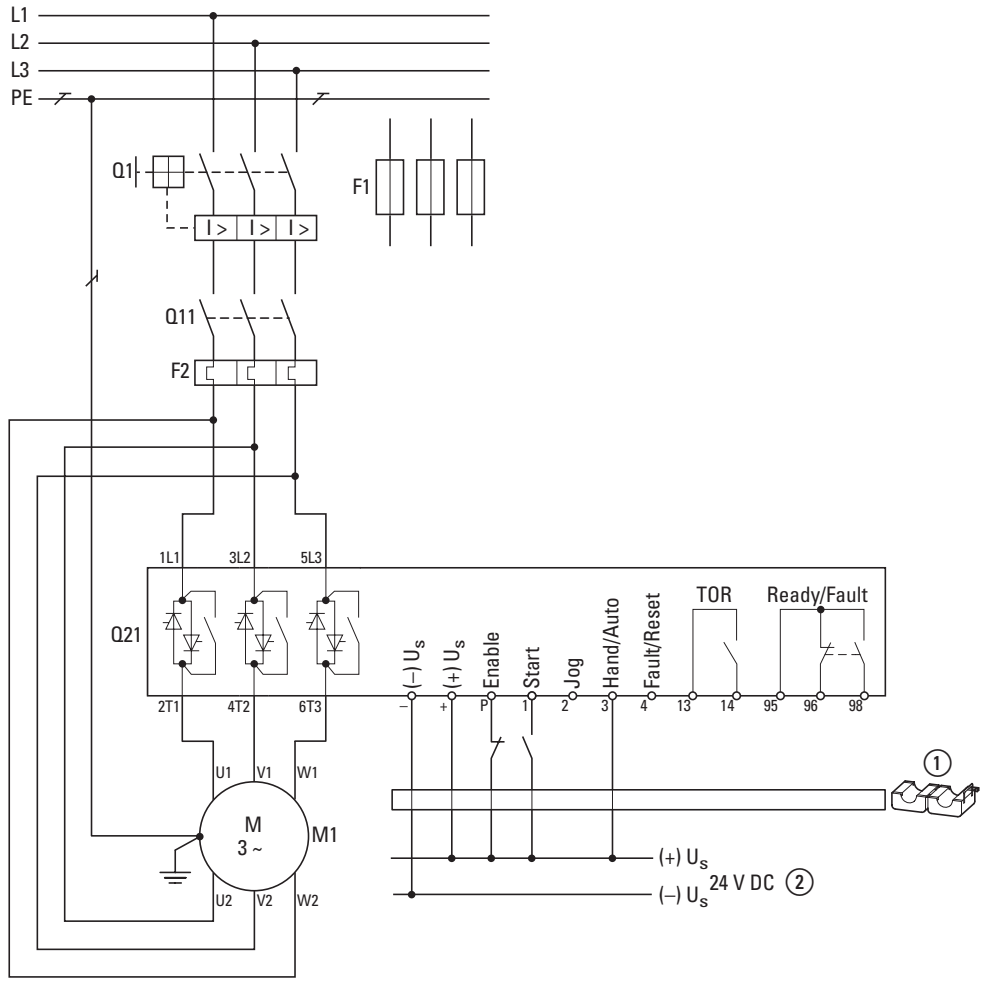

① Snap-on ferrite core, included as standard
② External control voltage (24 V DC) required, I_s 1 A, I_{Peak} = 10 A for 150 ms when bypass contacts are switched
Short-circuit and cable protection: Q1 circuit-breakers or F1 fuses.

Motor	IEC	NEMA
	U1-V1-W1	T1-T2-T3
	U2-V2-W2	T4-T5-T6

Technical specifications

Description	Specification
Temperature range	
Operation	-40° to 50°C
Storage	-50° to 70°C
Altitude above sea level	Up to 2000 m; derating of 0.5% for every 100 m above 2000 m
Humidity	Can be used up to 95%, non-condensing
Damp heat, constant, to IEC 60068-2-3	✓
Damp heat, cyclic, to IEC 60068-2-10	✓
Vibration resistance	
Operation	3 g in all directions
Not in operation	3 g in all directions
Protection type	
Protection type	IP20 (terminals IP00)
An IP20 degree of protection can be achieved on all sides by using optional terminal covers SS-IP20-N.	✓
Overvoltage category/pollution degree	II/3
Radio interference level (IEC/EN 55011)	A
Position for operation	Any
Pollution degree IEC 60947-1	3
Impact resistance	15 g in all directions

1.2 Soft starter S811+

Technical specifications

			Frame size
			N
General			
Actuating circuit			
Digital inputs			
Control voltage (DC operated)			24 V DC ±10%
Current consumption 24 V		mA	
External 24 V		mA	150
External 24 V (no load)		mA	100
Pick-up voltage, DC operated	x U_s	V DC	21.6 - 26.4
Drop-out voltage, DC operated	x U_s	V DC	maxim. 3 V DC
Pick-up time		ms	100
Falling time		ms	100
Regulator supply			
Voltage	U_s	V	24 V DC ±10%
Current consumption	I_e	mA	< 1000
Current consumption at peak performance (close bypass) at 24 V DC	I_{Peak}	A/ms	10/150
External supply voltage			✓
Analog inputs			
Number of 4 - 20 mA current inputs			1
Relay outputs			
Number of 120 V AC/DC ; 3 A, AC-11			2
Fully programmable			✓
Soft start function			
Ramp times			
Acceleration time		s	0.5 - 360
Deceleration time		s	0 - 120
Start voltage		%	
Max. start voltage		%	85
Kick-start			
Voltage			
Max kick-start voltage		%	85
Max. kick-start duration 50/60 Hz		ms	2000
Functions			
Fast switching (semiconductor contactor)			– (minimum ramp time 1 s)
Soft start function			✓
Suppression of closing transients			✓
Current limitation			✓
Overload detection			✓
Underload monitoring			✓
Fault log		Errors	10
Suppression of DC components on motors			✓
Potential isolation between power section and control section			✓
Modbus RTU communication interface			✓
Product range			
Internal bypass contacts			✓
Soft starter for three-phase loads, with control unit and pump algorithm			✓
200 - 600 V mains supply voltage (50/60 Hz)	U_{LN}	V AC	✓
200 - 690 V mains supply voltage (50/60 Hz)	U_{LN}	V AC	–
24 V supply voltage	U_s	V DC	✓
24 V control voltage	U_C	V DC	✓
Startup class			CLASS 10 (star-delta replacement) CLASS 20 (heavy starting duty, 3 x I_e for 45 s) CLASS 30 (6 x I_e for 30 s)
Terminal blocks for the terminals are required (accessories)			–

Frame size			
R	T	U	V
24 V DC ±10%	24 V DC ±10%	24 V DC ±10%	24 V DC ±10%
150	150	150	150
100	100	100	100
21.6 - 26.4	21.6 - 26.4	21.6 - 26.4	21.6 - 26.4
maxim. 3 V DC	maxim. 3 V DC	maxim. 3 V DC	maxim. 3 V DC
100	100	100	100
100	100	100	100
24 V DC ±10%	24 V DC ±10%	24 V DC ±10%	24 V DC ±10%
< 1000	< 1000	< 1000	< 1400
10/150	10/150	10/150	10/150
✓	✓	✓	✓
1	1	1	1
2	2	2	2
✓	✓	✓	✓
0.5 - 360	0.5 - 360	0.5 - 360	0.5 - 360
0 - 120	0 - 120	0 - 120	0 - 120
85	85	85	85
85	85	85	85
2000	2000	2000	2000
– (minimum ramp time 1 s)	– (minimum ramp time 1 s)	– (minimum ramp time 1 s)	– (minimum ramp time 1 s)
✓	✓	✓	✓
✓	✓	✓	✓
✓	✓	✓	✓
✓	✓	✓	✓
✓	✓	✓	✓
10	10	10	10
✓	✓	✓	✓
✓	✓	✓	✓
✓	✓	✓	✓
✓	✓	✓	✓
✓	✓	✓	✓
✓	✓	✓	✓
–	✓	–	✓
✓	✓	✓	✓
✓	✓	✓	✓
CLASS 10 (star-delta replacement) CLASS 20 (heavy starting duty, 3 x I_e for 45 s) CLASS 30 (6 x I_e for 30 s)	CLASS 10 (star-delta replacement) CLASS 20 (heavy starting duty, 3 x I_e for 45 s) CLASS 30 (6 x I_e for 30 s)	CLASS 10 (star-delta replacement) CLASS 20 (heavy starting duty, 3 x I_e for 45 s) CLASS 30 (6 x I_e for 30 s)	CLASS 10 (star-delta replacement) CLASS 20 (heavy starting duty, 3 x I_e for 45 s) CLASS 30 (6 x I_e for 30 s)
–	✓	✓	✓

Tested switchgear combinations for in-line and in-delta connections

Soft starter S811+ offers a flexibly adjustable internal motor protection function. Motor current and overload class can be set up to class 30, eliminating the need for an external overload relay. The measured current can be read out of the internal Modbus interface for further use in the process. The S811+ requires only the NZM circuit-breaker against short circuiting of the motor lines to achieve full motor output. The "In-Delta" connection is only possible with S811+, as it necessitates an extra mains contactor that is not required for "in-line" operation.

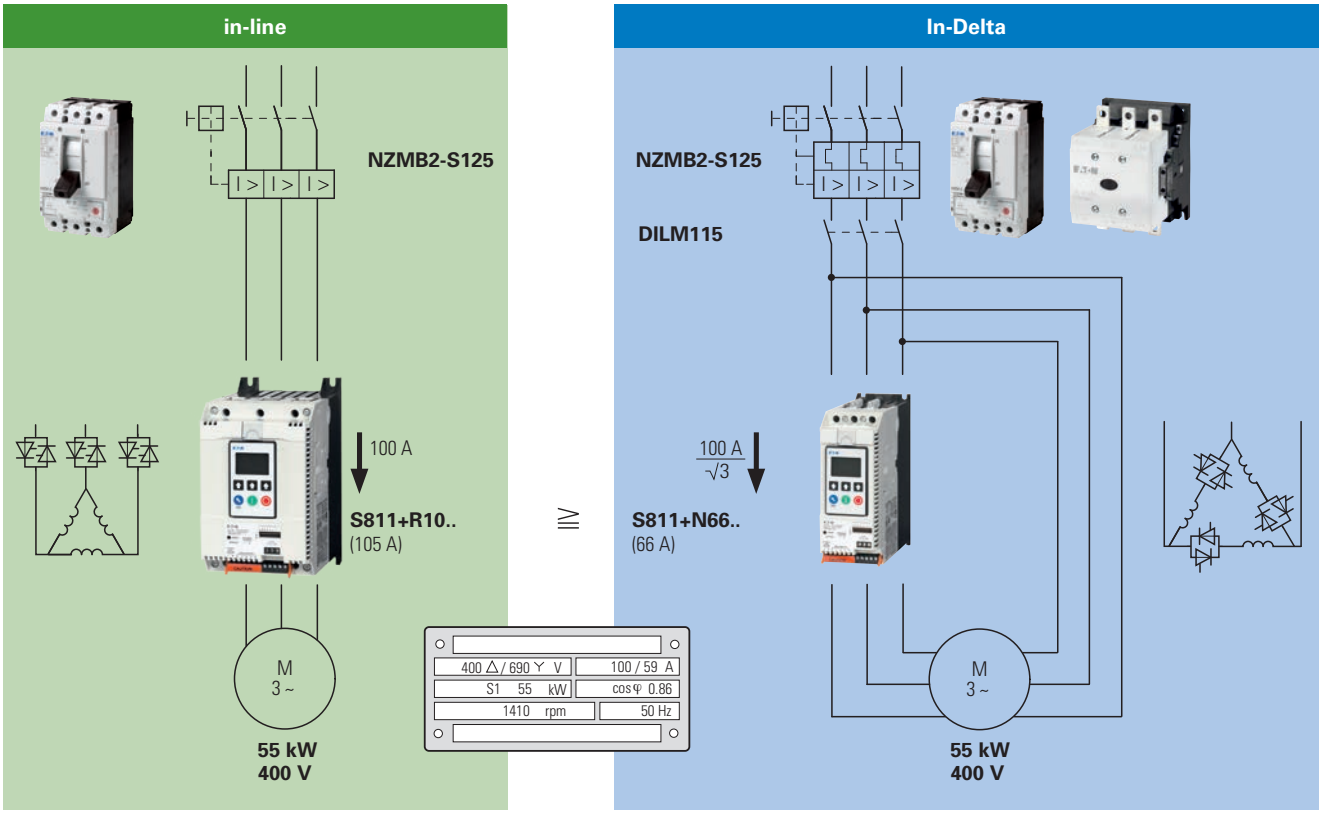

Rated operational current	assigned motor power at 400 V	assigned motor power at 480 V	Soft Starters	Soft Starters	Mains contactor	Cable protection
			in-line	In-Delta		
A	kW	HP	Type	Type	**Catalog Number**	**Catalog Number**
37	18.5	25	S811+N37P3S			PKM4-40
66	30	50	S811+N66P3S	S811+N37P3S	DILM72	NZMN1-S80
105	55	75	S811+R10P3S	S811+N66P3S	DILM115	NZMN2-S125
135	75	100	S811+R13P3S			NZMN2-S160
180	90	150	S811+T18P3S	S811+R10P3S	DILM185A	NZMN2-S200
240	132	200	S811+T24P3S	S811+R13P3S	DILM250	NZMN3-S250
304	160	250	S811+T30P3S	S811+T18P3S	DILM400	NZMN3-S320
360	200	250	S811+U36P3S	S811+T24P3S	DILM400	NZMN3-S400
360	200	250	S811+V36P3S			NZMN3-S400
420	200	350	S811+U42P3S			NZMN3-S500
420	200	350	S811+V42P3S			NZMN3-S500
500	250	400	S811+V50P3S	S811+T30P3S	DILM580	NZMN3-S500
650	315	500	S811+V65P3S	S811+U36P3S	DILM750	NZMN4-ME875
720	400	600	S811+V72P3S	S811+U42P3S	DILM750	NZMN4-ME875
850	450	600	S811+V85P3S	S811+V50P3S	DILM1000	NZMN4-ME875
1125	630	850		S811+V65P3S	DILM1600	NZMN4-ME1400
1246	630	850		S811+V72P3S	DILM1600	NZMN4-ME1400
1471	750	1100		S811+V85P3S	DILM1600	IZMX16…

(*) Switch only when stopped

Dimensions and weights

S811+N…

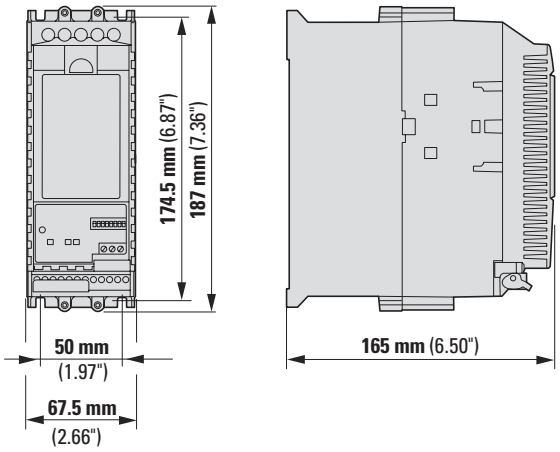

Catalog Number	Weight [kg]
S811+N37…	2.6
S811+N66…	

S811+R…

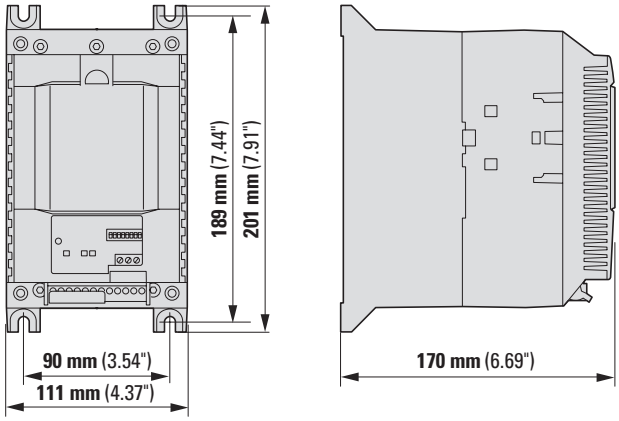

Catalog Number	Weight [kg]
S811+R10…	4.8
S811+R13…	

S811+T…

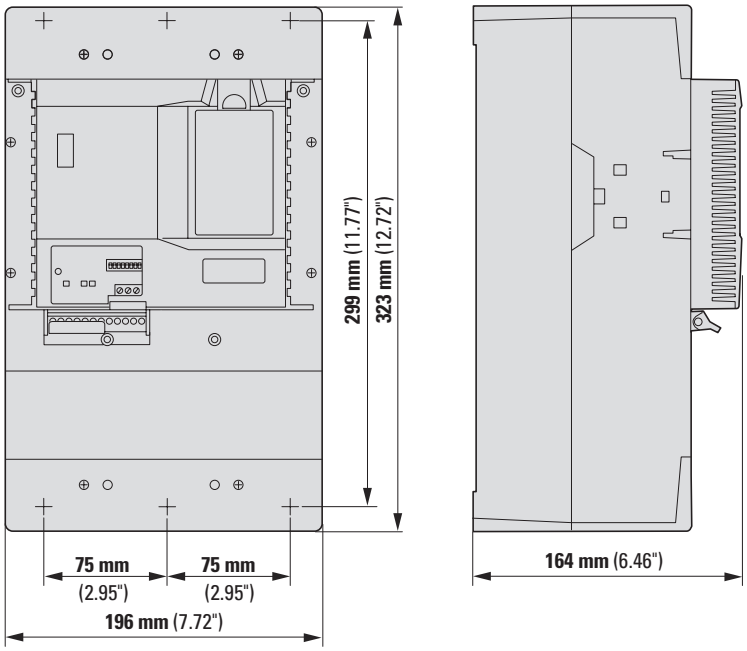

Catalog Number	Weight [kg]
S811+T18…	18.6
S811+T24…	
S811+T30…	

S811+U…

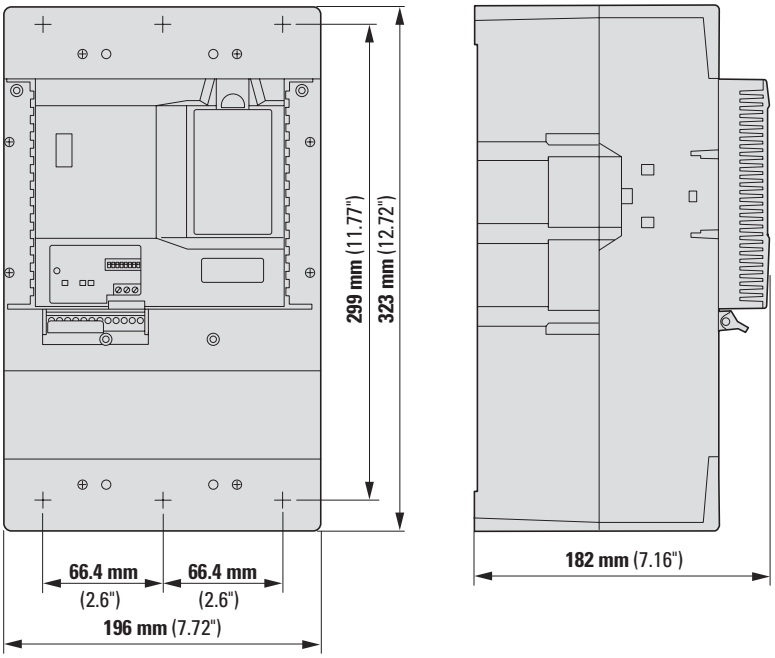

Catalog Number	Weight [kg]
S811+U36…	18.6
S811+U42…	
S811+U50…	

S811+V…

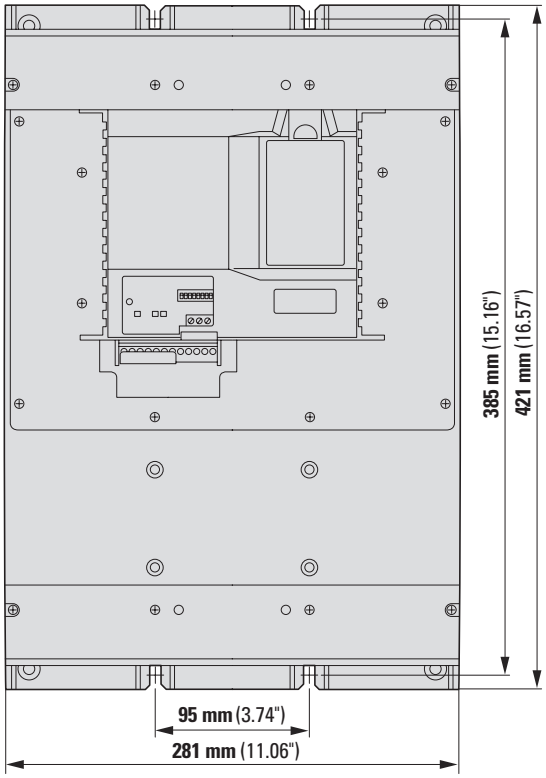

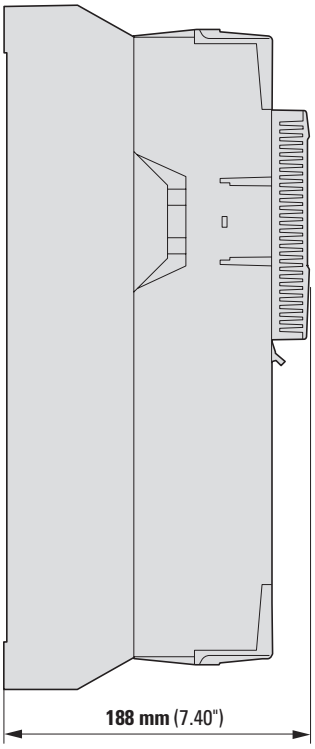

Catalog Number	Weight [kg]
S811+V36…	41.4
S811+V42…	
S811+V50…	
S811+V65…	
S811+V72…	
S811+V85…	
S811+V10…	



PowerXL DE1 variable speed starter

The PowerXL DE1 variable speed starter offers simple handling and highest reliability while at the same time variable motor speed and improved energy efficiency of the machine. This category of devices is the first to close the gap between conventional motor starters and variable frequency drives and combine all the advantages in a single unit.

Performance range:

- 0.25 - 2.2 kW (U_e: 1~ 230 V, U_2: 3~ 230 V)
- 0.37 - 7.5 kW (U_e: 3~ 400 V, U_2: 3~ 400 V)

Applications:

- Fans, pumps
- Simple Machines
- Retrofits in machines and systems in order to replace conventional motor starters or contactors for motor control

Features:

- Compact: 45 mm width
- Out-of-the-box commissioning without parameterization
- No special drives engineering skills or knowledge required
- Screwdriver parameterization can be set with DXE-EXT-SET optional configuration module
- Trip-free-design ensures maximum machine availability
- Suitable for use in ambient temperatures of up to 60 °C
- DE11 with on-board CANopen, removable control signal terminal strip, and programmable relay output
- International standards (CE, UL, cUL, cTick, RoHS)

Accessory:

- Plug-in configuration module
- Plug-in communication modules: SmartWire-DT, Ethernet/IP, PROFINET (PROFIdrive)
- External LED keypad
- Mains chokes
- Motor chokes
- External EMC filter
- Parameter storage unit and Bluetooth communication stick
- drivesConnect parameter configuration software
- drivesConnect mobile App (iOS, Android)

For more information, visit:
www.Eaton.com/DE1



2.1 DE1 variable speed starter up to 7.5 kW

System overview 56
Key to type references 57
Sizes and degree of protection 57
Ordering 58
DE1, for three-phase motors 230 V/400 V, IP20 58
DE11, for three-phase motors 230 V/400 V, IP20 59
Accessories 60
Engineering 61
Block diagram 61
Assigned switching and protective elements for DE1 62
Technical data 63
General rated operational data 63
Specific rated operational data 64
Dimensions and weights 70

System overview

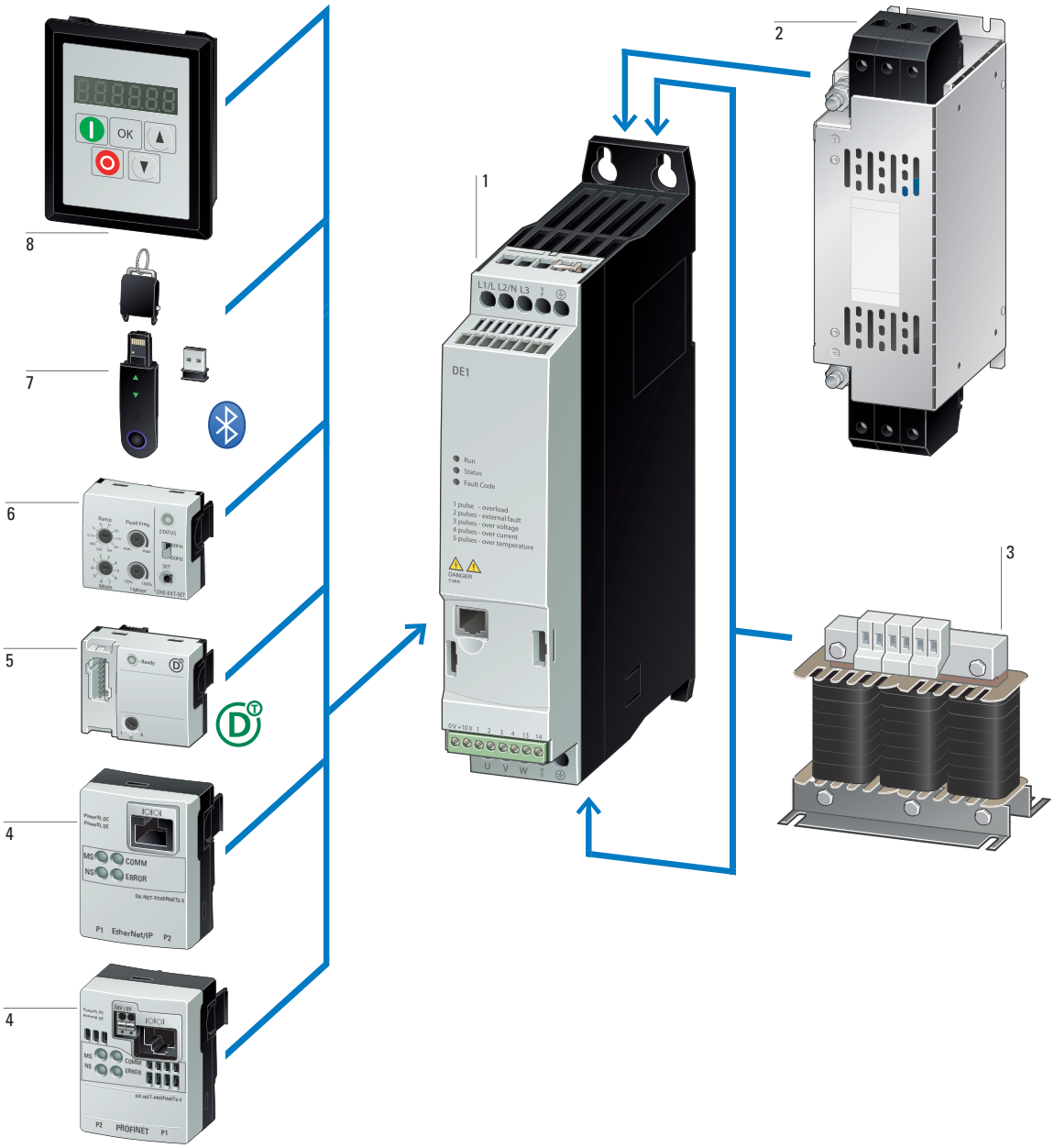

Variable speed starter DE1/DE11 → Page 58	1
Radio interference suppression filter → Page 217	2
Mains chokes, motor reactors → Page 215 → Page 219	3
Communication modules → **Page 60**	4
SmartWire-DT module → Page 60	5
Configuration module → Page 60	6
Memory and Bluetooth stick → Page 60	7
External keypad → Page 60	8

Key to type references

DE1 - 3 4 3D6 F N - N 20 N

Device series
DE1 = Variable speed starter (VSS), economy, series 1
DE11 = variable speed starter (VSS), economy, series 11
(D = Drives, E = Economy, 1/11 = Series)

Connection in power section
1 = single-phase mains connection/three-phase motor connection
3 = three-phase mains connection/three-phase motor connection

Mains voltage category
2 = 230 V (200 - 240 V ±10%)
4 = 400 V (380 - 480 V ±10%)

Rated operational current (examples)
1D4 = 1.4 A
9D6 = 9.6 A
016 = 16 A

Version
N = (Standard) basic device

Protection type
20 = IP20/NEMA 0

Display unit (display)
N = No display unit

Brake chopper
N = No internal brake chopper
B = Internal brake chopper

EMC (radio interference suppression filter)
N = no internal RFI filter
F = Internal RFI filter

Sizes and degree of protection

Frame size	Protection type
	IP20/NEMA 0
FS1	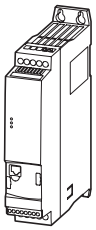
FS2	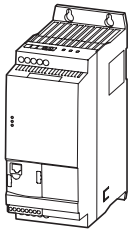

2.1 DE1 variable speed starter up to 7.5 kW

DE1, for three-phase motors 230 V/400 V, IP20

Ordering

Rated operational current [1) 2)]	Assigned motor output [2) 3) 4)]		Radio interference suppression filter	Frame size	Protection type	**Catalog Number** Article no.	Std. pack
I_e	P	P					
A	kW	HP					
PowerXL DE1 variable speed starter							
U_e 230 V AC, single-phase / U_2 230 V AC, three-phase Mains voltage (50/60Hz) U_{LN} 200 (-10%) - 240 (+10%) V							
1.4	0.25	0.33	–	FS1	IP20/NEMA 0	**DE1-121D4NN-N20N** 177359	1 unit
			✓			**DE1-121D4FN-N20N** 174327	
2.3	0.37	0.5	–			**DE1-122D3NN-N20N** 177360	
			✓			**DE1-122D3FN-N20N** 174328	
2.7	0.55		–			**DE1-122D7NN-N20N** 177361	
			✓			**DE1-122D7FN-N20N** 174329	
4.3	0.75	1	–			**DE1-124D3NN-N20N** 177362	
			✓			**DE1-124D3FN-N20N** 174330	
7	1.5	2	–			**DE1-127D0NN-N20N** 177363	
			✓			**DE1-127D0FN-N20N** 174331	
9.6	2.2	3	–	FS2		**DE1-129D6NN-N20N** 177364	
			✓			**DE1-129D6FN-N20N** 174332	
U_e 400 V AC, three-phase / U_2 400 V AC, three-phase Mains voltage (50/60Hz) U_{LN} 380 (-10%) - 480 (+10%) V							
1.3	0.37	0.5	–	FS1	IP20/NEMA 0	**DE1-341D3NN-N20N** 177365	1 unit
			✓			**DE1-341D3FN-N20N** 174333	
2.1	0.75	1	–			**DE1-342D1NN-N20N** 177366	
			✓			**DE1-342D1FN-N20N** 174334	
3.6	1.5	2	–			**DE1-343D6NN-N20N** 177367	
			✓			**DE1-343D6FN-N20N** 174335	
5	2.2	3	–	FS2		**DE1-345D0NN-N20N** 177368	
			✓			**DE1-345D0FN-N20N** 174336	
6.6	3		–			**DE1-346D6NN-N20N** 177369	
			✓			**DE1-346D6FN-N20N** 174337	
8.5	4	5	–			**DE1-348D5NN-N20N** 177370	
			✓			**DE1-348D5FN-N20N** 174338	
11.3	5.5	7.5	–			**DE1-34011NN-N20N** 177371	
			✓			**DE1-34011FN-N20N** 174339	
16	7.5	10	–			**DE1-34016NN-N20N** 177372	
			✓			**DE1-34016FN-N20N** 174340	

Notes

[1)] Rated operational current at a switching frequency of 16 kHz and an ambient air temperature of +50°C
[2)] Overload cycle: 150% for 60 s every 600 s
[3)] DE1-12…: at 230 V, 50 Hz/at 220 - 240 V, 60 Hz
DE1-34…: at 400 V, 50 Hz/at 440 - 480 V, 60 Hz
[4)] For normal internally and externally ventilated four-pole three-phase asynchronous motors with 1500 rpm at 50 Hz and 1800 rpm at 60 Hz

Rated operational current [1) 2)]	Assigned motor output [2) 3) 4)]		Radio interference suppression filter	Frame size	Protection type	**Catalog Number** Article no.	Std. pack
I_e	P	P					
A	kW	HP					
PowerXL DE11 variable speed starter							
U_e 230 V AC, single-phase / U_2 230 V AC, three-phase Mains voltage (50/60Hz) U_{LN} 200 (-10%) - 240 (+10%) V							
1.4	0.25	0.33	–	FS1	IP20/NEMA 0	**DE11-121D4NN-N20N** 180656	1 unit
			✓			**DE11-121D4FN-N20N** 180650	
2.3	0.37	0.5	–			**DE11-122D3NN-N20N** 180657	
			✓			**DE11-122D3FN-N20N** 180651	
2.7	0.55		–			**DE11-122D7NN-N20N** 180658	
			✓			**DE11-122D7FN-N20N** 180652	
4.3	0.75	1	–			**DE11-124D3NN-N20N** 180659	
			✓			**DE11-124D3FN-N20N** 180653	
7	1.5	2	–			**DE11-127D0NN-N20N** 180660	
			✓			**DE11-127D0FN-N20N** 180654	
9.6	2.2	3	–	FS2		**DE11-129D6NN-N20N** 180661	
			✓			**DE11-129D6FN-N20N** 180655	
U_e 400 V AC, three-phase / U_2 400 V AC, three-phase Mains voltage (50/60Hz) U_{LN} 380 (-10%) - 480 (+10%) V							
1.3	0.37	0.5	–	FS1	IP20/NEMA 0	**DE11-341D3NN-N20N** 180670	1 unit
			✓			**DE11-341D3NN-N20N** 180670	
2.1	0.75	1	–			**DE11-342D1NN-N20N** 180671	
			✓			**DE11-342D1FN-N20N** 180663	
3.6	1.5	2	–			**DE11-343D6NN-N20N** 180672	
			✓			**DE11-343D6FN-N20N** 180664	
5	2.2	3	–	FS2		**DE11-345D0NN-N20N** 180673	
			✓			**DE11-345D0FN-N20N** 180665	
6.6	3		–			**DE11-346D6NN-N20N** 180674	
			✓			**DE11-346D6FN-N20N** 180666	
8.5	4	5	–			**DE11-348D5NN-N20N** 180675	
			✓			**DE11-348D5FN-N20N** 180667	
11.3	5.5	7.5	–			**DE11-34011NN-N20N** 180676	
			✓			**DE11-34011FN-N20N** 180668	
16	7.5	10	–			**DE11-34016NN-N20N** 180677	
			✓			**DE11-34016FN-N20N** 180669	

Notes

1) Rated operational current at a switching frequency of 16 kHz and an ambient air temperature of +50°C
2) Overload cycle: 150% for 60 s every 600 s
3) DE11-12…: at 230 V, 50 Hz/at 220 - 240 V, 60 Hz
DE11-34…: at 400 V, 50 Hz/at 440 - 480 V, 60 Hz
4) For normal internally and externally ventilated four-pole three-phase asynchronous motors with 1500 rpm at 50 Hz and 1800 rpm at 60 Hz

	Description	Length m	For use with	Catalog Number Article no.	Std. pack
	**External keypad**				
	With 7-digital display assembly Front IP54 With approx. 3 m-long, plug-in connection cable (RJ45, 8-pin)	3	DE1, DE11, DC1, DB1, DA1, RAMO5, RASP5	**DX-KEY-LED2** 186946	1 unit
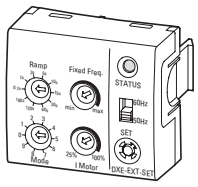	**Configuration module**				
	Plug-in module (front) with selector switch for ramp time and operating mode With potentiometer for motor protection and fixed frequency	–	DE1, DE11	**DXE-EXT-SET** 174621	1 unit
	Communication modules				
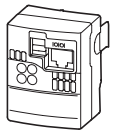	Profinet				
	Profinet plug-in module (front) with 2 x RJ45, 8 pole, PROFIdrive profile		DE1, DE11, DC1 (IP20)	**DX-NET-PROFINET2-2** 184947	1 unit
	Ethernet/IP				
	Ethernet/IP plug-in module (front) with 2 x RJ45, 8 pole	–	DE1, DE11, DC1 (IP20)	**DX-NET-ETHERNET2-2** 184969	1 unit
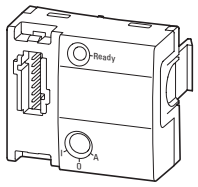	**SmartWire-DT module**				
	Plug-in module (front) with slot for SWD4-8SF2-5 external device plug	–	DE1, DE11, DC1 (IP20)	**DX-NET-SWD3** 169131	1 unit
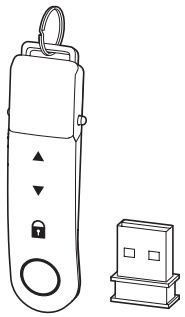	**Parameter assignment**				
	Parameter storage unit and Bluetooth communication stick				
	For storage, copying parameters, and/or transferring parameters to a PC or smartphone (iOS or Android) via Bluetooth with the drivesConnect software or the drivesConnect mobile app respectively With 2 function keys for uploading and downloading parameters with parameter memory.	–	DE1, DE11, DC1, DB1, DA1, RAMO5, RASP5	**DX-COM-STICK3-KIT** 197586	1 unit
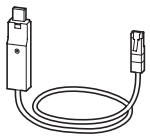	**Programming cable**				
	Interface converter USB/RS485 with connection cable, RJ45 8 pole For storage, copying parameters, and/or transferring parameters to a PC with the drivesConnect software, electrically isolated	3	DE1, DE11, DC1, DB1, DA1, RAMO5, RASP5	**DX-CBL-PC-3M0** 744-A3036-00P	1 unit
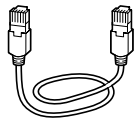	**Connection cable**				
	Patch cord with RJ45 plugs, 8 pole	0.5	DE1, DE11, DC1, DB1, DA1	**DX-CBL-RJ45-0M5** 169137	1 unit
		1		**DX-CBL-RJ45-1M0** 169138	
		3		**DX-CBL-RJ45-3M0** 169139	
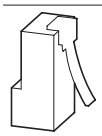	**Bus terminating resistor**				
	RJ45 8 pole Connection to CANopen® (pin 1/2, 124 Ω) or to Modbus RTU (pin 7/8, 120 Ω)	–	DX-SPL-RJ45-2SL-1PL	**EASY-NT-R** 256281	2 unit
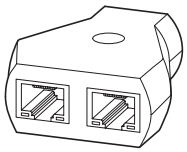	**Splitter**				
	RJ45, 8-pin, 3 sockets	–	DX-CBL-RJ45…	**DX-SPL-RJ45-3SL** 169141	1 unit
	RJ45, 8-pin, 2 sockets/1 plug	–	DE1, DE11, DC1, DB1, DA1	**DX-SPL-RJ45-2SL1PL** 169142	

Engineering

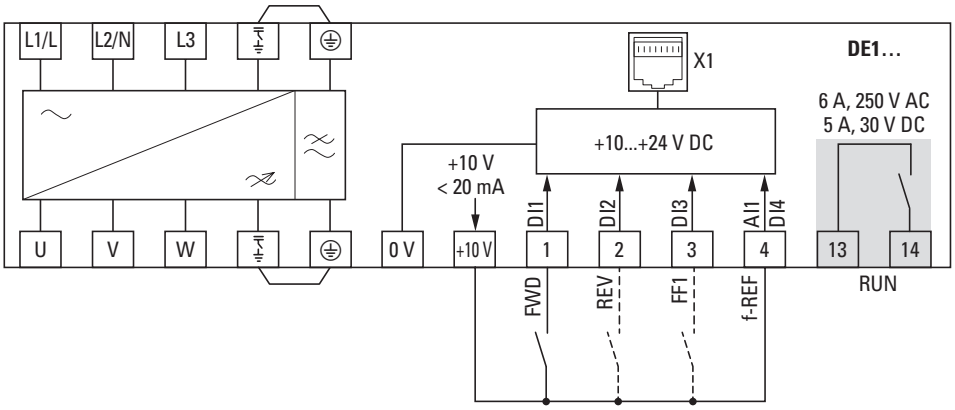

Mains
1 ~ 200 V - 240 V ±10 %, 50/60 Hz (DE1...-12...)

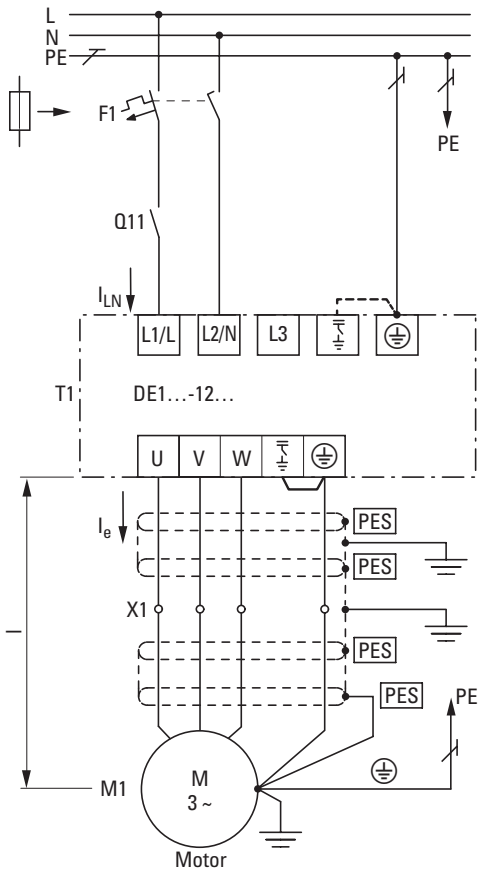

Mains
3 ~ 380 V - 480 V ±10 %, 50/60 Hz (DE1...-34...)

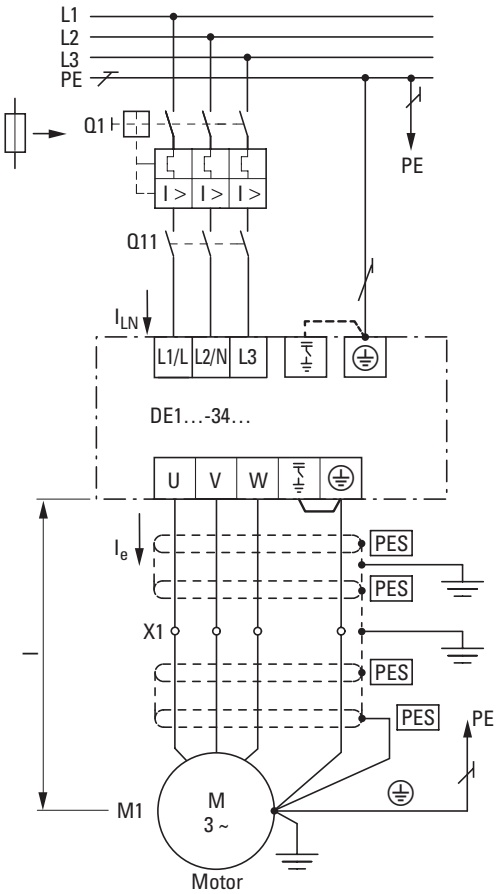

2.1 DE1 variable speed starter up to 7.5 kW

Assigned switching and protective elements for DE1

Catalog Number	Motor	Variable frequency drives		Mains connection				Mains connection	Motor feeder
	Assigned motor output [1) 2)]	Rated operational current [1)]	Input current	Protection device (fuse or miniature circuit-breaker)		Mains contactor	Mains choke	Radio interference suppression filter (external, 150 %) [3)]	Motor choke
	I_H = 150%	I_H = 150%	I_H = 150%	IEC (Type B, gG), 150%	UL (Class CC or J)	I_H = 150% (CT/IH, at 50°C)	I_H = 150% (at 50°C)		I_H = 150% (CT/I_H, at 50°C)
	P	I_e	ILN						
	kW	A	A		A				
230 V AC, single-phase/230 V AC, three-phase									
DE1-121D4…	0.25	1.4	3.6	FAZ-B10/1N	10	DILEM-… + P1DILEM	DX-LN1-006	DX-EMC12-019-FS1	DX-LM3-008
DE1-122D3…	0.37	2.3	6.2	FAZ-B10/1N	10	DILEM-… + P1DILEM	DX-LN1-009	DX-EMC12-019-FS1	DX-LM3-008
DE1-122D7…	0.55	2.7	7.3	FAZ-B10/1N	10	DILEM-… + P1DILEM	DX-LN1-009	DX-EMC12-019-FS1	DX-LM3-008
DE1-124D3…	0.75	4.3	11.3	FAZ-B16/1N	15	DILEM-… + P1DILEM	DX-LN1-013	DX-EMC12-019-FS1	DX-LM3-008
DE1-127D0…	1.5	7	17.4	FAZ-B20/1N	20	DILEM-… + P1DILEM	DX-LN1-018	DX-EMC12-019-FS1	DX-LM3-008
DE1-129D6…	2.2	9.6	23.2	FAZ-B32/1N	35	DILEM-… + P1DILEM	DX-LN1-024	DX-EMC12-025-FS2	DX-LM3-011
400 V AC, three-phase/400 V AC, three-phase									
DE1-341D3…	0.37	1.3	1.7	FAZ-B6/3	6	DILEM-…	DX-LN3-004	DX-EMC34-008	DX-LM3-008
DE1-342D1…	0.75	2.1	3.1	FAZ-B6/3	6	DILEM-…	DX-LN3-004	DX-EMC34-008	DX-LM3-008
DE1-343D6…	1.5	3.6	4.9	FAZ-B6/3	6	DILEM-…	DX-LN3-006	DX-EMC34-008	DX-LM3-008
DE1-345D0…	2.2	5	7	FAZ-B16/3	15	DILEM-…	DX-LN3-010	DX-EMC34-008	DX-LM3-008
DE1-346D6…	3	6.6	8.5	FAZ-B16/3	15	DILEM-…	DX-LN3-010	DX-EMC34-016	DX-LM3-008
DE1-348D5…	4	8.5	10	FAZ-B16/3	15	DILEM-…	DX-LN3-010	DX-EMC34-016	DX-LM3-011
DE1-34011…	5.5	11.3	12	FAZ-B16/3	15	DILEM-…	DX-LN3-016	DX-EMC34-016	DX-LM3-011
DE1-34016…	7.5	16	16.5	FAZ-B25/3	25	DILEM-…	DX-LN3-024	DX-EMC34-030	DX-LM3-016

Notes

[1)] Overload cycle for 60 s every 600 s

[2)] For normal internally and externally ventilated four-pole three-phase asynchronous motors with 1500 rpm at 50 Hz and 1800 rpm at 60 Hz

[3)] Optional external radio interference suppression filter for longer motor cable lengths and for use in different EMC environments

Technical specifications

	Symbol	Unit	value
General			
Standards			Specification for general requirements: IEC/EN 61800-2 EMC requirements: IEC/EN 61800-3 Safety requirements: IEC/EN 61800-5-1
Certifications and manufacturer's declarations on conformity			CE, UL, cUL, RCM
Production quality			RoHS, ISO 9001
Climatic proofing	ρw	%	< 95%, average relative humidity (RH), non-condensing, non-corrosive, no dripping water (IEC/EN 61800-5-1)
Ambient temperature			
Operation			
IP20 (NEMA 0)	ϑ	°C	-10 - +60 Exception: The following device types use derating: DE1…-34016NN-N20N, DE1…-34016FN-N20N.
Storage	ϑ	°C	-40 - +70
Impact resistance (EN 60068-2-27)			15 g/11 ms (under operating conditions) Mounted on DIN-rail Mounted on mounting plate with screws
Vibration as per IEC/EN 61800-5-1			Transportation as per IEC/EN 61800-2 DE1... transported as a single device in a separate package and UPS drop test (15 g/11 ms)
MTBF (mean time between failures)			DE1…-12… (FS1): > 73 years DE1…-12… (FS2): > 17 years DE1…-34… (FS1): > 88 years DE1…-34… (FS2): > 73 years
Electrostatic discharge (ESD, IEC 61800-3)	U	kV	±4, contact discharge / ±6, air discharge
Fast transient Burst (IEC 61800-3)			5 kHz for 5 min. / 100 kHz for 5 min.
Radio interference class (EN 61800-3)			
Maximum (screened) motor cable length with integrated radio interference suppression filter			
C1 (DE1…-12… only, for conducted emissions only)	l	m	5
C2	l	m	10
C3	l	m	25
Interference immunity (EN 61800-3)			1st and 2nd environments
Maximum motor cable length			
not screened	l	m	125
screened	l	m	65
Mounting position			Any, not suspended (front not facing downwards), vertical only with DE1…-121D4…, DE1…-122D3…, DE1…-122D7…
Altitude	h	m	0 - 1000 above sea level, > 1000 with 1% load current reduction (derating) for every 100 m, Max. 2000
Protection type			IP20 (NEMA 0)
Protection against contact			BGV A3 (VBG4, finger- and back-of-hand proof)

2.1 DE1 variable speed starter up to 7.5 kW

Specific rated operational data

	Symbol	Unit	DE1…-121D4…	DE1…-122D3…	DE1…-122D7…	DE1…-124D3…	DE1…-127D0…	DE1…-129D6…
DE1…-12… (single-phase mains connection)								
Mains connection								
Rated operating voltage	U_e	V	230, single-phase	230, single-phase	230, single-phase	230, single-phase	230, single-phase	230, single-phase
Mains voltage	U_{LN}	V	200 - 240 ±10% (180 - 264)	200 - 240 ±10% (180 - 264)	200 - 240 ±10% (180 - 264)	200 - 240 ±10% (180 - 264)	200 - 240 ±10% (180 - 264)	200 - 240 ±10% (180 - 264)
Mains frequency	f	Hz	50/60 ±10%	50/60 ±10%	50/60 ±10%	50/60 ±10%	50/60 ±10%	50/60 ±10%
Input current (without mains choke)	I_{LN}	A	3.6	6.2	7.3	11.3	17.4	23.2
Power Part								
Rated operational current	I_e	A	1.4	2.3	2.7	4.3	7	9.6
Overload current, 1.5 x I_e, cyclically for 60 s every 600 s	$I_{2\text{-}150}$	A	2.1	3.45	4.05	6.45	10.5	14.4
Overload current, max. 2 x I_e every 600 s	I_{2max}	A	2.8	4.6	5.4	8.6	14	19.2
Output voltage at U_e	U_2	V	230, 3-phase	230, 3-phase	230, 3-phase	230, 3-phase	230, 3-phase	230, 3-phase
Output frequency	f_2	Hz	0 - 50/60 (max. 300)	0 - 50/60 (max. 300)	0 - 50/60 (max. 300)	0 - 50/60 (max. 300)	0 - 50/60 (max. 300)	0 - 50/60 (max. 300)
Frequency resolution (setpoint value)	Δf	%	0.025	0.025	0.025	0.025	0.025	0.025
Pulse frequency (audible)	f_{PWM}	kHz	16 (4/8/12/16/24/32)	16 (4/8/12/16/24/32)	16 (4/8/12/16/24/32)	16 (4/8/12/16/24/32)	16 (4/8/12/16/24/32)	16 (4/8/12/16/24/32)
Derating between 50°C and 60°C			none	none	none	none	none	none
Contact current[1)]	I_{PE}	mA	< 3.5 AC/ < 10 DC	< 3.5 AC/ < 10 DC	< 3.5 AC/ < 10 DC	< 3.5 AC/ < 10 DC	< 3.5 AC/ < 10 DC	< 3.5 AC/ < 10 DC
DC-braking			0 - 100% U_e, 0 - 10 s, parameterizable					
Heat dissipation (idle, standby)	PV	W	3.44	3.44	3.44	3.44	3.44	4.66
Heat dissipation (speed/torque)								
100/100	P_V	W	16.4	18.3	25	30.9	78.4	91
90/100	P_V	W	16.4	18.3	25	30.9	78.4	91
90/50	P_V	W	12.6	10.4	15.1	15.3	51.6	55
50/100	P_V	W	13.5	16.8	19.8	28.9	68.9	72
50/50	P_V	W	11.6	7.9	12.3	14.7	44.9	46
50/25	P_V	W	10.9	5.6	10	10.3	37	38
0/100	P_V	W	13	–	25.3	31.8	62.4	–
0/50	P_V	W	10.5	10	10.9	15.2	44.6	–
0/25	P_V	W	–	–	–	–	–	30

Notes [1)] Due to the design used for single-phase DE1…-12… devices, a higher leakage current will be produced if L1 and N are swapped.

	Symbol	Unit	DE1…-121D4…	DE1…-122D3…	DE1…-122D7…	DE1…-124D3…	DE1…-127D0…	DE1…-129D6…
DE1…-12… (single-phase mains connection)								
Motor feeder								
Motor power, assigned								
at 230 V, 50 Hz	P	kW	0.25	0.37	0.55	0.75	1.5	2.2
at 220 -240 V, 60 Hz	P	HP	1/3	1/2	1/2	1	2	3
Apparent power at rated value								
at 230 V	S	kVA	0.56	0.92	1.08	1.71	2.79	3.82
at 240 V	S	kVA	0.58	0.96	1.12	1.79	2.91	3.99
Control section								
Relay								
Switching contact			S (RUN signal)					
Voltage, maximum	U	V	250 AC/30 DC	250 AC/30 DC	250 AC/30 DC	250 AC/30 DC	250 AC/30 DC	250 AC/30 DC
Load current, maximum	I	A	6 AC-1/5 DC-1	6 AC-1/5 DC-1	6 AC-1/5 DC-1	6 AC-1/5 DC-1	6 AC-1/5 DC-1	6 AC-1/5 DC-1
Reference voltage/Control voltage								
Output voltage	U_c	V	10	10	10	10	10	10
Max. permissible load current	I_c	mA	20	20	20	20	20	20
Analog input								
Resolution			12 bits	12 bits	12 bits	12 bits	12 bits	12 bits
Voltage	U_s	V	0 - 10	0 - 10	0 - 10	0 - 10	0 - 10	0 - 10
Current	I_s	mA	0/4 - 20	0/4 - 20	0/4 - 20	0/4 - 20	0/4 - 20	0/4 - 20
Digital input								
High signal voltage level	U_c	V	9 - 30	9 - 30	9 - 30	9 - 30	9 - 30	9 - 30
Input current	I_s	mA	1.15 (10 V)/ 3 (24 V)	1.15 (10 V)/ 3 (24 V)	1.15 (10 V)/ 3 (24 V)	1.15 (10 V)/ 3 (24 V)	1.15 (10 V)/ 3 (24 V)	1.15 (10 V)/ 3 (24 V)
Enclosure material								
Frame size			FS1	FS1	FS1	FS1	FS1	FS2
Dimensions (W x H x D)		mm	45 x 230 x 169	45 x 230 x 169	45 x 230 x 169	45 x 230 x 169	45 x 230 x 169	90 x 230 x 169
Maximum permissible deviation from vertical installation position		Degrees	5	5	5	90	90	90
Internal device fan			no	no	no	Yes	Yes	Yes
Protection type			IP20/NEMA 0	IP20/NEMA 0	IP20/NEMA 0	IP20/NEMA 0	IP20/NEMA 0	IP20/NEMA 0
Weight	m	kg	1.04	1.04	1.06	1.06	1.06	1.68
Terminal capacities, clampable								
Power Part								
Solid or stranded	A	mm^2	1 - 6	1 - 6	1 - 6	1 - 6	1 - 6	1 - 6
Flexible with ferrule	A	mm^2	1 - 6	1 - 6	1 - 6	1 - 6	1 - 6	1 - 6
Solid or stranded	A	AWG	18 - 6	18 - 6	18 - 6	18 - 6	18 - 6	18 - 6
Strip length	l	mm	8	8	8	8	8	8
Tool			PZ2 (Pozidrive) cross screwdriver					
Tightening torque	M	Nm	1.2	1.2	1.2	1.2	1.2	1.2
Control section								
Solid or stranded	A	mm^2	0.05 - 1.5	0.05 - 1.5	0.05 - 1.5	0.05 - 1.5	0.05 - 1.5	0.05 - 1.5
Flexible with ferrule	A	mm^2	0.5 - 1	0.5 - 1	0.5 - 1	0.5 - 1	0.5 - 1	0.5 - 1
Solid or stranded	A	AWG	30 - 16	30 - 16	30 - 16	30 - 16	30 - 16	30 - 16
Strip length	l	mm	5	5	5	5	5	5
Tool			0.7 x 3 mm standard screwdriver					
Tightening torque	M	Nm	0.5	0.5	0.5	0.5	0.5	0.5

2.1 DE1 variable speed starter up to 7.5 kW

Specific rated operational data

	Symbol	Unit	DE1…-341D3…	DE1…-342D1…	DE1…-343D6…	DE1…-345D0…
DE1…-34… (three-phase mains connection)						
Mains connection						
Rated operating voltage	U_e	V	380/400/480, 3-phase	380/400/480, 3-phase	380/400/480, 3-phase	380/400/480, 3-phase
Mains voltage	U_{LN}	V	380 - 480 ±10% (342 - 528)	380 - 480 ±10% (342 - 528)	380 - 480 ±10% (342 - 528)	380 - 480 ±10% (342 - 528)
Mains frequency	f	Hz	50/60 ±10%	50/60 ±10%	50/60 ±10%	50/60 ±10%
Input current (without mains choke)	I_{LN}	A	1.7	3.1	4.9	7
Power Part						
Rated operational current	I_e	A	1.3	2.1	3.6	5
Overload current, 1.5 x I_e, cyclically for 60 s every 600 s	$I_{2\text{-}150}$	A	1.95	3.15	5.4	7.5
Overload current, max. 2 x I_e every 600 s	I_{2max}	A	2.6	4.2	7.2	10
Output voltage at U_e	U_2	V	380/400/480, 3-phase	380/400/480, 3-phase	380/400/480, 3-phase	380/400/480, 3-phase
Output Frequency	f_2	Hz	0 - 50/60 (max. 300)	0 - 50/60 (max. 300)	0 - 50/60 (max. 300)	0 - 50/60 (max. 300)
Frequency resolution (reference value)	Δf	%	0.025	0.025	0.025	0.025
Pulse frequency (audible)	f_{PWM}	kHz	16 (10/12/14/16/18/20)	16 (10/12/14/16/18/20)	16 (10/12/14/16/18/20)	16 (10/12/14/16/18/20)
Derating between 50°C and 60°C			none	• None if $f_{PWM} \leqq 16$ kHz • None if $f_{PWM} \leqq 20$ kHz, up to a max. of 57°C • None if $I_e \leqq 1.6$ A	• None if $f_{PWM} \leqq 16$ kHz • None if $I_e \leqq 3.2$ A • None up to a max. of 57°C	none
Contact current	I_{PE}	mA	< 3.5 AC / < 10 DC	< 3.5 AC / < 10 DC	< 3.5 AC / < 10 DC	< 3.5 AC / < 10 DC
DC-braking			0 - 100% U_e, 0 - 10 s, parameterizable			
Heat dissipation (idle, standby)	P_V	W	5.13	5.13	5.13	5.52
Heat dissipation (speed/torque)						
100/100	P_V	W	16.7	26.8	44.9	57
90/100	P_V	W	16.7	26.8	44.9	57
90/50	P_V	W	14.2	16.7	30.4	39
50/100	P_V	W	20.7	27.9	44.7	50
50/50	P_V	W	11.4	17.2	28.4	37
50/25	P_V	W	9.9	14.3	24.9	30
0/100	P_V	W	–	–	41.6	–
0/50	P_V	W	–	–	22.3	36
0/25	P_V	W	–	–	–	29
Motor feeder						
Motor power, assigned						
at 400 V, 50 Hz	P	kW	0.37	0.75	1.5	2.2
at 440 - 480 V, 60 Hz	P	HP	1/2	1	2	3
Apparent power at rated value						
at 400 V	S	kVA	0.90	1.45	2.49	3.46
at 480 V	S	kVA	1.08	1.75	2.99	4.16
Control section						
Relay						
Switching contact			S (RUN signal)			
Voltage, maximum	U	V	250 AC/30 DC	250 AC/30 DC	250 AC/30 DC	250 AC/30 DC
Load current, maximum	I	A	6 AC-1/5 DC-1	6 AC-1/5 DC-1	6 AC-1/5 DC-1	6 AC-1/5 DC-1
Reference voltage/Control voltage						
Output voltage	U_c	V	10	10	10	10
Maximum permissible load current	I_c	mA	20	20	20	20
Analog input						
Resolution			12 bits	12 bits	12 bits	12 bits
Voltage	U_s	V	0 - 10	0 - 10	0 - 10	0 - 10
Current	I_s	mA	0/4 - 20	0/4 - 20	0/4 - 20	0/4 - 20
Digital Input						
High signal voltage level	U_c	V	9 - 30	9 - 30	9 - 30	9 - 30
Input current	I_c	mA	1.15 (10 V)/ 3 (24 V)	1.15 (10 V)/ 3 (24 V)	1.15 (10 V)/ 3 (24 V)	1.15 (10 V)/ 3 (24 V)

	Symbol	Unit	DE1…-341D3…	DE1…-342D1…	DE1…-343D6…	DE1…-345D0…
DE1…-34… (three-phase mains connection)						
Enclosure material						
Frame size			FS1	FS1	FS1	FS2
Dimensions (W x H x D)		mm	45 x 230 x 169	45 x 230 x 169	45 x 230 x169	90 x 230 x 169
Maximum permissible deviation from vertical installation position		Degrees	90	90	90	90
Internal device fan			Yes	Yes	Yes	Yes
Protection type			IP20/NEMA 0	IP20/NEMA 0	IP20/NEMA 0	IP20/NEMA 0
Weight	m	kg	1	1	1	1.6
Terminal capacities, clampable						
Power Part						
Solid or stranded	A	mm^2	1 - 6	1 - 6	1 - 6	1 - 6
Flexible with ferrule	A	mm^2	1 - 6	1 - 6	1 - 6	1 - 6
Solid or stranded	A	AWG	18 - 6	18 - 6	18 - 6	18 - 6
Strip length	l	mm	8	8	8	8
Tool			PZ2 (Pozidrive) cross screwdriver			
Tightening Torque		Nm	1.2	1.2	1.2	1.2
Control section						
Solid or stranded	A	mm^2	0.05 - 1.5	0.05 - 1.5	0.05 - 1.5	0.05 - 1.5
Flexible with ferrule	A	mm^2	0.5 - 1	0.5 - 1	0.5 - 1	0.5 - 1
Solid or stranded	A	AWG	30 - 16	30 - 16	30 - 16	30 - 16
Strip length	l	mm	5	5	5	5
Tool			0.7 x 3 mm standard screwdriver			
Tightening Torque	M	Nm	0.5	0.5	0.5	0.5

2.1 DE1 variable speed starter up to 7.5 kW

Specific rated operational data

	Symbol	Unit	DE1…-346D6…	DE1…-348D5…	DE1…-34011…	DE1…-34016…
DE1…-34… (three-phase mains connection)						
Mains connection						
Rated operating voltage	U_e	V	380/400/480, 3-phase	380/400/480, 3-phase	380/400/480, 3-phase	380/400/480, 3-phase
Mains voltage	U_{LN}	V	380 - 480 ±10% (342 - 528)			
Mains frequency	f	Hz	50/60 ±10%	50/60 ±10%	50/60 ±10%	50/60 ±10%
Input current (without mains choke)	I_{LN}	A	8.5	10	12	16.5
Power Part						
Rated Current	I_e	A	6.6	8.5	11	16
Overload current, 1.5 x I_e, cyclically for 60 s every 600 s	I_{2-150}	A	9.9	12.75	16.5	24
Overload current, max. 2 x I_e every 600 s	I_{2max}	A	13.2	17	22	32
Output voltage at U_e	U_2	V	380/480, 3-phase	380/480, 3-phase	380/480, 3-phase	380/480, 3-phase
Output Frequency	f_2	Hz	0 - 50/60 (max. 300)	0 - 50/60 (max. 300)	0 - 50/60 (max. 300)	0 - 50/60 (max. 300)
Frequency resolution (setpoint value)	Δf	%	0.025	0.025	0.025	0.025
Pulse frequency (audible)	f_{PWM}	kHz	16 (10/12/14/16/18/20)	16 (10/12/14/16/18/20)	16 (10/12/14/16/18/20)	16 (10/12/14/16/18/20)
Derating between 50°C and 60°C			none	none	• None if $f_{PWM} \leqq 16$ kHz • None if $I_e \leqq 10.6$ A and $f_{PWM} \leqq 20$ kHz • None up to a max. of 57°C	• None if $f_{PWM} \leqq 14$ kHz up to a max. of 50°C • None if $f_{PWM} \leqq 16$ kHz up to a max. of 46°C • None if $I_e \leqq 14.9$ A and $f_{PWM} \leqq 10$ kHz • None if $I_e \leqq 10.6$ A and $f_{PWM} \leqq 20$ kHz
Contact current	I_{PE}	mA	< 3.5 AC/< 10 DC	< 3.5 AC/< 10 DC	< 3.5 AC/< 10 DC	< 3.5 AC/< 10 DC
DC-braking			0 - 100% U_e, 0 - 10 s, parameterizable			
Heat dissipation (idle, standby) Pv		W	5.52	5.52	5.52	5.52
Heat dissipation (speed/torque)						
100/100	P_v	W	76	101	132	216
90/100	P_v	W	76	101	132	216
90/50	P_v	W	55	65	88	126
50/100	P_v	W	69	93	121	198
50/50	P_v	W	51	60	85	121
50/25	P_v	W	48	51	64	86
0/100	P_v	W	–	76	–	–
0/50	P_v	W	–	55	72	–
0/25	P_v	W	–	47	58	78
Motor feeder						
Motor power assigned						
at 400 V, 50 Hz	P	kW	3	4	5.5	7.5
at 440 - 480 V, 60 Hz	P	HP	3	5	7.5	10
Apparent power at rated value						
at 400 V	S	kVA	4.57	5.89	7.62	11.09
at 480 V	S	kVA	5.49	7.07	9.15	13.30
Control section						
Relay						
Switching contact			S (RUN signal)			
Voltage, maximum	U	V	250 AC/30 DC	250 AC/30 DC	250 AC/30 DC	250 AC/30 DC
Load current, maximum	I	A	6 AC-1/5 DC-1	6 AC-1/5 DC-1	6 AC-1/5 DC-1	6 AC-1/5 DC-1
Reference voltage/Control voltage						
Output voltage	U_c	V	10	10	10	10
Maximum permissible load current	I_c	mA	20	20	20	20
Analog input						
Resolution			12 bits	12 bits	12 bits	12 bits
Voltage	U_s	V	0 - 10	0 - 10	0 - 10	0 - 10
Current	I_s	mA	0/4 - 20	0/4 - 20	0/4 - 20	0/4 - 20
Digital Input						
High signal voltage level	U_c	V	9 - 30	9 - 30	9 - 30	9 - 30
Input current	I_c	mA	1.15 (10 V)/3 (24 V)	1.15 (10 V)/3 (24 V)	1.15 (10 V)/3 (24 V)	1.15 (10 V)/3 (24 V)

	Symbol	Unit	DE1…-346D6…	DE1…-348D5…	DE1…-34011…	DE1…-34016…
DE1…-34… (three-phase mains connection)						
Enclosure material						
Frame size			FS2	FS2	FS2	FS2
Dimensions (W x H x D)		mm	90 x 230 x 169	90 x 230 x 169	90 x 230 x 169	90 x 230 x 169
Maximum permissible deviation from vertical installation position		Degrees	90	90	90	90
Internal device fan			Yes	Yes	Yes	Yes
Protection type			IP20/NEMA 0	IP20/NEMA 0	IP20/NEMA 0	IP20/NEMA 0
Weight	m	kg	1.6	1.6	1.6	1.6
Terminal capacities, clampable						
Power Part						
Solid or stranded	A	mm^2	1 - 6	1 - 6	1 - 6	1 - 6
Flexible with ferrule	A	mm^2	1 - 6	1 - 6	1 - 6	1 - 6
Solid or stranded	A	AWG	18 - 6	18 - 6	18 - 6	18 - 6
Strip length	l	mm	8	8	8	8
Tool			PZ2 (Pozidrive) cross screwdriver			
Tightening Torque		Nm	1.2	1.2	1.2	1.2
Control section						
Solid or stranded	A	mm^2	0.05 - 1.5	0.05 - 1.5	0.05 - 1.5	0.05 - 1.5
Flexible with ferrule	A	mm^2	0.5 - 1	0.5 - 1	0.5 - 1	0.5 - 1
Solid or stranded	A	AWG	30 - 16	30 - 16	30 - 16	30 - 16
Strip length	l	mm	5	5	5	5
Tool			0.7 x 3 mm standard screwdriver			
Tightening Torque	M	Nm	0.5	0.5	0.5	0.5

Dimensions and weights

Frame sizes FS1 and FS2

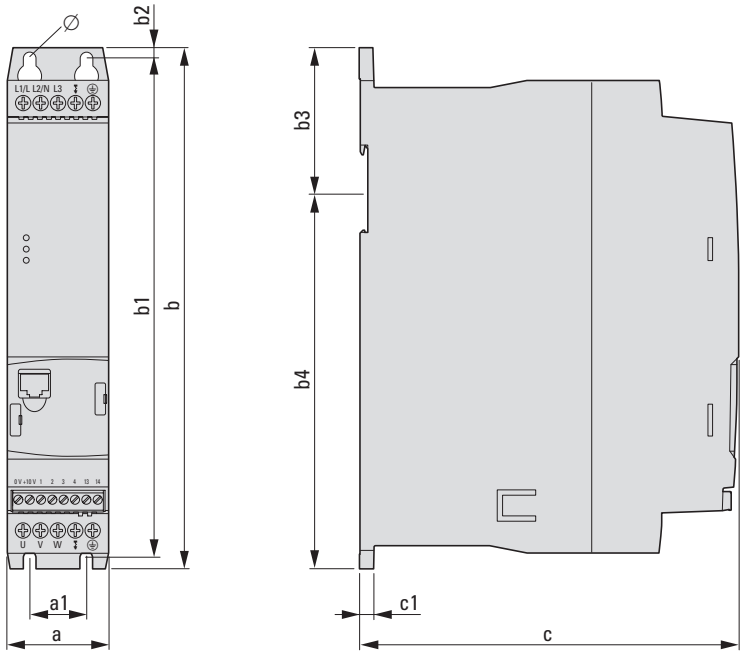

Frame size	a	a1	b	b1	b2	b3	b4	c	c1	Ø 1	Ø 2	m
	mm	mm	mm	mm	mm	mm	mm	mm	mm	mm	mm	kg
FS1	45	25	230	220	5	64	166	168	6.5	5.1	10	1.04
FS2	90	50	230	220	5	64	166	168	6.5	5.1	10	1.68



PowerXL variable frequency drives DC1 Compact Machinery Drive

The compact PowerXL DC1 variable frequency drive is particularly well-suited for use with simple pump, fan, and conveyor belt systems. It can be quickly and easily configured and commissioned, resulting in tangible savings.

Performance range:

- 0.37 - 0.55 kW (U_e: 1~ 115 V, U_2: 1~ 115 V)
- 0.37 - 1.1 kW (U_e: 1~ 115 V, U_2: 3~ 230 V)
- 0.37 - 1.1 kW (U_e: 1~ 230 V, U_2: 1~ 230 V)
- 0.37 - 4 kW (U_e: 1~ 230 V, U_2: 3~ 230 V)
- 0.37 - 11 kW (U_e: 3~ 230 V, U_2: 3~ 230 V)
- 0.75 - 22 kW (U_e: 3~ 400 V, U_2: 3~ 400 V)

Applications:

- Fans, pumps
- Machines
- Coating systems
- Conveyor belts
- Filling machines
- Distributed applications (IP66)
- 1~ AC motors

For more information, visit:
www.Eaton.com/DC1

Features:

- Fast commissioning with 14 basic parameters
- Large overload capability: 150% for 60 seconds, 175% for 2 seconds
- Ambient air temperature up to 50°C without derating
- Sensorless vector control
- Can be used to drive high-efficiency IE4 motors
- Short-circuit proof in all operating modes
- Integrated CANopen and Modbus RTU
- Degrees of protection IP20 and IP66
- Integrated EMC filter
- Integrated Brake Transistor
- Integrated PI controller
- U/f control
- Voltage boost
- DC braking
- Detachable control signal terminal strip
- International standards (CE, UL, cUL, RCM, RoHS, EAC, UkrSEPRO)

Accessory:

- Plug-in communication modules: SmartWire-DT, Ethernet/IP, PROFINET (PROFIdrive)
- External LED keypad
- Mains chokes
- Motor chokes
- External EMC filter
- I/O expansions
- External keypad
- Sine filter
- Braking resistances
- Parameter storage unit and Bluetooth communication stick
- drivesConnect parameter configuration software
- drivesConnect mobile App (iOS, Android)



2.2 PowerXL variable frequency drives DC1

System overview 74
Key to type references 75
Sizes and degree of protection 76
Ordering 77
DC1, for AC motors 115 V/230 V, IP20 77
DC1, for three-phase motors 230 V, IP20 78
DC1, for three-phase motors 400 V, IP20 80
DC1, for AC motors 115 V/230 V, IP66 81
DC1, for three-phase motors 230 V, IP66 82
DC1, for three-phase motors 400 V, IP66 84
Accessories 85
Engineering 87
Connection examples 87
Switching and protective devices rated for DC1 92
Technical data 94
General rated operational data 94
Specific rated operational data 97
Dimensions and weights 103

System overview

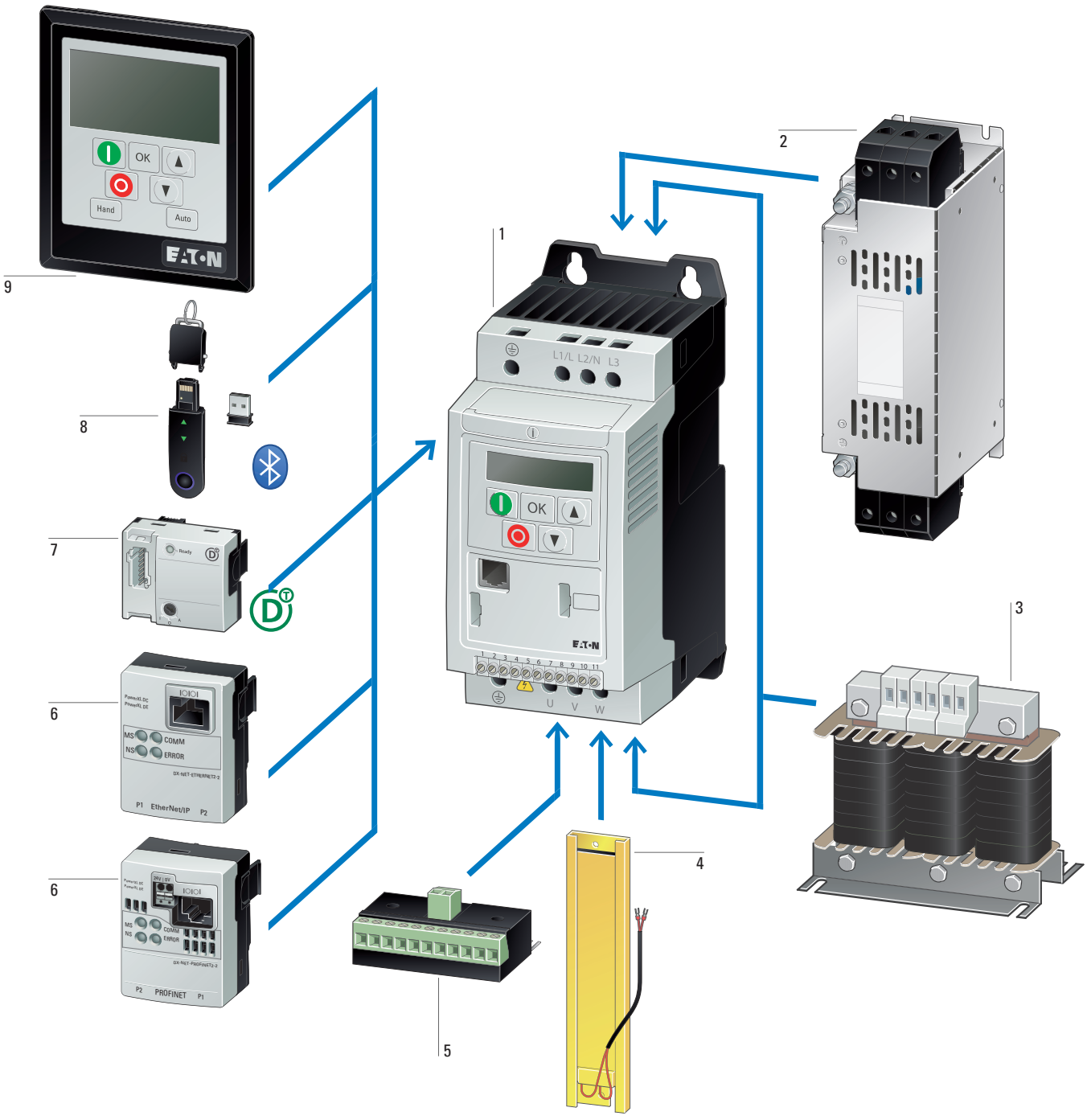

DC1 variable frequency drive 1
→ Page 77

External radio interference suppression filter 2
→ Page 229

Mains choke, motor choke, sine filter 3
→ Page 215
→ Page 219
→ Page 220

Braking resistance 4
→ Page 222

Expansion modules 5
→ Page 85

Communication modules 6
→ Page 85

SmartWire-DT module 7
→ Page 85

Memory and Bluetooth stick 8
→ Page 85

External keypad 9
→ Page 85

Key to type references

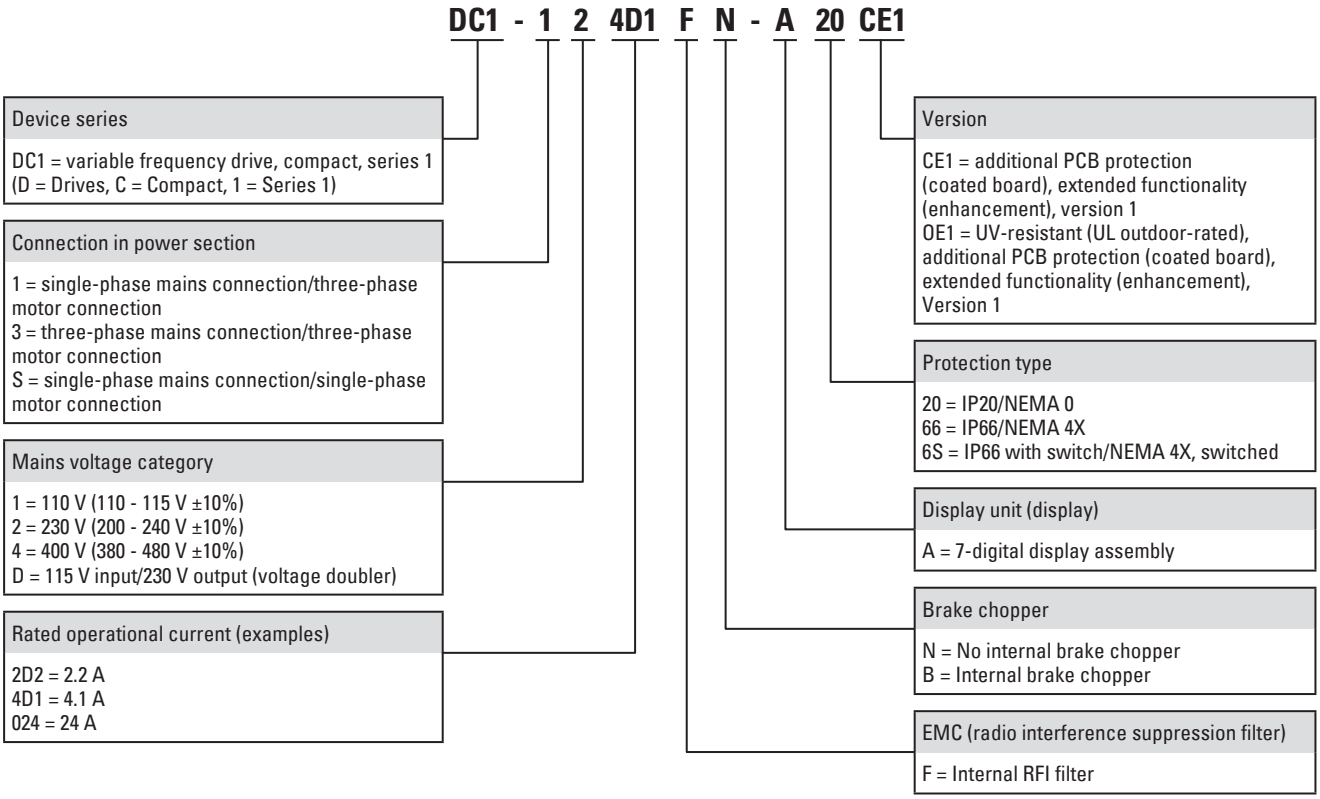

Sizes and degree of protection

Frame size	Protection type		
	IP20/NEMA 0	IP66/NEMA 4X	IP66/NEMA 4X Local controls
FS1	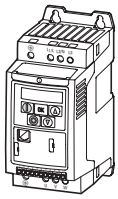	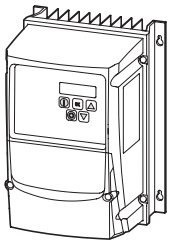	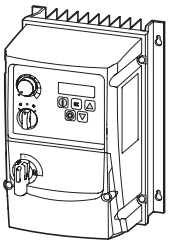
FS2	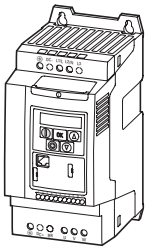	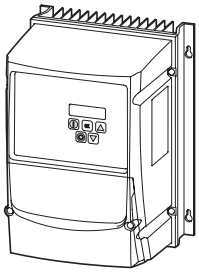	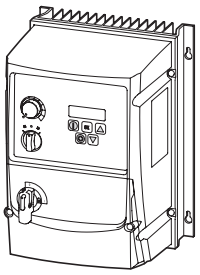
FS3	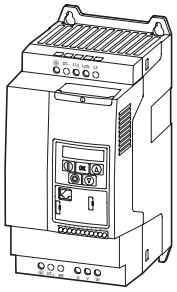	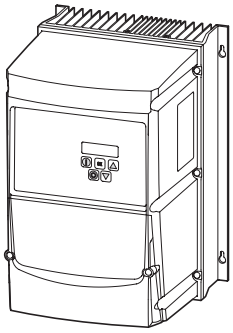	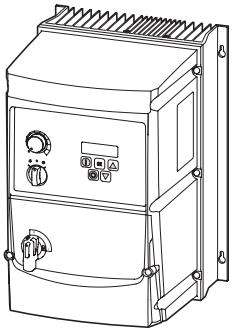
FS4	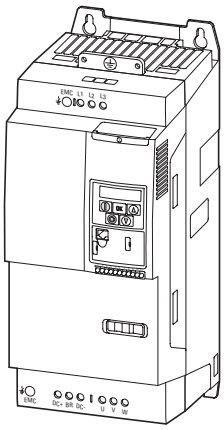	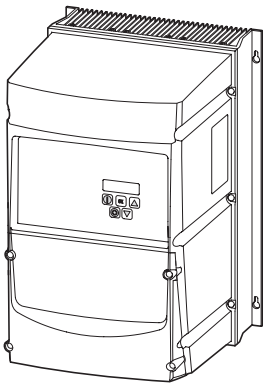	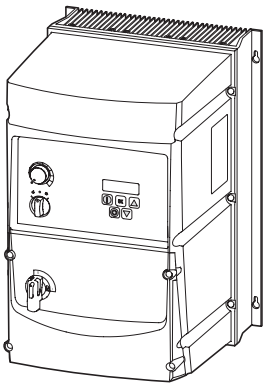

Ordering

Rated operational current [1) 4)]	Assigned motor output [1) 2) 3)]		Configuration			Frame size	Protection type	**Catalog Number** Article no.	Std. pack
			Radio interference suppression filter	Brake chopper	7-segment display				
I_e A	P kW	P HP							
PowerXL variable frequency drives DC1									
U_e 115 V AC, single-phase / U_2 115 V AC, single-phase Mains voltage (50/60Hz) U_{LN} 110 (-10%) - 115 (+10%) V									
7	0.37	0.5	–	–	✓	FS1	IP20/NEMA 0	**DC1-S17D0NN-A20CE1** 186073	1 unit
10.5	0.55	0.75	–	✓	✓	FS2		**DC1-S1011NB-A20CE1** 186076	
U_e 230 V AC, single-phase / U_2 230 V AC, single-phase Mains voltage (50/60Hz) U_{LN} 200 (-10%) - 240 (+10%) V									
4.3	0.37	0.5	–	–	✓	FS1	IP20/NEMA 0	**DC1-S24D3NN-A20CE1** 186079	1 unit
			✓	–	✓			**DC1-S24D3FN-A20CE1** 186088	
7	0.75	1	–	–	✓			**DC1-S27D0NN-A20CE1** 186082	
			✓	–	✓			**DC1-S27D0FN-A20CE1** 186091	
10.5	1.1	1.5	–	✓	✓	FS2		**DC1-S2011NB-A20CE1** 186085	
			✓	✓	✓			**DC1-S2011FB-A20CE1** 186094	

Notes

1) Overload cycle: 150% for 60 s every 600 s
2) DC1-S1…: at 115 V, 50 Hz/at 110 - 120 V, 60 Hz
DC1-S2…: at 230 V, 50 Hz/at 220 - 240 V, 60 Hz
3) For AC motors with internal and external ventilation with 50/60 Hz without additional start capacitor
4) Rated operational current at a switching frequency of 16 kHz and an ambient air temperature of +50°C

2.2 PowerXL variable frequency drives DC1

DC1, for three-phase motors 230 V, IP20

Rated operational current [1) 4)]	Assigned motor output [1) 2) 3)]		Configuration			Frame size	Protection type	**Catalog Number** Article no.	Std. pack
			Radio interference suppression filter	Brake chopper	7-segment display				
I_e A	P kW	P HP							
PowerXL variable frequency drives DC1									
The mains voltage of 115 V is raised to 230 V (output voltage) through an internal voltage double connection. U_e 115 V AC, single-phase / U_2 230 V AC, three-phase Mains voltage (50/60Hz) U_{LN} 110 (-10%) - 115 (+10%) V									
2.3	0.37	0.5	–	–	✓	FS1	IP20/NEMA 0	**DC1-1D2D3NN-A20CE1** 185765	1 unit
4.3	0.75	1	–	–	✓			**DC1-1D4D3NN-A20CE1** 185768	
5.8	1.1	1.5	–	✓	✓	FS2		**DC1-1D5D8NB-A20CE1** 185771	
U_e 230 V AC, single-phase / U_2 230 V AC, three-phase Mains voltage (50/60Hz) U_{LN} 200 (-10%) - 240 (+10%) V									
2.3	0.37	0.5	–	–	✓	FS1	IP20/NEMA 0	**DC1-122D3NN-A20CE1** 185785	1 unit
			✓	–	✓			**DC1-122D3FN-A20CE1** 185803	
4.3	0.75	1	–	–	✓			**DC1-124D3NN-A20CE1** 185788	
			✓	–	✓			**DC1-124D3FN-A20CE1** 185806	
7	1.5	2	–	–	✓			**DC1-127D0NN-A20CE1** 185791	
			✓	–	✓			**DC1-127D0FN-A20CE1** 185809	
			–	✓	✓	FS2		**DC1-127D0NB-A20CE1** 185794	
			✓	✓	✓			**DC1-127D0FB-A20CE1** 185812	
10.5	2.2	3	–	✓	✓			**DC1-12011NB-A20CE1** 185797	
			✓	✓	✓			**DC1-12011FB-A20CE1** 185815	
15.3 [5)]	4	5	–	✓	✓	FS3		**DC1-12015NB-A20CE1** 185800	

Notes

[1)] Overload cycle: 150% for 60 s every 600 s
[2)] At 230 V, 50 Hz/at 220 - 240 V, 60 Hz
[3)] For normal internally and externally ventilated four-pole three-phase asynchronous motors with 1500 rpm at 50 Hz and 1800 rpm at 60 Hz
[4)] Rated operational current at a switching frequency of 16 kHz and an ambient air temperature of +50°C
[5)] Rated operational current at a switching frequency of 8 kHz and an ambient air temperature of +50°C

Rated operational current [1) 4)]	Assigned motor output [1) 2) 3)]		Configuration			Frame size	Protection type	**Catalog Number** Article no.	Std. pack
			Radio interference suppression filter	Brake chopper	7-segment display				
I_e A	P kW	P HP							
PowerXL variable frequency drives DC1									
U_e 230 V AC, three-phase / U_2 230 V AC, three-phase Mains voltage (50/60Hz) U_{LN} 200 (-10%) - 240 (+10%) V									
2.3	0.37	0.5	–	–	✓	FS1	IP20/NEMA 0	**DC1-322D3NN-A20CE1** 185818	1 unit
4.3	0.75	1	–	–	✓			**DC1-324D3NN-A20CE1** 185821	
7	1.5	2	–	–	✓			**DC1-327D0NN-A20CE1** 185824	
			–	✓	✓	FS2		**DC1-327D0NB-A20CE1** 185827	
			✓	✓	✓			**DC1-327D0FB-A20CE1** 185836	
10.5	2.2	3	–	✓	✓			**DC1-32011NB-A20CE1** 185830	
			✓	✓	✓			**DC1-32011FB-A20CE1** 185839	
18 [5)]	4	5	–	✓	✓	FS3		**DC1-32018NB-A20CE1** 185833	
			✓	✓	✓			**DC1-32018FB-A20CE1** 185842	
24	5.5	7.5	–	✓	✓			**DC1-32024NB-A20CE1** 185777	
			✓	✓	✓			**DC1-32024FB-A20CE1** 185774	
30	7.5	10	–	✓	✓	FS4		**DC1-32030NB-A20CE1** 185778	
			✓	✓	✓			**DC1-32030FB-A20CE1** 185775	
46	11	15	–	✓	✓			**DC1-32046NB-A20CE1** 185779	
			✓	✓	✓			**DC1-32046FB-A20CE1** 185776	

Notes

[1)] Overload cycle: 150% for 60 s every 600 s
[2)] At 230 V, 50 Hz/at 220 - 240 V, 60 Hz
[3)] For normal internally and externally ventilated four-pole three-phase asynchronous motors with 1500 rpm at 50 Hz and 1800 rpm at 60 Hz
[4)] Rated operational current at a switching frequency of 16 kHz and an ambient air temperature of +50°C
[5)] Rated operational current at a switching frequency of 8 kHz and an ambient air temperature of +50°C

2.2 PowerXL variable frequency drives DC1

DC1, for three-phase motors 400 V, IP20

Rated operational current [1) 4)]	Assigned motor output [1) 2) 3)]		Configuration			Frame size	Protection type	**Catalog Number** Article no.	Std. pack
			Radio interference suppression filter	Brake chopper	7-segment display				
I_e A	P kW	P HP							
PowerXL variable frequency drives DC1									
U_e 400 V AC, three-phase / U_2 400 V AC, three-phase Mains voltage (50/60Hz) U_{LN} 380 (-10%) - 480 (+10%) V									
2.2	0.75	1	–	–	✓	FS1	IP20/NEMA 0	**DC1-342D2NN-A20CE1** 185721	1 unit
			✓	–	✓			**DC1-342D2FN-A20CE1** 185743	
4.1	1.5	2	–	–	✓			**DC1-344D1NN-A20CE1** 185724	
			✓	–	✓			**DC1-344D1FN-A20CE1** 185746	
			–	✓	✓	FS2		**DC1-344D1NB-A20CE1** 185727	
			✓	✓	✓			**DC1-344D1FB-A20CE1** 185749	
5.8	2.2	3	–	✓	✓			**DC1-345D8NB-A20CE1** 185730	
			✓	✓	✓			**DC1-345D8FB-A20CE1** 185752	
9.5	4	5	–	✓	✓			**DC1-349D5NB-A20CE1** 185733	
			✓	✓	✓			**DC1-349D5FB-A20CE1** 185755	
14	5.5	10	–	✓	✓	FS3		**DC1-34014NB-A20CE1** 185736	
			✓	✓	✓			**DC1-34014FB-A20CE1** 185758	
18	7.5		–	✓	✓			**DC1-34018NB-A20CE1** 185739	
			✓	✓	✓			**DC1-34018FB-A20CE1** 185761	
24 [5)]	11	15	–	✓	✓			**DC1-34024NB-A20CE1** 185742	
			✓	✓	✓			**DC1-34024FB-A20CE1** 185764	
30	15	20	–	✓	✓	FS4		**DC1-34030NB-A20CE1** 185783	
			✓	✓	✓			**DC1-34030FB-A20CE1** 185780	
39	18.5	25	–	✓	✓			**DC1-34039NB-A20CE1** 185784	
			✓	✓	✓			**DC1-34039FB-A20CE1** 185781	
46	22	30	–	✓	✓			**DC1-34046NB-A20CE1** 185844	
			✓	✓	✓			**DC1-34046FB-A20CE1** 185782	

Notes

1) Overload cycle: 150% for 60 s every 600 s
2) DC1-34…: at 400 V, 50 Hz/at 440 - 480 V, 60 Hz
3) For normal internally and externally ventilated four-pole three-phase asynchronous motors with 1500 rpm at 50 Hz and 1800 rpm at 60 Hz
4) Rated operational current at a switching frequency of 16 kHz and an ambient air temperature of +50°C
5) Rated operational current at a switching frequency of 8 kHz and an ambient air temperature of +50°C

Rated operational current [1) 4)]	Assigned motor output [1) 2) 3)]		Configuration				Frame size	Protection type	**Catalog Number** Article no.	Std. pack
I_e	P	P	Radio interference suppression filter	Brake chopper	7-segment display	Local controls				
A	kW	HP								
PowerXL variable frequency drives DC1										
U_e 230 V AC, single-phase / U_2 230 V AC, single-phase Mains voltage (50/60Hz) U_{LN} 200 (-10%) - 240 (+10%) V										
4.3	0.37	0.5	✓	–	✓	–	FS1	IP66/NEMA 4X	**DC1-S24D3FN-A66OE1** 199387	1 unit
			✓	–	✓	✓			**DC1-S24D3FN-A6SOE1** 199388	
7	0.75	1	✓	–	✓	–			**DC1-S27D0FN-A66OE1** 199389	
			✓	–	✓	✓			**DC1-S27D0FN-A6SOE1** 199390	
10.5	1.1	1.5	✓	✓	✓	–	FS2		**DC1-S2011FB-A66OE1** 199391	
			✓	✓	✓	✓			**DC1-S2011FB-A6SOE1** 199392	

Notes

1) Overload cycle: 150% for 60 s every 600 s
2) DC1-S2…: at 230 V, 50 Hz/at 220 - 240 V, 60 Hz
3) For AC motors with internal and external ventilation with 50/60 Hz without additional start capacitor
4) Rated operational current at a switching frequency of 16 kHz and an ambient air temperature of +40°C

2.2 PowerXL variable frequency drives DC1

DC1, for three-phase motors 230 V, IP66

Rated operational current [1) 4)]	Assigned motor output [1) 2) 3)]		Configuration				Frame size	Protection type	**Catalog Number** Article no.	Std. pack
I_e	P	P	Radio interference suppression filter	Brake chopper	7-segment display	Local controls				
A	kW	HP								
PowerXL variable frequency drives DC1										
U_e 115 V AC, single-phase / U_2 230 V AC, three-phase The mains voltage of 115 V is raised to 230 V (output voltage) through an internal voltage double connection. Mains voltage (50/60Hz) U_{LN} 110 (-10%) - 115 (+10%) V										
2.3	0.37	0.5	–	–	✓	–	FS1	IP66/NEMA 4X	**DC1-1D2D3NN-A66OE1** 199393	1 unit
			–	–	✓	✓			**DC1-1D2D3NN-A6SOE1** 199394	
4.3	0.75	1	–	–	✓	–			**DC1-1D4D3NN-A66OE1** 199395	
			–	–	✓	✓			**DC1-1D4D3NN-A6SOE1** 199396	
5.8	1.1	1.5	–	✓	✓	–	FS2		**DC1-1D5D8NB-A66OE1** 199397	
			–	✓	✓	✓			**DC1-1D5D8NB-A6SOE1** 199398	
U_e 230 V AC, single-phase / U_2 230 V AC, three-phase Mains voltage (50/60Hz) U_{LN} 200 (-10%) - 240 (+10%) V										
2.3	0.37	0.5	✓	–	✓	–	FS1	IP66/NEMA 4X	**DC1-122D3FN-A66OE1** 199399	1 unit
			✓	–	✓	✓			**DC1-122D3FN-A6SOE1** 199400	
4.3	0.75	1	✓	–	✓	–			**DC1-124D3FN-A66OE1** 199401	
			✓	–	✓	✓			**DC1-124D3FN-A6SOE1** 199402	
7	1.5	2	✓	–	✓	–			**DC1-127D0FN-A66OE1** 199403	
			✓	–	✓	✓			**DC1-127D0FN-A6SOE1** 199404	
			✓	✓	✓	–	FS2		**DC1-127D0FB-A66OE1** 199405	
			✓	✓	✓	✓			**DC1-127D0FB-A6SOE1** 199406	
10.5	2.2	3	✓	✓	✓	–			**DC1-12011FB-A66OE1** 199407	
			✓	✓	✓	✓			**DC1-12011FB-A6SOE1** 199408	
15.3 [5)]	4	5	✓	✓	✓	–	FS3		**DC1-12015FB-A66OE1** 199409	
			✓	✓	✓	✓			**DC1-12015FB-A6SOE1** 199410	

Notes

[1)] Overload cycle: 150% for 60 s every 600 s
[2)] At 230 V, 50 Hz/at 220 - 240 V, 60 Hz
[3)] For normal internally and externally ventilated four-pole three-phase asynchronous motors with 1500 rpm at 50 Hz and 1800 rpm at 60 Hz
[4)] Rated operational current at a switching frequency of 16 kHz and an ambient air temperature of +40°C
[5)] Rated operational current at a switching frequency of 8 kHz and an ambient air temperature of +40°C

Rated operational current [1) 4)]	Assigned motor output [1) 2) 3)]		Configuration				Frame size	Protection type	**Catalog Number** Article no.	Std. pack
I_e	P	P	Radio interference suppression filter	Brake chopper	7-segment display	Local controls				
A	kW	HP								
PowerXL variable frequency drives DC1										
U_e 230 V AC, three-phase / U_2 230 V AC, three-phase Mains voltage (50/60Hz) U_{LN} 200 (-10%) - 240 (+10%) V										
2.3	0.37	0.5	✓	–	✓	–	FS1	IP66/NEMA 4X	**DC1-322D3FN-A66OE1** 199411	1 unit
			✓	–	✓	✓			**DC1-322D3FN-A6SOE1** 199412	
4.3	0.75	1	✓	–	✓	–			**DC1-324D3FN-A66OE1** 199413	
			✓	–	✓	✓			**DC1-324D3FN-A6SOE1** 199414	
7	1.5	2	✓	–	✓	–			**DC1-327D0FN-A66OE1** 199415	
			✓	–	✓	✓			**DC1-327D0FN-A6SOE1** 199416	
			✓	✓	✓	–	FS2		**DC1-327D0FB-A66OE1** 199417	
			✓	✓	✓	✓			**DC1-327D0FB-A6SOE1** 199418	
10.5	2.2	3	✓	✓	✓	–			**DC1-32011FB-A66OE1** 199419	
			✓	✓	✓	✓			**DC1-32011FB-A6SOE1** 199420	
18 [5)]	4	5	✓	✓	✓	–	FS3		**DC1-32018FB-A66OE1** 199421	
			✓	✓	✓	✓			**DC1-32018FB-A6SOE1** 199422	
24 [5)]	5.5	7.5	✓	✓	✓	–			**DC1-32024FB-A66OE1** 199423	
			✓	✓	✓	✓			**DC1-32024FB-A6SOE1** 199424	
30 [5)]	7.5	7.5	✓	✓	✓	–	FS4		**DC1-32030FB-A66OE1** 199425	
			✓	✓	✓	✓			**DC1-32030FB-A6SOE1** 199426	
46 [5)]	11	15	✓	✓	✓	–			**DC1-32046FB-A66OE1** 199427	
			✓	✓	✓	✓			**DC1-32046FB-A6SOE1** 199428	

Notes

[1)] Overload cycle: 150% for 60 s every 600 s
[2)] At 230 V, 50 Hz/at 220 - 240 V, 60 Hz
[3)] For normal internally and externally ventilated four-pole three-phase asynchronous motors with 1500 rpm at 50 Hz and 1800 rpm at 60 Hz
[4)] Rated operational current at a switching frequency of 16 kHz and an ambient air temperature of +40°C
[5)] Rated operational current at a switching frequency of 8 kHz and an ambient air temperature of +40°C

2.2 PowerXL variable frequency drives DC1

DC1, for three-phase motors 400 V, IP66

Rated operational current [1) 4)]	Assigned motor output [1) 2) 3)]		Configuration				Frame size	Protection type	**Catalog Number** Article no.	Std. pack
I_e	P	P	Radio interference suppression filter	Brake chopper	7-segment display	Local controls				
A	kW	HP								
PowerXL variable frequency drives DC1										
U_e 400 V AC, three-phase / U_2 400 V AC, three-phase Mains voltage (50/60Hz) U_{LN} 380 (-10%) - 480 (+10%) V										
2.2	0.75	1	✓	–	✓	–	FS1	IP66/NEMA 4X	**DC1-342D2FN-A66OE1** 199429	1 unit
			✓	–	✓	✓			**DC1-342D2FN-A6SOE1** 199430	
4.1	1.5	2	✓	–	✓	–			**DC1-344D1FN-A66OE1** 199431	
			✓	–	✓	✓			**DC1-344D1FN-A6SOE1** 199432	
			✓	✓	✓	–	FS2		**DC1-344D1FB-A66OE1** 199433	
			✓	✓	✓	✓			**DC1-344D1FB-A6SOE1** 199434	
5.8	2.2	3	✓	✓	✓	–			**DC1-345D8FB-A66OE1** 199435	
			✓	✓	✓	✓			**DC1-345D8FB-A6SOE1** 199436	
9.5	4	5	✓	✓	✓	–			**DC1-349D5FB-A66OE1** 199437	
			✓	✓	✓	✓			**DC1-349D5FB-A6SOE1** 199438	
14 [5)]	5.5	7.5	✓	✓	✓	–	FS3		**DC1-34014FB-A66OE1** 199439	
			✓	✓	✓	✓			**DC1-34014FB-A6SOE1** 199440	
18 [5)]	7.5	10	✓	✓	✓	–			**DC1-34018FB-A66OE1** 199441	
			✓	✓	✓	✓			**DC1-34018FB-A6SOE1** 199442	
24 [5)]	11	15	✓	✓	✓	–			**DC1-34024FB-A66OE1** 199443	
			✓	✓	✓	✓			**DC1-34024FB-A6SOE1** 199444	
30 [5)]	15	20	✓	✓	✓	–	FS4		**DC1-34030FB-A66OE1** 199445	
			✓	✓	✓	✓			**DC1-34030FB-A6SOE1** 199446	
39 [5)]	18.5	25	✓	✓	✓	–			**DC1-34039FB-A66OE1** 199447	
			✓	✓	✓	✓			**DC1-34039FB-A6SOE1** 199448	
46 [5)]	22	30	✓	✓	✓	–			**DC1-34046FB-A66OE1** 199449	
			✓	✓	✓	✓			**DC1-34046FB-A6SOE1** 199450	

Notes

[1)] Overload cycle: 150% for 60 s every 600 s
[2)] At 400 V, 50 Hz/at 440 - 480 V, 60 Hz
[3)] For normal internally and externally ventilated four-pole three-phase asynchronous motors with 1500 rpm at 50 Hz and 1800 rpm at 60 Hz
[4)] Rated operational current at a switching frequency of 16 kHz and an ambient air temperature of +40°C
[5)] Rated operational current at a switching frequency of 8 kHz and an ambient air temperature of +40°C

	Description	Length m	For use with	Catalog Number Article no.	Std. pack
	**External keypad**				
	With 7-digital display assembly Front IP54 With approx. 3 m-long, plug-in connection cable (RJ45, 8-pin)	3	DE1, DE11, DC1, DB1, DA1	**DX-KEY-LED2** 186946	1 unit
	With multi-language plain text display (OLED) Front IP54 With approx. 3 m-long, plug-in connection cable (RJ45, 8-pin)	3	DC1, DB1, DA1, RAM05, RASP5	**DX-KEY-OLED** 169133	
	Expansion modules				
	Output expansion				
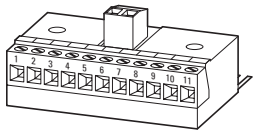	2 relay outputs N/O, 250 V AC/220 V DC, max. 1 A) 1 analog output (0 - +10 V, max. 20 mA) For connecting to the control signal terminals on the DC1	–	DC1	**DXC-EXT-2R01A0** 169030	1 unit
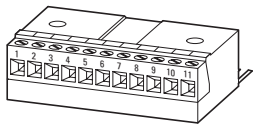	2 relay outputs N/O, 250 V AC/220 V DC, max. 1 A) For connecting to the control signal terminals on the DC1	–	DC1	**DXC-EXT-2R0** 169031	
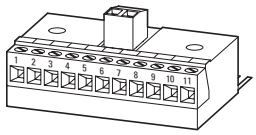	Coupling module				
	115 V AC input (electrically isolated) for 4 digital inputs For connecting to the control signal terminals on the DC1	–	DC1	**DXC-EXT-IO110** 169032	1 unit
	230 V AC input (electrically isolated) for 4 digital inputs For connecting to the control signal terminals on the DC1	–	DC1	**DXC-EXT-IO230** 169033	
	Communication modules				
	Profinet				
	Profinet plug-in module (front) with 2 x RJ45, 8 pole, PROFIdrive profile		DE1, DE11, DC1 (IP20)	**DX-NET-PROFINET2-2** 184947	1 unit
	Ethernet/IP				
	Ethernet/IP plug-in module (front) with 2 x RJ45, 8 pole	–	DE1, DE11, DC1 (IP20)	**DX-NET-ETHERNET2-2** 184969	1 unit
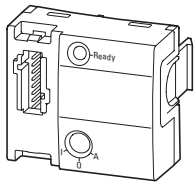	**SmartWire-DT**				
	Plug-in module (front) with slot for SWD4-8SF2-5 external device plug	–	DE1, DE11, DC1 (IP20)	**DX-NET-SWD3** 169131	1 unit
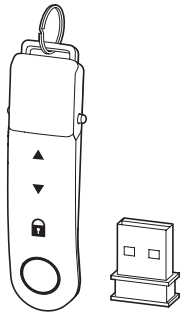	**Parameter assignment**				
	Parameter storage unit and Bluetooth communication stick				
	For storage, copying parameters, and/or transferring parameters to a PC or smartphone (iOS or Android) via Bluetooth with the drivesConnect software or the drivesConnect mobile app respectively With 2 function keys for uploading and downloading parameters with parameter memory.	–	DE1, DE11, DC1, DB1, DA1, RAM05, RASP5	**DX-COM-STICK3-KIT** 197586	1 unit
	Programming cable				
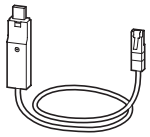	Interface converter USB/RS485 with connection cable, RJ45 8 pole For storage, copying parameters, and/or transferring parameters to a PC with the drivesConnect software, electrically isolated	3	DE1, DE11, DC1, DB1, DA1	**DX-CBL-PC-3M0** 744-A3036-00P	1 unit

Accessories

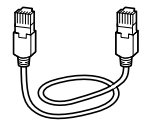



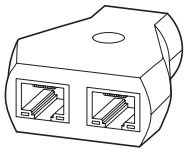

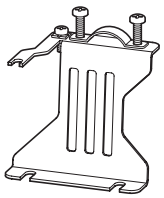

Description		Length m	For use with	Catalog Number Article no.	Std. pack
Connection cable					
Patch cord with RJ45 plugs, 8 pole		0.5	DE1, DE11, DC1, DB1, DA1	**DX-CBL-RJ45-0M5** 169137	1 unit
		1		**DX-CBL-RJ45-1M0** 169138	
		3		**DX-CBL-RJ45-3M0** 169139	
Bus terminating resistor					
RJ45 8 pole Connection to CANopen® (pin 1/2, 124 Ω) or to Modbus RTU (pin 7/8, 120 Ω)		–	DX-SPL-RJ45-2SL-1PL	**EASY-NT-R** 256281	2 unit
Splitter					
RJ45, 8-pin, 3 sockets		–	DX-CBL-RJ45…	**DX-SPL-RJ45-3SL** 169141	1 unit
RJ45, 8-pin, 2 sockets/1 plug		–	DE1, DE11, DC1, DB1, DA1	**DX-SPL-RJ45-2SL1PL** 169142	
Mounting accessories					
Mounting adapter with gland plates					
For installing the connection cables on the mains side	Size FS2	–	DC1 (IP20), DA1 (IP20)	**DX-EMC-MNT-2N** 172927	1 unit
	Size FS3	–	DC1 (IP20), DA1 (IP20)	**DX-EMC-MNT-3N** 172929	
For installing the connection cables on the motor side	Size FS2	–	DC1 (IP20), DA1 (IP20)	**DX-EMC-MNT-2M** 172928	
	Size FS3	–	DC1 (IP20), DA1 (IP20)	**DX-EMC-MNT-3M** 172930	

Engineering

DC1-1DxxxN…

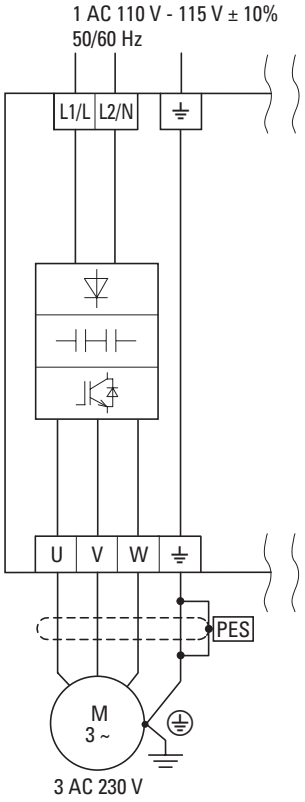

DC1-12…

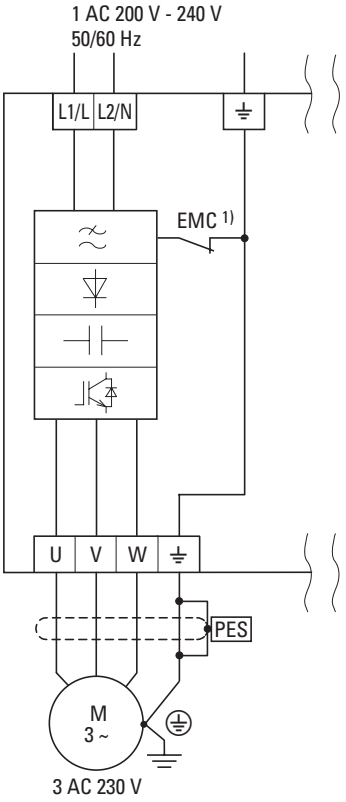

DC1-32…
DC1-34…

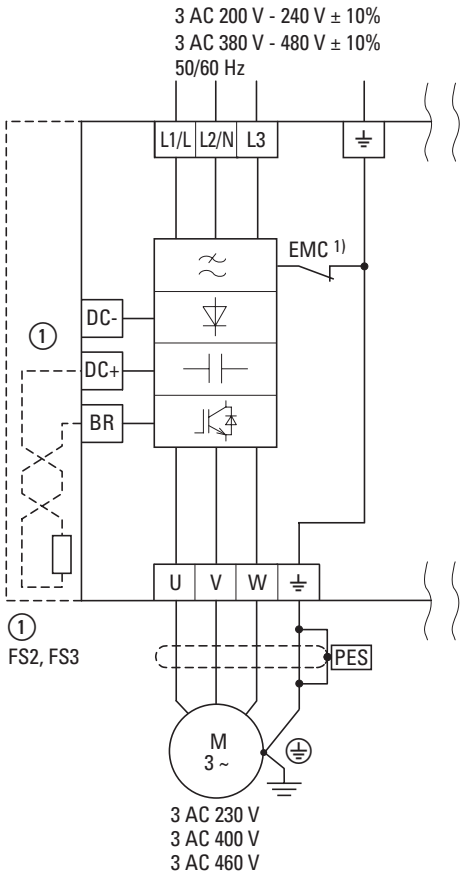

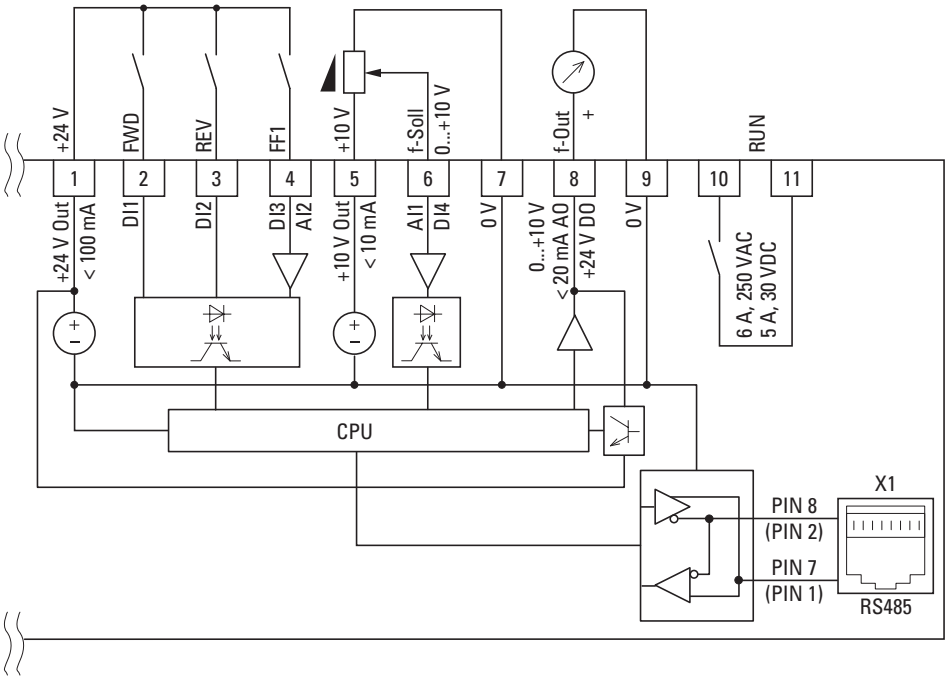

DC1-S1 -A66OE1, DC1-S2 -A66OE

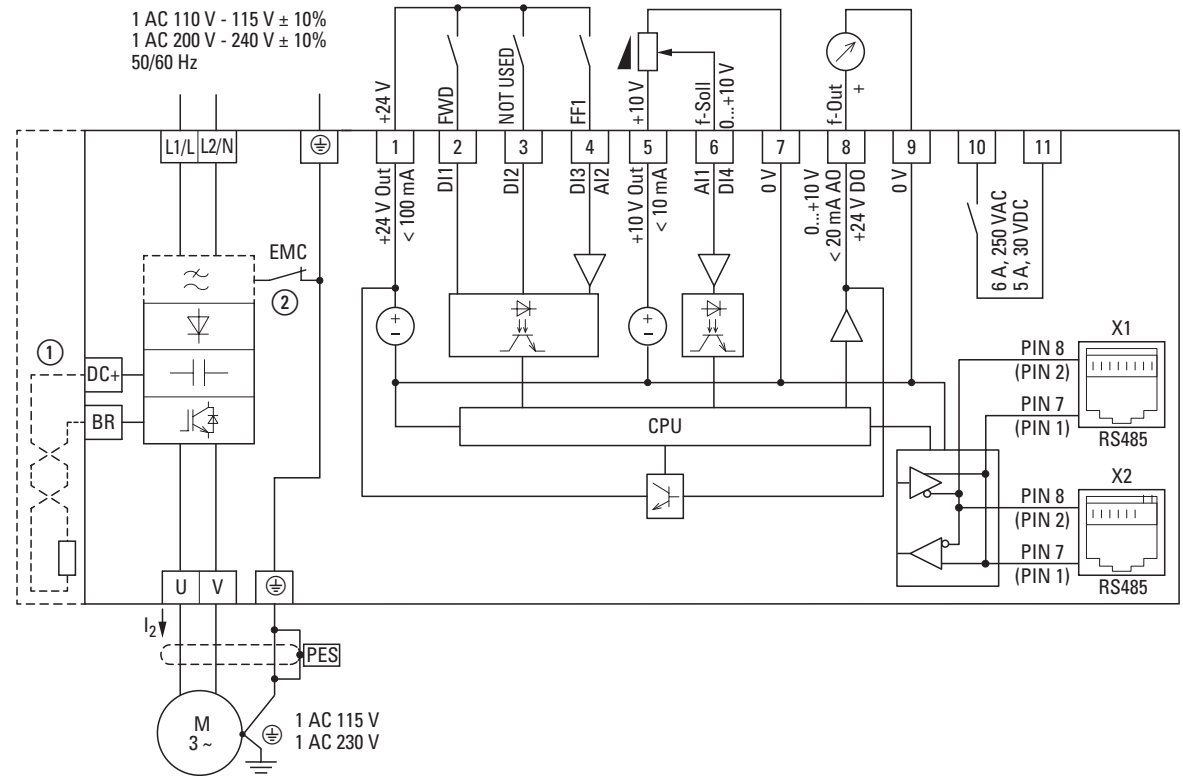

DC1-S1 -A6SOE1, DC1-S2 -A6SOE

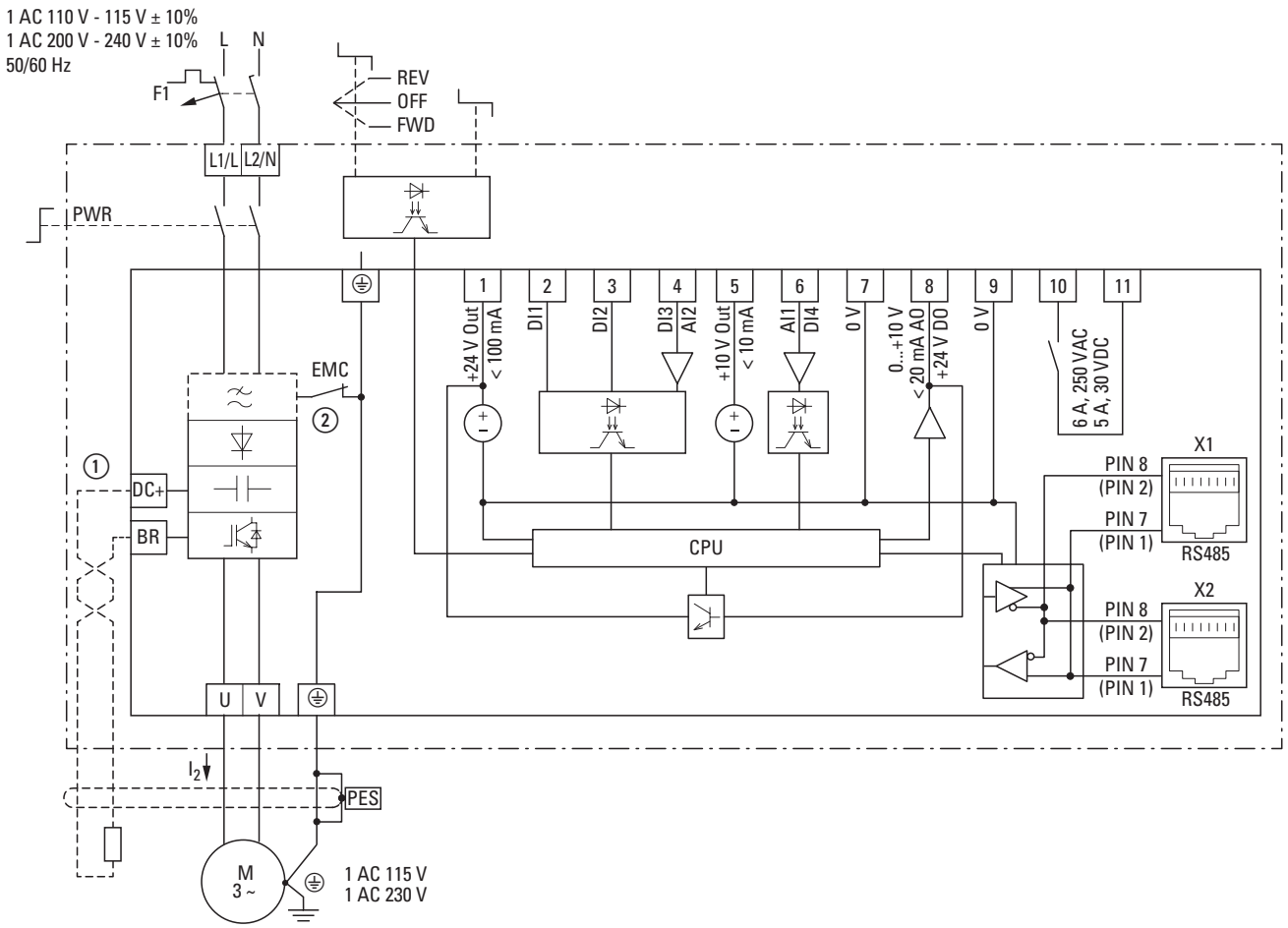

DC1-1D...-A66...

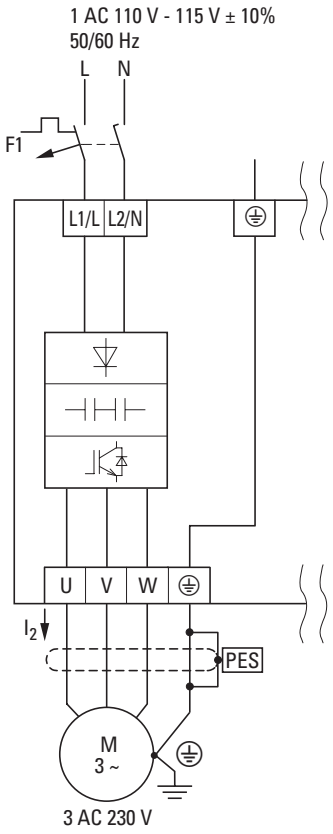

DC1-12...-A66...

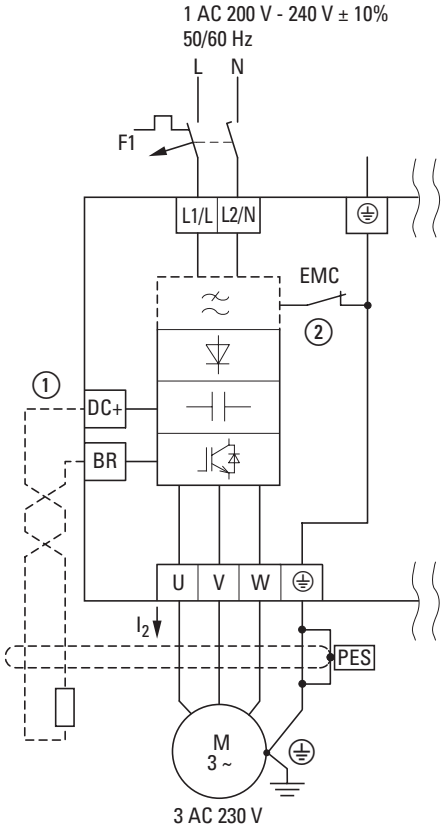

DC1-32...-A66...
DC1-34...-A66...

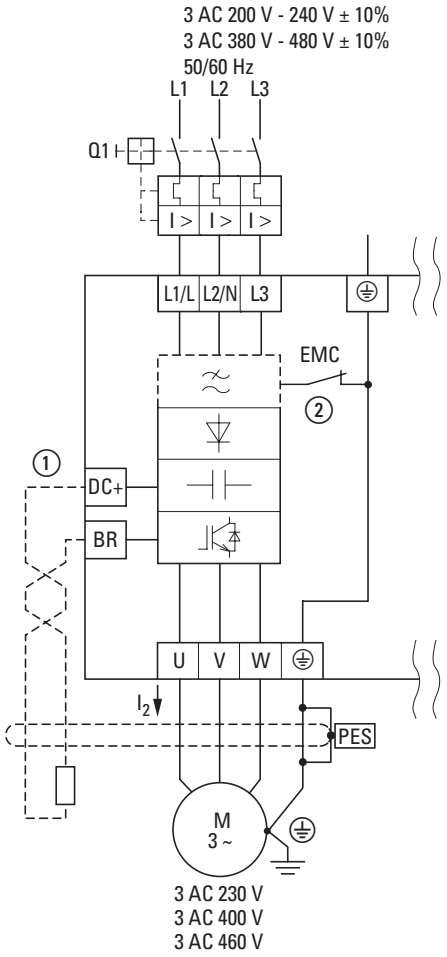

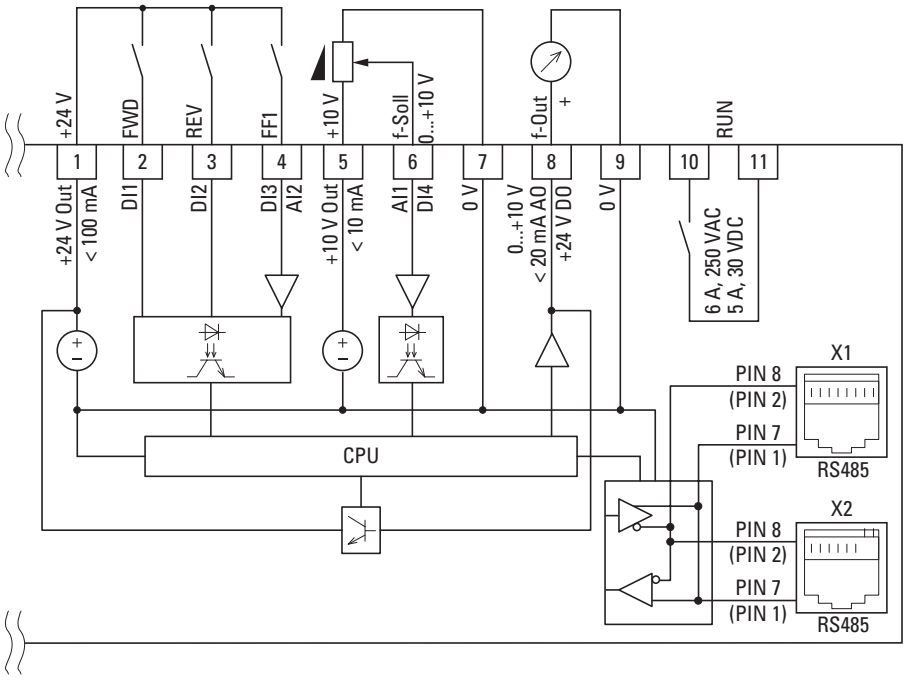

Connection examples

DC1-1D...-A6S...

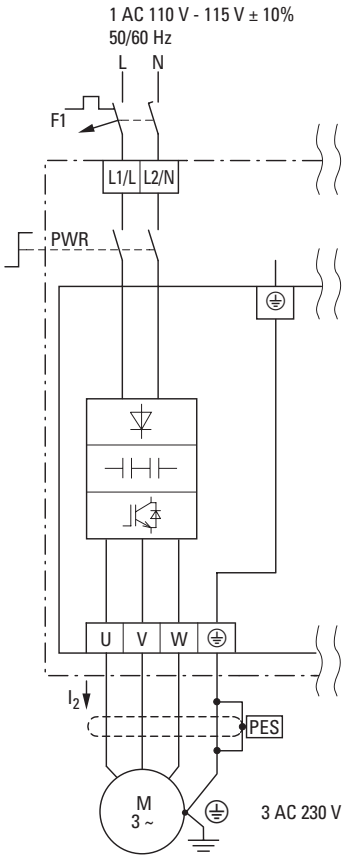

DC1-12...-A6S...

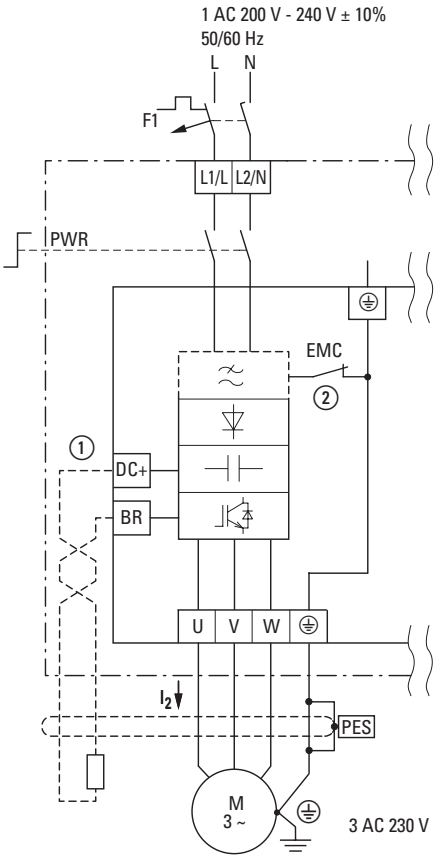

DC1-32...-A6S...
DC1-34...-A6S...

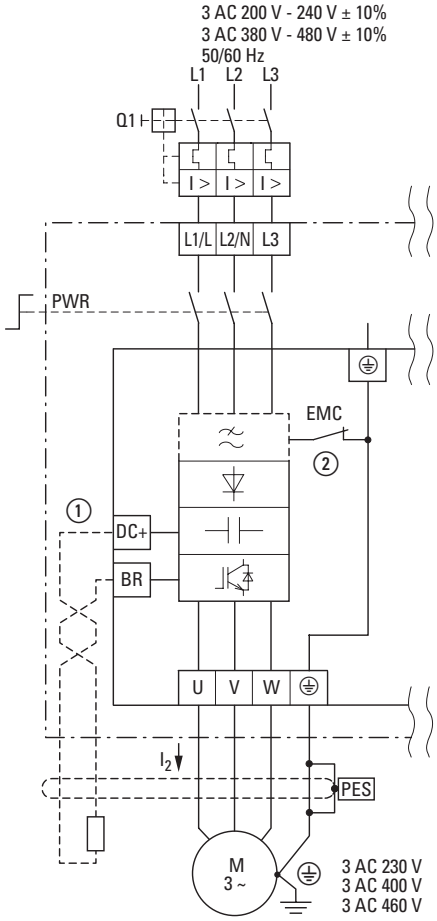

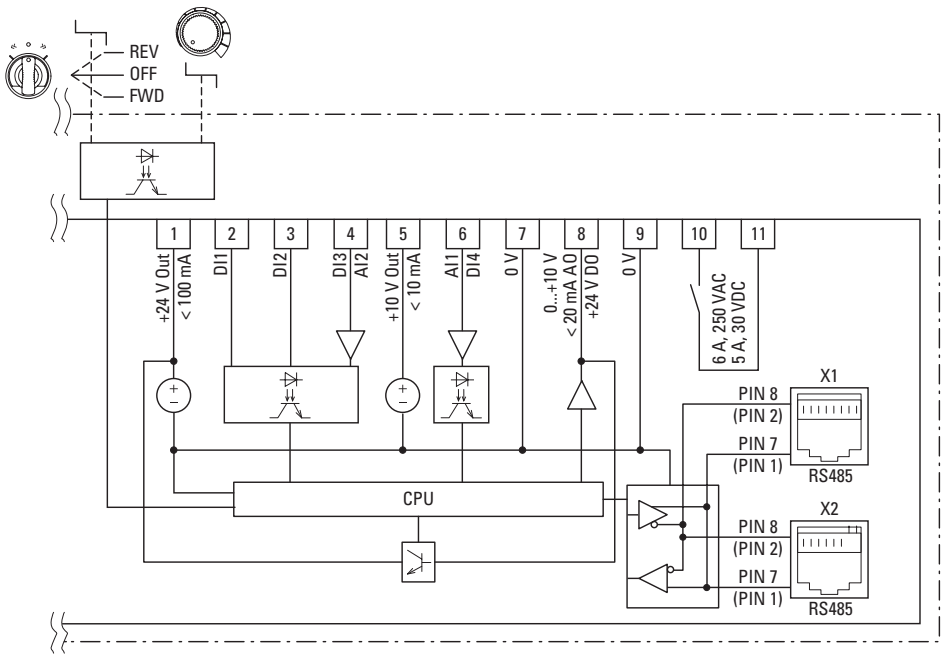

2.2 PowerXL variable frequency drives DC1

Switching and protective devices rated for DC1

Catalog Number	Motor	Variable frequency drives		Mains connection			
	Assigned motor output [1) 2)]	Rated operational current [1)]	Input current	Protection device (fuse or miniature circuit-breaker)		Mains contactor	Mains choke
	I_H = 150%	I_H = 150%	I_H = 150%	IEC (Type B, gG), 150%	UL (Class CC or J)	I_H = 150% (CT/IH, at 50°C)	I_H = 150% (at 50°C)
	P	I_e	I_{LN}				
	kW	A	A		A		
115 V AC, single-phase/115 V AC, single-phase							
DC1-S17D0…	0.37	7	12.9	FAZ-B16/1N	15	DILEM-… + P1DILEM	DX-LN1-018
DC1-S1011…	0.55	10.5	19.2	FAZ-B25/1N	25	DILEM-… + P1DILEM	DX-LN1-024
230 V AC, single-phase/230 V AC, single-phase							
DC1-S24D3…	0.37	4.3	7.5	FAZ-B10/1N	10	DILEM-… + P1DILEM	DX-LN1-009
DC1-S27D0…	0.75	7	12.9	FAZ-B16/1N	15	DILEM-… + P1DILEM	DX-LN1-018
DC1-S2011…	1.1	10.5	19.2	FAZ-B25/1N	25	DILEM-… + P1DILEM	DX-LN1-024
115 V AC, single-phase/230 V AC, three-phase							
DC1-1D2D3…	0.37	2.3	7.8	FAZ-B16/1N	15	DILEM-… + P1DILEM	DX-LN1-009
DC1-1D4D3…	0.75	4.3	15.8	FAZ-B25/1N	25	DILEM-… + P1DILEM	DX-LN1-018
DC1-1D5D8…	1.1	5.8	21.9	FAZ-B32/1N	35	DILEM-… + P1DILEM	DX-LN1-024
230 V AC, single-phase/230 V AC, three-phase							
DC1-122D3…	0.37	2.3	3.7	FAZ-B10/1N	10	DILM7	DX-LN1-006
DC1-124D3…	0.75	4.3	7.5	FAZ-B10/1N	10	DILM7	DX-LN1-009
DC1-127D0…	1.5	7	12.9	FAZ-B16/1N	15	DILM7	DX-LN1-018
DC1-12011…	2.2	10.5	19.2	FAZ-B25/1N	25	DILM7	DX-LN1-024
DC1-12015…	4	15.3	29.2	FAZ-B40/1N	50	DILM7	DX-LN1-032
230 V AC, three-phase/230 V AC, three-phase							
DC1-322D3…	0.37	2.3	3.4	FAZ-B6/3	6	DILM7	DX-LN3-004
DC1-324D3…	0.75	4.3	5.6	FAZ-B6/3	6	DILM7	DX-LN3-006
DC1-327D0…	1.5	7	9.5	FAZ-B10/3	10	DILM7	DX-LN3-010
DC1-32011…	2.2	10.5	12.1	FAZ-B16/3	15	DILM7	DX-LN3-016
DC1-32018…	4	18	20.9	FAZ-B20/3	20	DILM7	DX-LN3-025
DC1-32030…	7.5	30	33.3	FAZ-B40/3	–	DILM17	DX-LN3-040
DC1-32046…	11	46	50.1	FAZ-B63/3	–	DILM40	DX-LN3-060
400 V AC, three-phase/400 V AC, three-phase							
DC1-342D2…	0.75	2.2	3.5	FAZ-B6/3	6	DILM7	DX-LN3-004
DC1-344D1…	1.5	4.1	5.6	FAZ-B6/3	6	DILM7	DX-LN3-006
DC1-345D8…	2.2	5.8	7.5	FAZ-B10/3	10	DILM7	DX-LN3-010
DC1-349D5…	4	9.5	11.5	FAZ-B16/3	15	DILM7	DX-LN3-016
DC1-34014…	5.5	14	17.2	FAZ-B20/3	20	DILM7	DX-LN3-025
DC1-34018…	7.5	18	21.2	FAZ-B25/3	25	DILM7	DX-LN3-025
DC1-34024…	11	24	27.5	FAZ-B32/3	35	DILM17	DX-LN3-040
DC1-34030…	15	30	34.2	FAZ-B40/3	–	DILM17	DX-LN3-040
DC1-34046…	22	46	51.9	FAZ-B63/3	–	DILM40	DX-LN3-060

Notes

[1)] Overload cycle for 60 s every 600 s

[2)] For normal internally and externally ventilated four-pole three-phase asynchronous motors with 1500 rpm at 50 Hz and 1800 rpm at 60 Hz

[3)] Optional external radio interference suppression filter for longer motor cable lengths and for use in different EMC environments

Mains connection	**DC link connection**		**Motor feeder**	
Radio interference suppression filter (external, 150%) [3]	Braking resistance		Motor choke	Sine filter
	10% duty factor (ED)	20% duty factor (ED)	I_H = 150% (CT/I_H, at 50°C)	I_H = 150% (CT/I_H, at 50°C)
DX-EMC12-014-FS1	–	–	–	–
DX-EMC12-025-FS2	DX-BR3-100	–	–	–
DX-EMC12-014-FS1	–	–	–	–
DX-EMC12-014-FS1	–	–	–	–
DX-EMC12-025-FS2	DX-BR3-100	–	–	–
DX-EMC12-014-FS1	–	–	DX-LM3-008	DX-SIN3-004
DX-EMC12-019-FS1	–	–	DX-LM3-008	DX-SIN3-010
DX-EMC12-025-FS2	–	–	DX-LM3-008	DX-SIN3-010
DX-EMC12-014-FS1	–	–	DX-LM3-008	DX-SIN3-004
DX-EMC12-014-FS1	–	–	DX-LM3-008	DX-SIN3-010
DX-EMC12-014-FS1	–	–	DX-LM3-008	DX-SIN3-010
DX-EMC12-025-FS2	DX-BR050-0K4	DX-BR050-0K8	DX-LM3-016	DX-SIN3-016
DX-EMC12-031-FS3	DX-BR050-0K4	DX-BR050-0K8	DX-LM3-016	DX-SIN3-016
DX-EMC34-008	–	–	DX-LM3-008	DX-SIN3-004
DX-EMC34-008	–	–	DX-LM3-008	DX-SIN3-010
DX-EMC34-016	–	–	DX-LM3-008	DX-SIN3-010
DX-EMC34-016	DX-BR050-0K4	DX-BR050-0K8	DX-LM3-016	DX-SIN3-016
DX-EMC34-030	DX-BR050-0K4	DX-BR050-0K8	DX-LM3-035	DX-SIN3-023
DX-EMC34-042	DX-BR022-1K4	DX-BR022-3K1	DX-LM3-035	DX-SIN3-032
DX-EMC34-055	DX-BR022-1K4	DX-BR022-3K1	DX-LM3-050	DX-SIN3-048
DX-EMC34-008	–	–	DX-LM3-008	DX-SIN3-004
DX-EMC34-008	–	–	DX-LM3-008	DX-SIN3-010
DX-EMC34-008	DX-BR100-0K8	DX-BR100-1K6	DX-LM3-008	DX-SIN3-010
DX-EMC34-016	DX-BR100-0K8	DX-BR100-1K6	DX-LM3-011	DX-SIN3-010
DX-EMC34-030	DX-BR047-3K1	DX-BR047-5K1	DX-LM3-016	DX-SIN3-016
DX-EMC34-030	DX-BR047-3K1	DX-BR047-5K1	DX-LM3-035	DX-SIN3-023
DX-EMC34-030	DX-BR047-3K1	DX-BR047-5K1	DX-LM3-035	DX-SIN3-023
DX-EMC34-042	DX-BR022-5K1	DX-BR022-9K2	DX-LM3-035	DX-SIN3-032
DX-EMC34-055	DX-BR022-5K1	DX-BR022-9K2	DX-LM3-050	DX-SIN3-048

Technical specifications

	Symbol	Unit	Value
General			
Standards			EMC: EN 61800-3:2004+A1-2012 Radio interference: EN 55011: 2010 Security: EN 61800-5: 2007 Degree of protection: EN 60529: 1992 Soiling: IEC 721-3-3
Certifications and manufacturer's declarations on conformity			CE, UL, cUL, c-Tick, UkrSEPRO, Gost-R
Production quality			RoHS, ISO 9001
Climatic proofing	ρw	%	< 95%, average relative humidity (RH), non-condensing (EN 50178)
Ambient temperature			
Operation			
IP20 (NEMA 0)	ϑ	°C	-10 - +50 without derating -10 - +45 at DC1-12011… and DC1-32011…, UL compliance over a period of 24 hours
IP66 (NEMA 4X)	ϑ	°C	-20 - +40 without derating
Storage	ϑ	°C	-40 - +60 (frost-free and condensation-free)
Pollution degree			Non-conductive dust permissible
Transport			IP20: Class 1C2 (chemical gases), Class 1S2 (solid particles) IP66: Class 1C3 (chemical gases), Class 1S3 (solid particles)
Storage			IP20: Class 2C2 (chemical gases), Class 2S2 (solid particles) IP66: Class 2C3 (chemical gases), Class 2S3 (solid particles)
Operation			IP20: Class 3C2 (chemical gases), Class 3S2 (solid particles) IP66: Class 3C3 (chemical gases), Class 3S3 (solid particles)
Vibration level (not evaluated during operation)			
Shock test			
Pulse shape			Half sinus
Top acceleration			15 g
Time Window			11 ms
Vibration test			
Frequency range	f	Hz	10 - 150 10 - 57.55: 0.15 mm peak-peak 57.55 - 150: 1 g Top acceleration
Vibration evaluation			1 octave/minute
MTBF (mean time between failures)		Years	157
Electrostatic discharge (ESD, EN 61000-4-2:2009	U	kV	±4, contact discharge / ±8, air discharge
Fast transient burst (EFT/B, EN 61000-4-4: 2004)	U	kV	±1, at 5 kHz, control signal terminal ±2, at 5 kHz, motor connection terminals, single-phase mains connection terminals ±4, at 5 kHz, three-phase mains connection terminals
Overvoltage (surge, EN 61000-4-5: 2006)			
110 - 115 V, 200 - 240 V	U	kV	±1, phase to phase/neutral conductor ±2, phase/neutral conductor to earth
380 - 480 V	U	kV	±2, phase to phase ±4, phase to earth
Electric strength (flash, EN 61800-5-1: 2007)			
110 - 115 V, 200 - 240 V	U	kV	1.5
380 - 480 V	U	kV	2.5
Radio interference class (EMC)			
Maximum screened motor cable length with integrated radio interference suppression filter			
Category C1	l	m	1, only for DC1-122D3F… to DC1-12011F…(FS1, FS2)
Category C2	l	m	5
Category C3	l	m	25
Mounting position			vertical
Altitude	h	m	0 - 1000 above sea level, > 1000 with 1% load current reduction every 100 m, maximum 2000 with UL approval, maximum 4000 without UL approval
Protection type			IP20 (NEMA 0) / IP66 (NEMA 4X)
Protection against contact			BGV A3 (VBG4, finger- and back-of-hand proof)

	Symbol	Unit	Value
Main circuit / power section			
Feeder			
Rated operating voltage			
DC1-1D…	U_e	V	1~ 110 (110 V (-10%) - 115 V (+10%), → U_2 = 230 V)
DC1-12…	U_e	V	1~ 230 (200 V (-10%) - 240 V (+10%))
DC1-32…	U_e	V	3~ 230 (200 V (-10%) - 240 V (+10%))
DC1-34…	U_e	V	3~ 400 (380 V (-10%) - 480 V (+10%))
Single-phase power supply with DC1-3… units			When powered with a single-phase power supply, variable frequency drives from the DC1-32… and DC1-34... series can be operated with a maximum of 50% of the device's rated operational current (Ie).
Mains frequency	f	Hz	50/60 ±10%
Phase Imbalance		%	max. 3
Maximum short-circuit current (supply voltage)	SCCR	kA	100
Mains switch-on frequency			Maximum of one time every 30 seconds
Mains network configuration (AC supply system)			TN and TT network with directly earthed neutral point. IT earthing systems with PCM insulation monitoring relays only. Operation on phase-earthed networks is only permissible up to a maximum phase-earth voltage of 300 V AC.
Inrush current	I	A	< I_{LN}
Motor feeder			
Output voltage			
DC1-1D…	U_2	V	3~ 0 - 2 x U_e (voltage doubler)
DC1-12…, DC1-32…, DC1-34…	U_2	V	3~ 0 - U_e
Maximum Motor Power Cable Length	l	m	100 (screened) 200 (unshielded)
Assigned motor output			
at 230 V, 50 Hz	P	kW	0.37 - 4
at 400 V, 50 Hz	P	kW	0.75 - 22
Output Frequency			
Range, parameterizable	f_2	Hz	0 - 50/60 (max. 500 Hz)
Resolution		Hz	0.1
Rated operational current	I_e	A	2.3 - 46
Overload current for 60 s every 600 s	I_L	%	150
Overload current for 2.5 s every 600 s	I_L	%	175
Switching frequency (double modulation)	f_{PWM}	kHz	max. 32
Operating mode			
V/Hz control (speed accuracy)			±20%, with slip compensation
Vector control (static speed accuracy)			±0.033% ±1% load range: 0 - 100%
Torque response time	t_r	ms	1 - 8
Torque linearity			±5% (10 - 90% of speed variable range, 20 - 100% of torque load range)
Response time (enable IGBT)	t_r	ms	< 10
DC braking			
Time before start	t	s	0 - 25, in the event of a stop
Motor pick-up control function (for catching spinning motors)			all frame sizes
Brake chopper			only for sizes FS2 to FS4
Braking current during continuous operation		%	100 (I_e)
Maximum braking current		%	150 for 60 s

General rated operational data

	Symbol	Unit	Value
Control section			
Control voltage			
Output voltage (control signal terminal 1)	U_C	V DC	24
Load rating (control signal terminal 1)	I_1	mA	100
Reference voltage (control signal terminal 5)	U_S	V DC	10
Load rating (control signal terminal 5)	I_5	mA	10
Digital Input (DI)			
Qty.			2 - 4
Logic (level)			increase (NPN)
Time of reaction	t_r	ms	< 8
Input voltage range High (1)	U_C	V DC	8 - 30
Input voltage range Low (0)	U_C	V DC	0 - 4
Analog Input (AI)			
Qty.			0 - 2
Resolution			12 bits
Accuracy		%	< 1 to the final value
Time of reaction	t_r	ms	< 16
Input voltage range	U_S	V	0 - 10, DC (R_i ~ 72 kΩ)
Input current range	I_S	mA	0/4 - 20 (R_B ~ 500 Ω)
Relay output (RO1)			
Qty.			1 relays
Relay contact			Make
Switching capacity			
AC	I	A	6 (250 V AC)
DC	I	A	5 (30 V AC)
Digital Output (DO)			
Qty.			0 - 1
Output voltage	U_{Out}	V	+24
Load rating (control signal terminal 8)	I_8	mA	20 max.
Analog Output (AO)			
Qty.			0 - 1
Output voltage	U_{Out}	V	0 - +10
Load rating (control signal terminal 8)	I_8	mA	20 (maximum)
Resolution		Bit	10
Accuracy		%	< 1 to the final value
Interface (RJ45)			OP bus, Modbus RTU, CANopen, RS485
Response time (after valid command)	t_r	ms	< 8 (Modbus, CANopen) < 8 (OP bus: Master slave, 60 ms cycle)

Variable frequency drives with voltage doubler
U_{LN} = 2 x U_2: 115 V → 230 V

Size	Symbol	Unit	2D3	4D3	5D8
DC1-1D…device series					
Rated operational current	I_e	A	2.3	4.3	5.8
Overload current for 60 s every 600 s	I_L	A	3.45	6.45	8.7
Overload current for 2.5 s every 600 s	I_L	A	4.03	7.53	10.15
Apparent power at rated operation[1] 230 V	S	kVA	0.92	1.71	2.31
Assigned motor power					
at 230 V, 50 Hz	P	kW	0.37	0.75	1.1
at 220 - 240 V, 60 Hz	P	HP	0.5	1	1.5
Power side (primary side):					
Number of phases			single-phase or two-phase		
Device Voltage Rating	U_{LN}	V	110 (-10%) - 115 (+10%), 48 - 62 Hz 99 - 126 ±0%		
Input current (phase current)	I_{LN}	A	7.8	15.8	21.9
Minimum braking resistance	R_B	Ω	–	–	100
Switching frequency (pulse frequency)					
Default settings	f_{PWM}	kHz	8	8	8
Setting range	f_{PWM}	kHz	4 - 32	4 - 32	4 - 32
Voltage Boost (U_{Boost}/U_{LN})					
Default settings		%	3	3	2.5
Max Value		%	25	25	20
Maximum leakage current (contact current) to earth (PE), at U_{LN}: 120 V, without motor	I_{Touch}	mA	4.8	4.8	4.8
Efficiency	η		0.95	0.95	0.95
Heat dissipation					
at I_e (150%)	P_V	W	18.5	37.5	44
During no-load running, standby (locked, without fan)	P_V	W	3.07	3.07	4.51
Fans			–	✓[1]	✓[1]
Frame size			FS1	FS1	FS2

Notes [1] Not with IP66 degree of protection

2.2 PowerXL variable frequency drives DC1

Specific rated operational data

Size	Symbol	Unit	2D3	4D3	7D0NN 7D0FN	7D0NB 7D0FB	011	015
DC1-12…device series								
Rated operational current	I_e	A	2.3	4.3	7	7	10.5	15
Overload current for 60 s every 600 s	I_L	A	3.45	6.45	10.5	10.5	15.75	22.5
Overload current for 2.5 s every 600 s	I_L	A	4.03	7.53	12.25	12.25	18.38	26.25
Apparent power at rated operation 230 V	S	kVA	0.92	1.71	2.79	2.79	4.18	5.98
Apparent power at rated operation 240 V	S	kVA	0.96	1.79	2.91	2.91	4.36	6.24
Assigned motor power								
at 230 V, 50 Hz	P	kW	0.37	0.75	1.5	1.5	2.2	4
at 220 - 240 V, 60 Hz	P	HP	0.5	1	2	2	3	5
Power side (primary side):								
Number of phases			single-phase or two-phase					
Device Voltage Rating	U_{LN}	V	200 (-10%) - 240 (+10%), 50/60 Hz 180 - 264 ±0%, 48 - 62 Hz ±0%					
Input current (phase current)	I_{LN}	A	3.7	7.5	12.9	12.9	19.2	29.2
Minimum braking resistance	R_B	Ω	–	–	–	100	50	25
Switching frequency (pulse frequency)								
Default settings	f_{PWM}	kHz	8	8	8	8	8	8
Setting range	f_{PWM}	kHz	4 -32	4 -32	4 -32	4 -32	4 -32	4 -24
Voltage Boost (U_{Boost}/U_{LN})								
Default settings		%	3	3	3	2.5	2.5	2
Max Value		%	25	25	25	20	20	15
Maximum leakage current to earth (PE), at U_{LN}: 240 V, without motor	I_{PE}	mA	4.8	4.8	4.8	4.8	4.8	4.7
Efficiency	η		0.95	0.94	0.96	0.96	0.95	0.96
Heat dissipation								
at I_e (150%)	P_V	W	18.5	45.75	63	63	103.4	160
During no-load running, standby (locked, without fan)	P_V	W	3.07	3.07	3.07	4.51	4.51	5.16
Fans			–	✓ [1]	✓ [1]	✓ [1]	✓ [1]	✓ [1]
Frame size			FS1	FS1	FS1	FS2	FS2	FS3

Notes [1] Not with IP66 degree of protection

Size	Symbol	Unit	2D3	4D3	7D0NN	7D0NB 7D0FB
DC1-32…device series						
Rated operational current	I_e	A	2.3	4.3	7	7
Overload current for 60 s every 600 s	I_L	A	3.45	6.45	10.5	10.5
Overload current for 2.5 s every 600 s	I_L	A	4.03	7.53	12.25	12.25
Apparent power at rated operation 230 V	S	kVA	0.92	1.71	2.79	2.79
Apparent power at rated operation 240 V	S	kVA	0.96	1.79	2.91	2.91
Assigned motor power						
at 230 V, 50 Hz	P	kW	0.37	0.75	1.5	1.5
at 220 - 240 V, 60 Hz	P	HP	0.5	1	2	2
Power side (primary side):						
Number of phases			3	3	3	3
Device Voltage Rating	U_{LN}	V	200 (-10%) - 240 (+10%), 50/60 Hz 180 - 264 ±0%, 48 - 62 Hz ±0%			
Input current (phase current)	I_{LN}	A	3.4	5.6	9.5	8.9
Minimum braking resistance	R_B	Ω	–	–	–	100
Switching frequency (pulse frequency)						
Default settings	f_{PWM}	kHz	8	8	8	8
Setting range	f_{PWM}	kHz	4 - 32	4 - 32	4 - 32	4 - 32
Voltage Boost (U_{Boost}/U_{LN})						
Default settings		%	3	3	3	2.5
Max Value		%	25	25	25	20
Maximum leakage current (contact current) to earth (PE), at U_{LN}: 240 V, without motor	I_{Touch}	mA	7.5	7.5	7.5	7.2
Efficiency	η		0.96	0.95	0.96	0.96
Heat dissipation						
at I_e (150%)	P_V	W	14.8	39.75	61.5	61.5
During no-load running, standby (locked, without fan)	P_V	W	3.07	3.07	3.07	4.51
Fans			–	✓ [1]	✓ [1]	✓ [1]
Frame size			FS1	FS1	FS1	FS2

Notes [1] Not with IP66 degree of protection

2.2 PowerXL variable frequency drives DC1

Specific rated operational data

Size	Symbol	Unit	011	018	024	030	046
DC1-32…device series							
Rated operational current	I_e	A	10.5	18	24	30	46
Overload current for 60 s every 600 s	I_L	A	15.75	27	36	45	69
Overload current for 2.5 s every 600 s	I_L	A	18.38	31.5	42	52.5	80.5
Apparent power at rated operation 230 V	S	kVA	4.18	7.17	9.55	11.94	18.30
Apparent power at rated operation 240 V	S	kVA	4.36	7.48	9.96	12.46	19.10
Assigned motor power							
at 230 V, 50 Hz	P	kW	2.2	4	5.5	7.5	11
at 220 - 240 V, 60 Hz	P	HP	3	5	7.5	10	15
Power side (primary side):							
Number of phases			3	3	3	3	3
Device Voltage Rating	U_{LN}	V	200 - (10%) - 264 (+10%), 50/60 Hz 180 - 264 ±0%, 48 - 62 Hz ±0%				
Input current (phase current)	I_{LN}	A	12.1	20.9	26.4	33.3	50.1
Minimum braking resistance	R_B	Ω	50	25	20	15	10
Switching frequency (pulse frequency)							
Default settings	f_{PWM}	kHz	8	8	8	8	8
Setting range	f_{PWM}	kHz	4 - 32	4 - 24	4 - 24	4 - 24	4 - 24
Voltage Boost (U_{Boost}/U_{LN})							
Default settings		%	2.5	2	2	1.5	1.5
Max Value		%	20	15	15	10	10
Maximum leakage current (contact current) to earth (PE), at U_{LN}: 240 V, without motor	I_{Touch}	mA	7.2	6.8	6.8	6.9	6.9
Efficiency	η		0.96	0.96	0.97	0.97	0.96
Heat dissipation							
at I_e (150%)	P_V	W	90.2	160	223	304	446
During no-load running, standby (locked, without fan)	P_V	W	4.51	5.16	5.16	7.54	7.54
Fans			✓ [1]	✓ [1]	✓ [1]	✓	✓
Frame size			FS2	FS3	FS3	FS4	FS4

Notes [1] Not with IP66 degree of protection

Size	Symbol	Unit	2D2	4D1NN 4D1FN	4D1NB 4D1FB	5D8	9D5
DC1-34…device series							
Rated operational current	I_e	A	2.2	4.1	4.1	5.8	9.5
Overload current for 60 s every 600 s	I_L	A	3.3	6.15	6.15	8.7	14.25
Overload current for 3.75 s every 600 s	I_L	A	3.85	7.18	7.18	10.15	16.63
Apparent power at rated operation 400 V	S	kVA	1.52	2.84	2.84	4.02	6.58
Apparent power at rated operation 480 V	S	kVA	1.83	3.41	3.41	4.82	7.9
Assigned motor power							
at 400 V, 50 Hz	P	kW	0.75	1.5	1.5	2.2	4
at 460 V, 60 Hz	P	HP	1	2	2	3	5
Power side (primary side):							
Number of phases			3	3	3	3	3
Device Voltage Rating	U_{LN}	V	380 (-10%) - 480 (+10%), 50/60 Hz 342 - 528 V ±0%, 48 - 62 Hz ±0%				
Input current (phase current)	I_{LN}	A	3.5	5.6	5.6	7.5	11.5
Minimum braking resistance	R_B	Ω	–	–	250	200	120
Switching frequency (pulse frequency)							
Default settings	f_{PWM}	kHz	8	8	8	8	8
Setting range	f_{PWM}	kHz	4 - 32	4 - 32	4 - 32	4 - 32	4 - 32
Voltage Boost (U_{Boost}/U_{LN})							
Default settings		%	3	3	2.5	2.5	2.5
Max Value		%	25	25	20	20	20
Maximum leakage current (contact current) to earth (PE), at U_{LN}: 400 V, without motor	I_{Touch}	mA	13	13	12.6	12.6	12.6
Efficiency	η		0.92	0.95	0.95	0.95	0.97
Heat dissipation							
at I_e (150%)	P_V	W	33.75	66.5	66.5	101.2	136
During no-load running, standby (locked, without fan)	P_V	W	4.55	4.55	6.44	6.44	6.44
Fans			✓ [1]	✓ [1]	✓ [1]	✓ [1]	✓ [1]
Frame size			FS1	FS1	FS2	FS2	FS2

Notes [1] Not with IP66 degree of protection

2.2 PowerXL variable frequency drives DC1

Specific rated operational data

Size	Symbol	Unit	014	018	024	030	039	046
DC1-34…device series								
Rated operational current	I_e	A	14	18	24	30	39	46
Overload current for 60 s every 600 s	I_L	A	21	27	36	45	58.5	69
Overload current for 3.75 s every 600 s	I_L	A	24.5	31.5	42	52.5	68.25	80.5
Apparent power at rated operation 400 V	S	kVA	9.67	12.47	16.63	20.76	26.99	31.83
Apparent power at rated operation 480 V	S	kVA	11.64	14.96	19.95	24.91	32.39	38.20
Assigned motor power								
at 400 V, 50 Hz	P	kW	5.5	7.5	11	15	18.5	22
at 460 V, 60 Hz	P	HP	7.5	10	15	20	25	30
Power side (primary side):								
Number of phases			3	3	3	3	3	3
Device Voltage Rating	U_{LN}	V	380 (-10%) - 480 (+10%), 50/60 Hz 342 - 528 V ±0%, 48 - 62 Hz ±0%					
Input current (phase current)	I_{LN}	A	17.2	21.2	27.5	34.2	44.1	51.9
Minimum braking resistance	R_B	Ω	100	80	50	30	22	22
Switching frequency (pulse frequency)								
Default settings	f_{PWM}	kHz	8	8	8	8	8	8
Setting range	f_{PWM}	kHz	4 - 24	4 - 24	4 - 24	4 - 24	4 - 24	4 - 24
Voltage Boost (U_{Boost}/U_{LN})								
Default settings		%	2	2	2	2	1.5	1.5
Max Value		%	15	15	15	10	10	10
Maximum leakage current to earth (PE), at U_{LN}: 400 V, without motor	I_{Touch}	mA	12.7	12.7	12.7	12.9	12.9	12.9
Efficiency	η		0.96	0.97	0.97	0.97	0.97	0.96
Heat dissipation								
at I_e (150%)	P_V	W	223	304	446	607	728	801
During no-load running, standby (locked, without fan)	P_V	W	6.42	6.42	6.52	14.6	14.6	14.6
Fans			✓ [1]	✓ [1]	✓ [1]	✓	✓	✓
Frame size			FS3	FS3	FS3	FS4	FS4	FS4

Notes [1] Not with IP66 degree of protection

Dimensions and weights

Sizes FS1 to FS3 in IP20

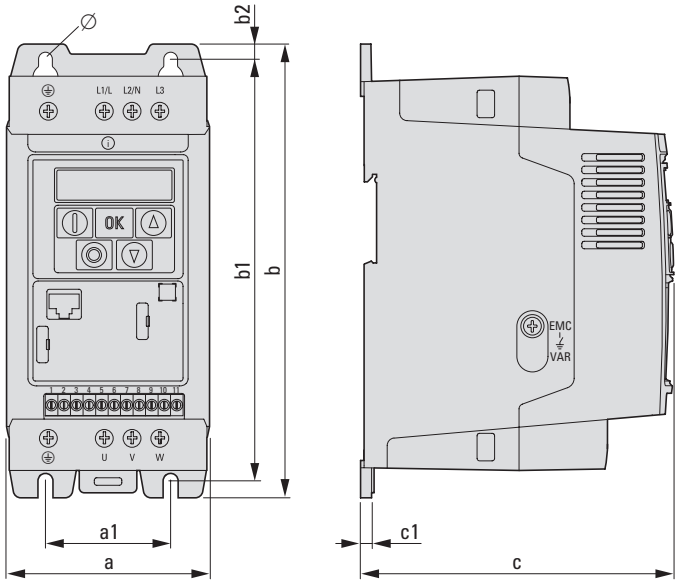

Size	a	a1	b	b1	b2	c	c1	Ø1	Ø2	m
	mm	mm	mm	mm	mm	mm	mm	mm	mm	kg
FS1	81	50	184	170	7	124	4	6	12	1.1
FS2	107	75	231	215	8	152	5	6	12	2.6
FS3	131	100	273	255	8.5	175	5	6	12	4

Size FS4 in IP20

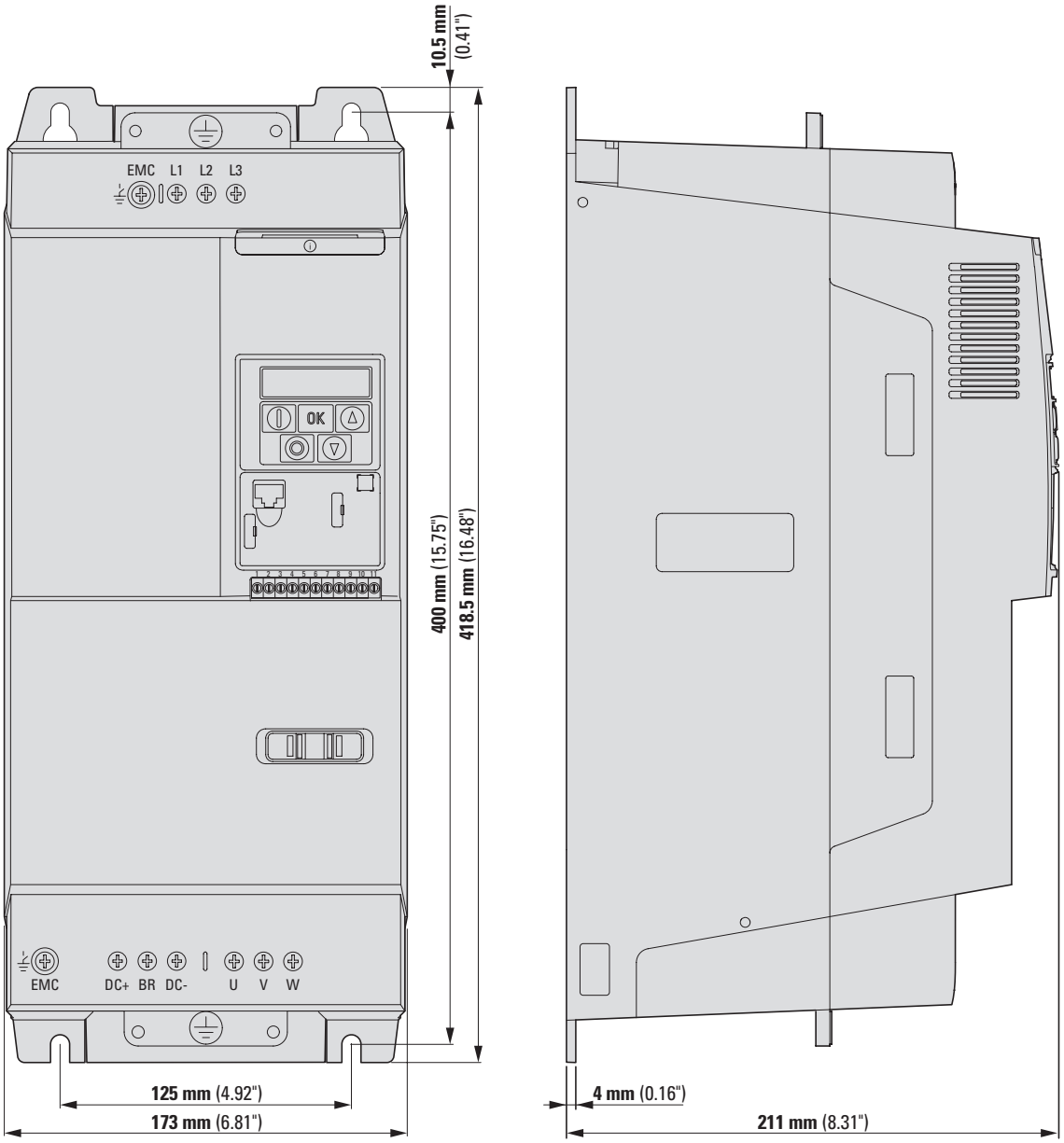

Sizes FS1 to FS4 in IP66

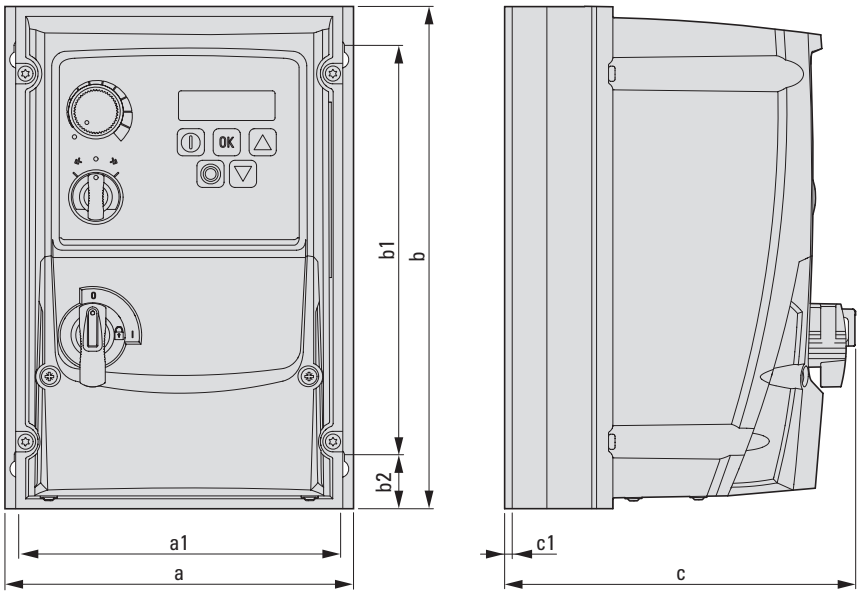

Size	a	a1	b	b1	b2	c	c1	Ø1	Ø2	m
	mm	mm	mm	mm	mm	mm	mm	mm	mm	kg
FS1	161	148.5	232	189	25	162	3.5	4	8	2.5
FS2	188	176	257	200	28	182	3.5	4.2	8.5	3.5
FS3	211	197.5	310	252	33	238	3.5	4.2	8.5	7
FS4	240	226	360	300	33	275	3.5	4.2	8.5	9.5

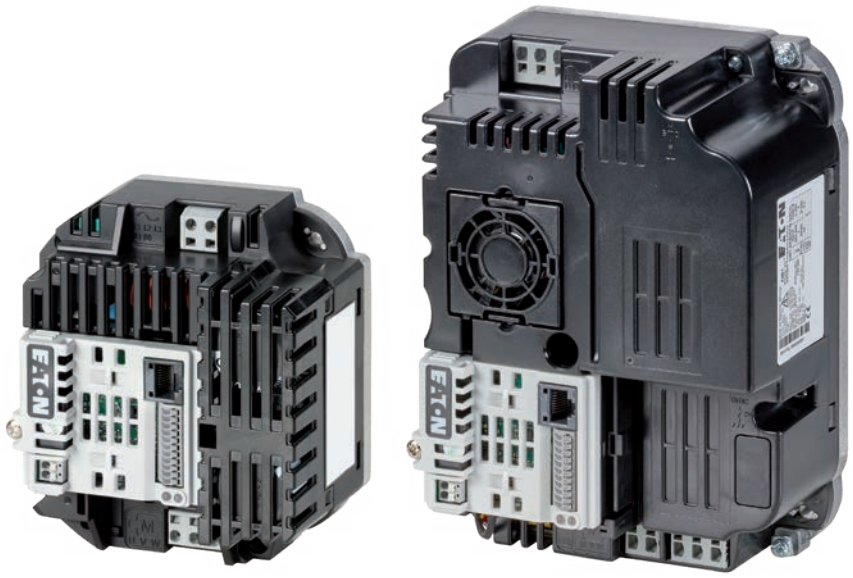

PowerXL variable frequency drives DB1 Cold Plate Drive

PowerXL DB1 variable frequency drives combine all the functionalities from the tried-and-true DC1 series in the smallest possible IEC-compatible format. In addition, cold plate technology makes these powerful devices the ideal solution for customers who need to integrate a variable frequency drive into existing systems without enough space for heat sinks or ventilation.

Performance range:

- 0.55 kW (U_e: 1~ 115 V, U_2: 3~ 230 V)
- 0.75 kW (U_e: 1~ 115-230 V, U_2: 3~ 230 V)
- 0.37 - 0.75 kW (U_e: 1~ 230 V, U_2: 3~ 230 V)
- 0.37 - 1.5 kW (U_e: 3~ 230 V, U_2: 3~ 230 V)
- 0.75 - 4 kW (U_e: 3~ 400 V, U_2: 3~ 400 V)

Applications:

- Pumps with integrated variable frequency drive
- Fans with integrated variable frequency drive
- Air Handling Units
- Compressors
- Mobile conveyor belts

Features:

- Fast commissioning with 14 basic parameters
- Large overload capability: 150% for 60 seconds, 175% for 2 seconds
- Ambient air temperature up to 60°C without derating
- Sensorless vector control
- Can be used to drive high-efficiency IE4 motors
- Short-circuit proof in all operating modes
- Integrated CANopen and Modbus RTU
- IP20 degree of protection
- Integrated EMC filter
- Power Factor Compensation (PFC)
- Integrated Brake Transistor
- Integrated PI controller
- U/f control
- Voltage boost
- DC braking
- Control signal terminals with push-in technology
- International standards (CE, UL, cUL, EAC; RoHS)

Accessory:

- External keypad
- Parameter storage unit and Bluetooth communication stick
- Mains chokes
- Motor chokes
- Sine filter
- Braking resistances
- drivesConnect parameter configuration software
- drivesConnect mobile App (iOS, Android)

For more information, visit:
www.Eaton.com/DB1



2.3 Variable frequency drive DB1 up to 4 kW

System overview 108
Key to type references 109
Sizes and degree of protection 109
Ordering 110
DB1, for three-phase motors 230 V/400 V, IP20 110
Accessories 111
Engineering 112
Block diagram 112
Assigned switching and protective elements for DB1 114
Technical data 116
General rated operational data 116
Specific rated operational data 119
Dimensions and weights 125

System overview

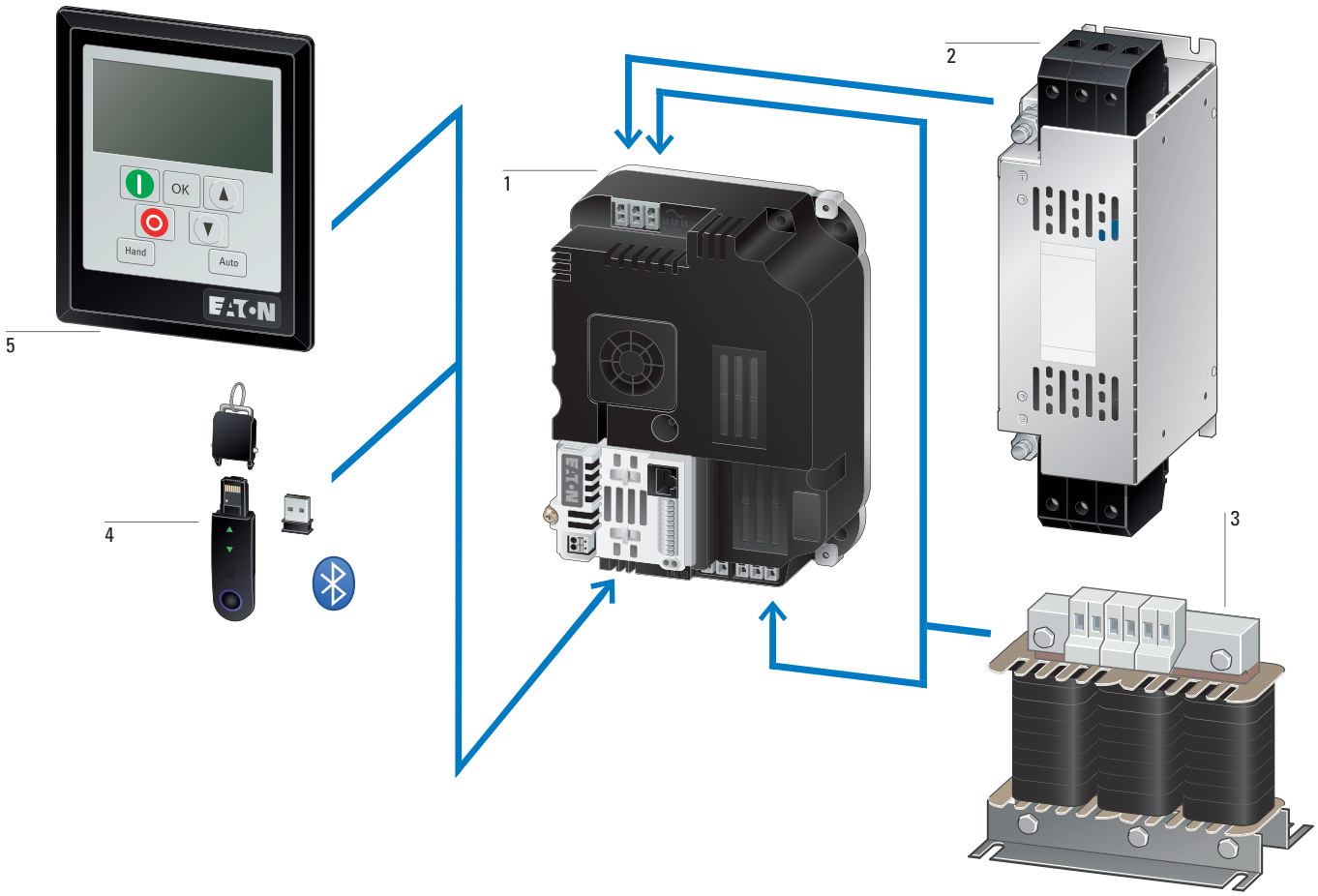

DB1 variable frequency drives 1
→ Page 110

External radio interference suppression filter 2
→ Page 217

Mains chokes, motor reactors 3
→ Page 215
→ Page 219

Memory and Bluetooth stick 4
→ Page 111

External keypad 5
→ Page 111

Key to type references

DB1 - 1 2 2D3 F N - N - 2 C C - PFC

Device series	Connection in power section	Mains voltage category	Rated operational current (examples)	EMC (radio interference suppression filter)
DB1 = variable frequency drive, basic, series 1 (D = Drives, B = Basic, 1 = Series)	1 = Single-phase mains connection / three-phase motor connection 3 = Three-phase mains connection / three-phase motor connection	D = 115 V (Net) → 230 V (Motor) (D = Doubler) M = 115 V / 230 V (110 +10% - 230 -20%) V 1 = 115 V (110 -10% - 115 +10%) V 2 = 230 V (200 -10% - 240 +10%) V 4 = 400 V (380 -10% - 480 +10%) V	2D3 = 2.3 A 4D1 = 4.1 A	N = No internal RFI filter F = Internal RFI filter

Variant	Version	Design	Protection type	Display unit (display)	Brake chopper
PFC = Power factor correction	C = Additional PCB protection (coated board)	C = Coldplate (without heat sink)	2 = IP20 / NEMA 0	N = No LED display	N = No internal brake chopper B = Brake chopper

Sizes and degree of protection

Protection type	Frame size			
	FS1	FS1B	FS1C	FS2
IP20/NEMA 0	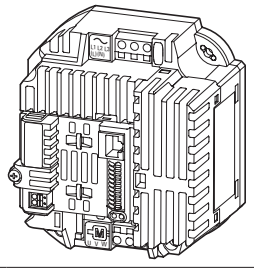	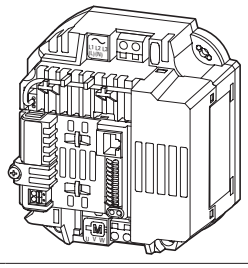	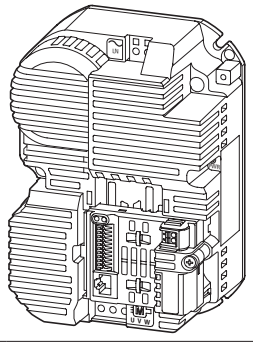	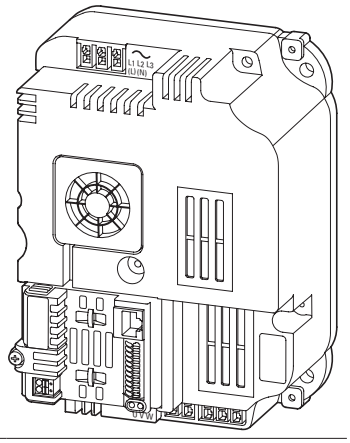

2.3 Variable frequency drive DB1 up to 4 kW

DB1, for three-phase motors 230 V/400 V, IP20

Ordering

Rated operational current [1) 4)]	Assigned motor output [1) 2) 3)]		Configuration			Frame size	Protection type	**Catalog Number** Article no.	Std. pack
			Radio interference suppression filter	Brake chopper	7-segment display				
I_e A	P kW	P HP							
PowerXL variable frequency drives DB1									
The mains voltage of 115 V is raised to 230 V (output voltage) through an internal voltage double connection. U_e 115 V AC, single-phase / U_2 230 V AC, three-phase Mains voltage (50/60Hz) U_{LN} 110 (-10%) - 115 (+10%) V									
3.2	0.55	0.75	✓	–	–	FS1B	IP20/NEMA 0	**DB1-1D3D2FN-N2CC** 199347	1 unit
U_e 115 - 230 V AC, single-phase / U_2 230 V AC, three-phase Mains voltage (50/60Hz) U_{LN} 200 (-10%) - 240 (+10%) V									
4.3	0.75	1	✓	–	–	FS1C	IP20/NEMA 0	**DB1-1M4D3FN-N2CC-PFC** 199738	1 unit
U_e 230 V AC, single-phase / U_2 230 V AC, three-phase Mains voltage (50/60Hz) U_{LN} 200 (-10%) - 240 (+10%) V									
2.3	0.37	0.5	✓	–	–	FS1	IP20/NEMA 0	**DB1-122D3FN-N2CC** 197193	1 unit
4.3	0.75	1	✓	–	–	FS1	IP20/NEMA 0	**DB1-124D3FN-N2CC** 197194	
7	1.5	2	✓	–	–	FS1C	IP20/NEMA 0	**DB1-127D0FN-N2CC-PFC** 199739	
U_e 230 V AC, three-phase / U_2 230 V AC, three-phase Mains voltage (50/60Hz) U_{LN} 200 (-10%) - 240 (+10%) V									
2.3	0.37	0.5	✓	–	–	FS1	IP20/NEMA 0	**DB1-322D3FN-N2CC** 199735	1 unit
4.3	0.75	1	✓	–	–	FS1	IP20/NEMA 0	**DB1-324D3FN-N2CC** 199736	
7	1.5	2	✓	–	–	FS1B	IP20/NEMA 0	**DB1-327D0FN-N2CC** 199737	
U_e 400 V AC, three-phase / U_2 400 V AC, three-phase Mains voltage (50/60Hz) U_{LN} 380 (-10%) - 480 (+10%) V									
2.2	0.75	1	✓	–	–	FS1	IP20/NEMA 0	**DB1-342D2FN-N2CC** 197196	1 unit
4.1	1.5	2	✓	–	–	FS1	IP20/NEMA 0	**DB1-344D1FN-N2CC** 197197	
5.8	2.2	3	✓	✓	–	FS2	IP20/NEMA 0	**DB1-345D8FB-N2CC** 197565	
9.5	4	5	✓	✓	–	FS2	IP20/NEMA 0	**DB1-349D5FB-N2CC** 197566	

Notes

1) Overload cycle: 150% for 60 s every 600 s
2) At 230 V, 50 Hz/at 220 - 240 V, 60 Hz
   At 400 V, 50 Hz/at 440 - 480 V, 60 Hz
3) For normal internally and externally ventilated four-pole three-phase asynchronous motors with 1500 rpm at 50 Hz and 1800 rpm at 60 Hz
4) Rated operational current at a switching frequency of 16 kHz and an ambient air temperature of +60°C

	Descriptions	Length m	For use with	Catalog Number Article no.	Std. pack
	**External keypad**				
	With 7-digital display assembly Front IP54 With approx. 3 m-long, plug-in connection cable (RJ45, 8-pin)	3	DE1, DE11, DC1, DB1, DA1	**DX-KEY-LED2** 186946	1 unit
	With multi-language plain text OLED display Front IP54 With approx. 3 m-long, plug-in connection cable (RJ45, 8-pin)	3	DC1, DB1, DA1, RAM05, RASP5	**DX-KEY-OLED** 169133	
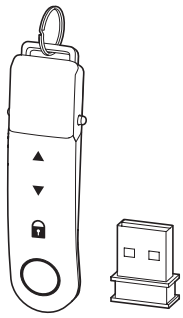	**Parameter assignment** Parameter storage unit and Bluetooth communication stick				
	For storage, copying parameters, and/or transferring parameters to a PC or smartphone (iOS or Android) via Bluetooth with the drivesConnect software or the drivesConnect mobile app respectively With 2 function keys for uploading and downloading parameters with parameter memory.	–	DE1, DE11, DC1, DB1, DA1, RAM05, RASP5	**DX-COM-STICK3-KIT** 197586	1 unit
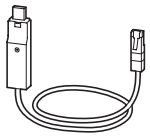	**Programming cable**				
	Interface converter USB/RS485 with connection cable, RJ45 8 pole For storage, copying parameters, and/or transferring parameters to a PC with the drivesConnect software, electrically isolated	3	DE1, DE11, DC1, DB1, DA1	**DX-CBL-PC-3M0** 744-A3036-00P	1 unit
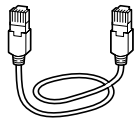	**Connection cable**				
	Patch cord with RJ45 plugs, 8 pole	0.5	DE1, DE11, DC1, DB1, DA1	**DX-CBL-RJ45-0M5** 169137	1 unit
		1		**DX-CBL-RJ45-1M0** 169138	
		3		**DX-CBL-RJ45-3M0** 169139	
	**Bus terminating resistor**				
	RJ45 8 pole Connection to CANopen® (pin 1/2, 124 Ω) or to Modbus RTU (pin 7/8, 120 Ω)	–	DX-SPL-RJ45-2SL-1PL	**EASY-NT-R** 256281	2 unit
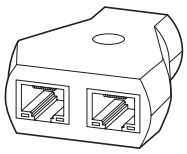	**Splitter**				
	RJ45, 8-pin, 3 sockets	–	DX-CBL-RJ45…	**DX-SPL-RJ45-3SL** 169141	1 unit
	RJ45, 8-pin, 2 sockets/1 plug	–	DE1, DE11, DC1, DB1, DA1	**DX-SPL-RJ45-2SL1PL** 169142	

2.3 Variable frequency drive DB1 up to 4 kW

Block flow diagram

Engineering

DB1-12…

Mains voltage U_{LN}: single-phase, 200 (-10%) - 240 (+10%) V, 50/60 Hz

Motor voltage U_2: three-phase, $U_2 = U_{LN}$, 0 - 50/60 Hz (max. 500 Hz)

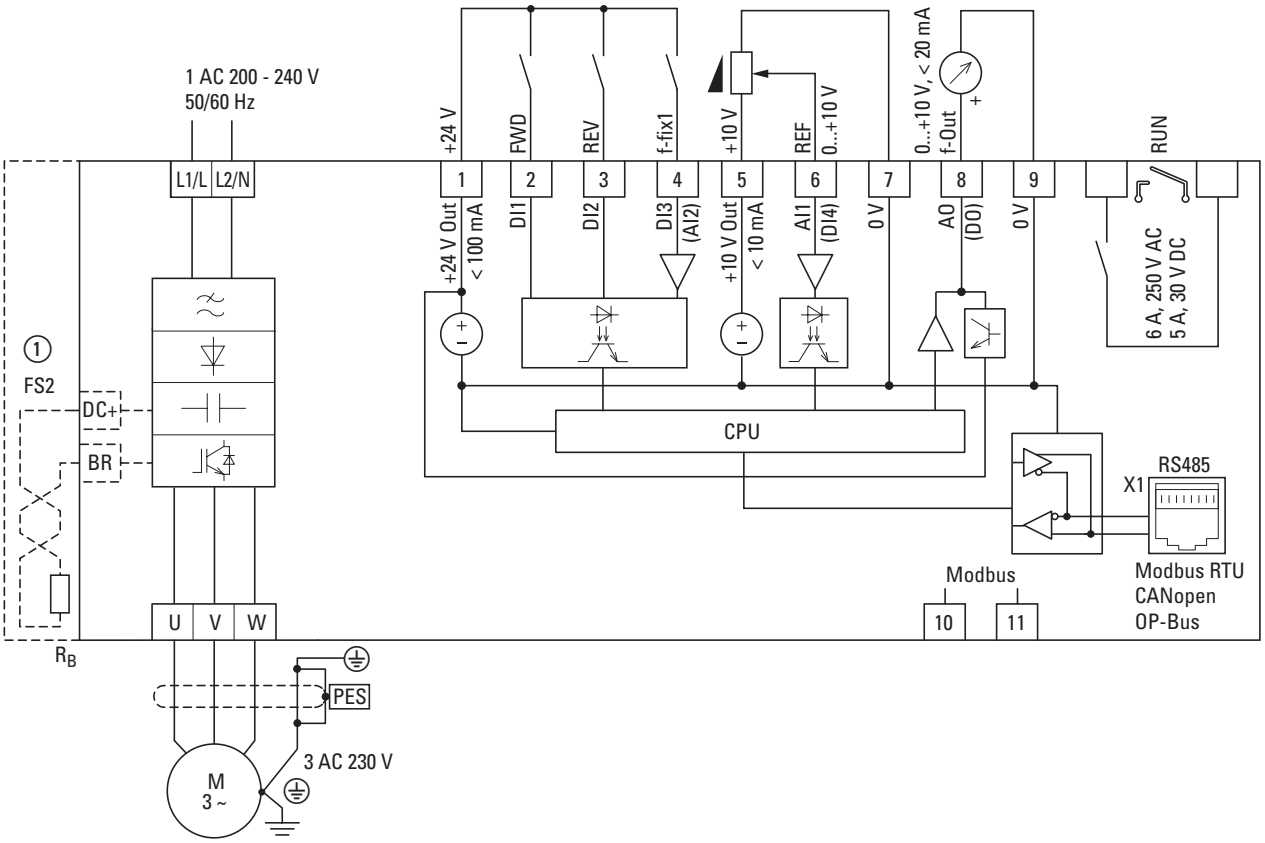

① FS2-size devices make it possible to connect braking resistors (DC+, BR).

Variable frequency drive with single-phase supply system voltage and three-phase motor connection

DB1-34…

Mains voltage U_{LN}: three-phase, 380 (-10%) - 480 (+10%) V, 50/60 Hz

Motor voltage U_2: three-phase, $U_2 = U_{LN}$, 0 - 50/60 Hz (max. 500 Hz)

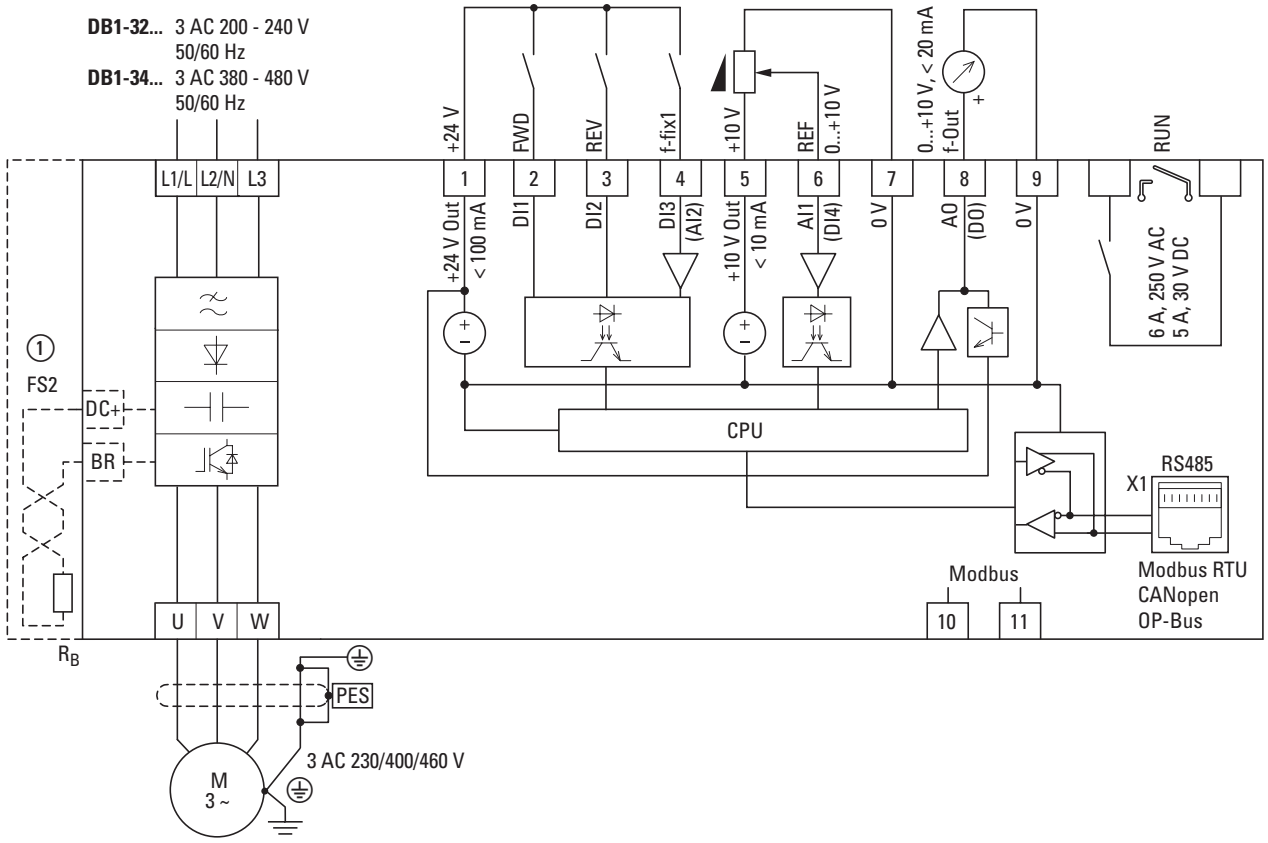

① FS2-size devices make it possible to connect braking resistors (DC+, BR).

Variable frequency drive with three-phase mains supply voltage and three-phase motor connection

2.3 Variable frequency drive DB1 up to 4 kW

Assigned switching and protective elements for DB1

Catalog Number	Motor	Variable frequency drives		Mains connection	
	Assigned motor output [1) 2)]	Rated operational current [1)]	Input current	Protective device	
	I_H = 150%	I_H = 150%	I_H = 150%	IEC (Type B, gG), 150%	UL (Class CC or J) [3)]
	P	I_e	I_{LN}		
	kW	A	A	A	A
Variable frequency drive DB1 up to 4 kW					
DB1-122D3FN-N2CC	0.37	2.3	4.5	10	10
DB1-124D3FN-N2CC	0.75	4.3	9.1	16	15
DB1-127D0FN-N2CC-PFC	0.75	7	8.7	16	15
DB1-1D3D2FN-N2CC	0.5	3.2	11.4	16	15
DB1-1M4D3FN-N2CC-PFC (at 110 V)	0.75	4.3	10.9	16	15
DB1-1M4D3FN-N2CC-PFC (at 230 V)	0.75	4.3	5.1	10	10
DB1-322D3FN-N2CC	0.37	2.3	2.2	10	10
DB1-324D3FN-N2CC	0.75	4.3	4.4	10	10
DB1-327D0FN-N2CC	1.5	7	9.6	16	15
DB1-342D2FN-N2CC	0.75	2.2	2.3	6	6
DB1-344D1FN-N2CC	1.5	4.1	5.6	10	10
DB1-345D8FB-N2CC	2.2	5.8	7.5	10	10
DB1-349D5FB-N2CC	4	9.5	10.7	16	15

Notes

[1)] Overload cycle for 60 s every 600 s
[2)] For normal internally and externally ventilated four-pole three-phase asynchronous motors with 1500 rpm at 50 Hz and 1800 rpm at 60 Hz
[3)] Maximum short-circuit current of the supply network: 100 kA rms
[4)] Optional external radio interference suppression filter for longer motor cable lengths and for use in different EMC environments

Mains connection					**Motor feeder**
Mains contactor	Mains choke		Radio interference suppression filter (external, 150%) [4]		Motor choke
I_H = 150% (CT/IH, at 50°C)	I_H = 150% (at 50°C)				I_H = 150% (CT/I_H, at 50°C)
	Type (max. 50°C)	Type (max. 40°C)	Low leakage current	Standard	
DILEM-…+P1DILEM	DX-LN1-006	DX-LN1-006	DX-EMC12-008-SL	DX-EMC12-014-FS1	DX-LM3-008
DILEM-…+P1DILEM	DX-LN1-013	DX-LN1-013	DX-EMC12-012-SL	DX-EMC12-014-FS1	DX-LM3-008
DILEM-…+P1DILEM	DX-LN1-013	DX-LN1-009	DX-EMC12-012-SL	DX-EMC12-014-FS1	DX-LM3-008
DILEM-…+P1DILEM	DX-LN1-013	DX-LN3-016	DX-EMC12-012-SL	DX-EMC12-014-FS1	DX-LM3-008
DILEM-…+P1DILEM	DX-LN1-013	DX-LN1-013	DX-EMC12-012-SL	DX-EMC12-014-FS1	DX-LM3-008
DILEM-…+P1DILEM	DX-LN1-006	DX-LN1-006	DX-EMC12-012-SL	DX-EMC12-014-FS1	DX-LM3-008
DILEM-…	DX-LN3-004	DX-LN3-004	DX-EMC34-008-SL	DX-EMC34-008	DX-LM3-008
DILEM-…	DX-LN3-006	DX-LN3-006	DX-EMC34-008-SL	DX-EMC34-008	DX-LM3-008
DILEM-…	DX-LN3-016	DX-LN3-010	DX-EMC34-012-SL	DX-EMC34-016	DX-LM3-008
DILEM-…	DX-LN3-004	DX-LN3-004	DX-EMC34-008-SL	DX-EMC34-008	DX-LM3-008
DILEM-…	DX-LN3-006	DX-LN3-006	DX-EMC34-008-SL	DX-EMC34-008	DX-LM3-008
DILEM-…	DX-LN3-010	DX-LN3-010	DX-EMC34-012-SL	DX-EMC34-016	DX-LM3-008
DILEM-…	DX-LN3-016	DX-LN3-016	DX-EMC34-012-SL	DX-EMC34-016	DX-LM3-011

Technical specifications

	Symbol	Unit	Value
General			
Standards			General requirements: EN 61800-2 EMV: EN 61800-3: Safety: EN 61800-5-1
Certifications and manufacturer's declarations on conformity			CE, UL, cUL
Production quality			RoHS, ISO 9001
Climatic proofing	ρw	%	< 95%, average relative humidity (RH), non-condensing, non-corrosive, no dripping water (EN 61800-2)
Ambient temperature			
Operation	ϑ	°C	-10 - +60 – depending on the cooling system
Storage	ϑ	°C	-40 - +60 (frost-free and condensation-free)
Vibration level (not evaluated during operation)			
Shock test			
Pulse shape			Half sinus
Top acceleration			15 g
Time Window			11 ms
Vibration test			
Frequency range	f	Hz	10 - 150 10 - 57.55: 0.075 mm peak-peak 57.55 - 150: 1 g Top acceleration
Vibration evaluation			1 octave/minute
Electrostatic discharge (ESD, EN 61000-4-2:2009	U	kV	±4, contact discharge ±8, air discharge
Fast transient burst (EFT/B, EN 61000-4-4: 2004)	U	kV	±1, at 5 kHz, control signal terminal ±2, at 5 kHz, motor connection terminals, single-phase mains connection terminals ±2, at 5 kHz, three-phase mains connection terminals
Overvoltage (surge, EN 61000-4-5: 2006)			
115 V			±1, phase to phase/neutral conductor ±2, phase/neutral conductor to earth
(200 - 240) V			±1, phase to phase/neutral conductor ±2, phase/neutral conductor to earth
(380 - 480) V			±2, phase to phase ±2, phase to earth ±4, Fail Safe
Electric strength (flash, EN 61800-5-1: 2007)			
(110 - 115) V	U	kV	1.5
(200 - 240) V	U	kV	1.5
(380 - 480) V	U	kV	2.5
Radio interference class (EMC)			
Maximum screened motor cable length with integrated radio interference suppression filter			
Category C1 (conducted)	l	m	1
Category C2	l	m	3
Category C3	l	m	10
Mounting position			Any – depends on the cooling system
Altitude	h	m	0 - 1000 above sea level, > 1000 with 1% load current reduction every 100 m, max. 2000
Protection type			IP20 (NEMA 0)
Protection against contact			BGV A3 (VBG4, finger- and back-of-hand proof)

	Symbol	Unit	Value
Main circuit / power section			
Feeder			
Rated operating voltage			
DB1-12…	U_e	V	1~ 230 (200 V (-10%) - 240 V (+10%))
DB1-1D…	U_e	V	1~ 110 (110 V (-10%) - 115 V (+10%)) → U_2 = 230 V
DB1-1M…	U_e	V	1~ 110 - 230 (110 V (-20%) - 230 V (+10%)) → U_2 = 230 V
DB1-32…	U_e	V	3~ 230 (200 V (-10%) - 240 V (+10%))
DB1-34…	U_e	V	3~ 400 (380 V (-10%) - 480 V (+10%))
Mains frequency	f	Hz	48 - 62
Phase Imbalance		%	max. 3
Maximum short-circuit current (supply voltage)	SCCR	kA	100
Mains switch-on frequency			Maximum of one time every 30 seconds
Mains network configuration (AC supply system)			TN and TT network with directly earthed neutral point.
Inrush current	I	A	< I_{LN}
Motor feeder			
Output voltage	U_2	V	3~ 0 - U_e
Assigned motor output			
at 115 V, 50 Hz	P	kW	0.5
at 230 V, 50 Hz	P	kW	0.37 - 1.5
at 400 V, 50 Hz	P	kW	0.75 - 4
Output Frequency			
Range, parameterizable	f_2	Hz	0 - 5 x Rated motor frequency (P-09), max. 500 Hz
Resolution		Hz	0.1
Rated Current	I_e	A	2.2 - 9.5
Overload current for 60 s every 600 s	I_L	%	150
Overload current for 3.75 s every 600 s	I_L	%	175
Switching frequency (double modulation)	f_{PWM}	kHz	max. 32
Operating mode			
V/Hz control (speed accuracy)			±20%, with slip compensation
Vector control (static speed accuracy)			±1% load range: 0 - 100%
Torque response time	t_r	ms	1 - 8
Torque linearity			±5% (10 - 90% of speed variable range, 20 - 100% of torque load range)
Response time (enable IGBT)	t_r	ms	< 10
DC-braking			
Time before start	t	s	0 - 25, in the event of a stop
Motor pick-up control function (for catching spinning motors)			all frame sizes

2.3 Variable frequency drive DB1 up to 4 kW

General rating data

	Symbol	Unit	Value
Control section			
Control voltage			
Output voltage (control signal terminal 1)	U_C	V DC	24
Load rating (control signal terminal 1)	I_1	mA	100
Reference voltage (control signal terminal 5)	U_S	V DC	10
Load rating (control signal terminal 5)	I_5	mA	10
Digital Input (DI)			
Qty.			2 - 4
Logic (level)			increase (NPN)
Time of reaction	t_r	ms	< 8
Input voltage range High (1)	U_C	V DC	8 - 30
Input voltage range Low (0)	U_C	V DC	0 - 4
Analog Input (AI)			
Qty.			0 - 2
Resolution			12 bits
Accuracy		%	< 1 to the final value
Time of reaction	t_r	ms	< 16
Input voltage range	U_S	V	0 - 10, DC (R_i > 100 kΩ)
Input current range	I_S	mA	0/4 - 20 (R_B ~ 500 Ω)
Relay output (RO1)			
Qty.			1 relays
Relay contact			Make
Switching capacity			
AC	I	A	6 (250 V AC)
DC	I	A	5 (30 V AC)
Digital Output (DO)			
Qty.			0 - 1
Output voltage	U_{Out}	V	+24
Load rating (control signal terminal 8)	I_8	mA	20 max.
Analog Output (AO)			
Qty.			0 - 1
Output voltage (control signal terminal 8)	U_{Out}	V	0 - 10
Output current (control signal terminal 8)	I_8	mA	0 - 20, 4 - 20
Load rating (control signal terminal 8)	I_8	mA	20 max.
Resolution		Bit	10
Accuracy		%	< 1 to the final value
Interface (RJ45)			OP bus, Modbus RTU, CANopen, RS485
Response time (after valid command)	t_r	ms	< 8 (Modbus, CANopen) < 8 (OP bus: Master slave, 60 ms cycle)

Size	Symbol	Unit	3D2
DB1-1D… device series			
Rated operational current	I_e	A	3.2
Overload current for 60 s every 600 s	I_L	A	4.8
Overload current for 3.75 s every 600 s	I_L	A	5.6
Apparent power at rated operation 230 V	S	kVA	0.74
Apparent power at rated operation 240 V	S	kVA	0.77
Assigned motor power			
at 230 V, 50 Hz	P	kW	0.5
at (220 - 240) V, 60 Hz	P	HP	0.75
Power side (primary side):			
Number of phases			single-phase or two-phase
Device Voltage Rating	U_{LN}	V	110 (-10%) - 115 (+10%), 48 - 62 Hz 99 - 126 ±0%
Input current (phase current)	I_{LN}	A	11.4
Switching frequency (pulse frequency)			
Default settings	f_{PWM}	kHz	8
Setting range	f_{PWM}	kHz	4 - 32
Maximum leakage current to earth (PE), at U_{LN}: 240 V, without motor	I_{Touch}	mA	
ITouch			< 3.5
Heat dissipation (% nN / % MN)			
90 / 100 @ 4 kHz	PV	W	33
90 / 100 @ 8 kHz	PV	W	36
90 / 100 @ 12 kHz	PV	W	23
90 / 100 @ 16 kHz	PV	W	24
90 / 100 @ 24 kHz	PV	W	35
90 / 100 @ 32 kHz	PV	W	42
90 / 50 @ 8 kHz	PV	W	34
50 / 100 @ 8 kHz	PV	W	37
50 / 50 @ 8 kHz	PV	W	25
50 / 25 @ 8 kHz	PV	W	20
0 / 100 @ 8 kHz	PV	W	52
0 / 50 @ 8 kHz	PV	W	17
0 / 25 @ 8 kHz	PV	W	16
Standby, (device not enabled)	PV	W	5
Frame size	–	–	FS1B

Note N/A = no entry

2.3 Variable frequency drive DB1 up to 4 kW

Specific rated operational data

Size	Symbol	Unit	4D3
DB1-1M… device series			
Rated operational current	I_e	A	4.3
Overload current for 60 s every 600 s	I_L	A	6.5
Overload current for 3.75 s every 600 s	I_L	A	7.5
Apparent power at rated operation 230 V	S	kVA	0.99
Apparent power at rated operation 240 V	S	kVA	1
Assigned motor power			
at 230 V, 50 Hz	P	kW	0.75
at (220 - 240) V, 60 Hz	P	HP	1
Power side (primary side):			
Number of phases			single-phase or two-phase
Device Voltage Rating	U_{LN}	V	110 (-20%) - 230 (+10%), 48 - 62 Hz 88 - 253 ±0%
Input current (phase current)	I_{LN}	A	110 V: 10.92 230 V: 5.1
Switching frequency (pulse frequency)			
Default settings	f_{PWM}	kHz	8
Setting range	f_{PWM}	kHz	4 - 32
Maximum leakage current to earth (PE), at U_{LN}: 240 V, without motor	I_{Touch}	mA	
ITouch			< 3.5
Heat dissipation (% nN / % MN)			
90 / 100 @ 4 kHz	PV	W	N/A
90 / 100 @ 8 kHz	PV	W	N/A
90 / 100 @ 12 kHz	PV	W	N/A
90 / 100 @ 16 kHz	PV	W	N/A
90 / 100 @ 24 kHz	PV	W	N/A
90 / 100 @ 32 kHz	PV	W	N/A
90 / 50 @ 8 kHz	PV	W	N/A
50 / 100 @ 8 kHz	PV	W	N/A
50 / 50 @ 8 kHz	PV	W	N/A
50 / 25 @ 8 kHz	PV	W	N/A
0 / 100 @ 8 kHz	PV	W	N/A
0 / 50 @ 8 kHz	PV	W	N/A
0 / 25 @ 8 kHz	PV	W	N/A
Standby, (device not enabled)	PV	W	6.5
Frame size	–	–	FS1C

Note N/A = no entry

Size	Symbol	Unit	7D0
DB1-12…-PFC device series			
Rated operational current	I_e	A	7
Overload current for 60 s every 600 s	I_L	A	10.5
Overload current for 3.75 s every 600 s	I_L	A	12.25
Apparent power at rated operation 230 V	S	kVA	1.6
Apparent power at rated operation 240 V	S	kVA	1.7
Assigned motor power			
at 230 V, 50 Hz	P	kW	1.5
at (220 - 240) V, 60 Hz	P	HP	2
Power side (primary side):			
Number of phases			single-phase or two-phase
Device Voltage Rating	U_{LN}	V	200 (-10%) - 240 (+10%), 50/60 Hz 180 - 264 ±0%, 48 - 62 Hz ±0%
Input current (phase current)	I_{LN}	A	8.7
Switching frequency (pulse frequency)			
Default settings	f_{PWM}	kHz	8
Setting range	f_{PWM}	kHz	4 - 32
Maximum leakage current to earth (PE), at U_{LN}: 240 V, without motor	I_{Touch}	mA	
ITouch			< 3.5
Heat dissipation (% nN / % MN)			
90 / 100 @ 4 kHz	PV	W	N/A
90 / 100 @ 8 kHz	PV	W	105
90 / 100 @ 12 kHz	PV	W	N/A
90 / 100 @ 16 kHz	PV	W	N/A
90 / 100 @ 24 kHz	PV	W	N/A
90 / 100 @ 32 kHz	PV	W	N/A
90 / 50 @ 8 kHz	PV	W	63
50 / 100 @ 8 kHz	PV	W	80
50 / 50 @ 8 kHz	PV	W	52
50 / 25 @ 8 kHz	PV	W	33
0 / 100 @ 8 kHz	PV	W	N/A
0 / 50 @ 8 kHz	PV	W	41
0 / 25 @ 8 kHz	PV	W	33
Standby, (device not enabled)	PV	W	N/A
Frame size	–	–	FS1C

Note N/A = no entry

2.3 Variable frequency drive DB1 up to 4 kW

Specific rated operational data

Size	Symbol	Unit	2D3	4D3
DB1-12… device series				
Rated operational current	I_e	A	2.3	4.3
Overload current for 60 s every 600 s	I_L	A	3.45	6.45
Overload current for 3.75 s every 600 s	I_L	A	4.03	7.53
Apparent power at rated operation 230 V	S	kVA	0.53	0.99
Apparent power at rated operation 240 V	S	kVA	0.55	1.03
Assigned motor power				
at 230 V, 50 Hz	P	kW	0.37	0.75
at (220 - 240) V, 60 Hz	P	HP	0.5	1
Power side (primary side):				
Number of phases			single-phase or two-phase	
Device Voltage Rating	U_{LN}	V	200 (-10%) - 240 (+10%), 50/60 Hz 180 - 264 ±0%, 48 - 62 Hz ±0%	
Input current (phase current)	I_{LN}	A	4.5	9.1
Switching frequency (pulse frequency)				
Default settings	f_{PWM}	kHz	8	8
Setting range	f_{PWM}	kHz	4 - 32	4 - 32
Maximum leakage current to earth (PE), at U_{LN}: 240 V, without motor	I_{Touch}	mA	< 3.5	< 3.5
Heat dissipation (% nN / % MN)				
90 / 100 @ 4 kHz	PV	W	N/A	57
90 / 100 @ 8 kHz	PV	W	34	60
90 / 100 @ 12 kHz	PV	W	N/A	47
90 / 100 @ 16 kHz	PV	W	N/A	59
90 / 100 @ 24 kHz	PV	W	N/A	59
90 / 100 @ 32 kHz	PV	W	N/A	60
90 / 50 @ 8 kHz	PV	W	29	32
50 / 100 @ 8 kHz	PV	W	28	41
50 / 50 @ 8 kHz	PV	W	25	23
50 / 25 @ 8 kHz	PV	W	23	18
0 / 100 @ 8 kHz	PV	W	23	27
0 / 50 @ 8 kHz	PV	W	22	18
0 / 25 @ 8 kHz	PV	W	21	13
Standby, (device not enabled)	PV	W	4.3	4.3
Frame size	–	–	FS1	FS1

Note N/A = no entry

Size	Symbol	Unit	2D3	4D3	7D0
DB1-32… device series					
Rated operational current	I_e	A	2.3	4.3	7
Overload current for 60 s every 600 s	I_L	A	3.45	6.45	10.5
Overload current for 3.75 s every 600 s	I_L	A	4	7.5	12.3
Apparent power at rated operation 230 V	S	kVA	0.53	0.99	1.6
Apparent power at rated operation 240 V	S	kVA	0.55	1	1.7
Assigned motor power					
at 230 V, 50 Hz	P	kW	0.37	0.75	1.5
at (220 - 240) V, 60 Hz	P	HP	0.5	1	2
Power side (primary side):					
Number of phases			single-phase or two-phase		
Device Voltage Rating	U_{LN}	V	200 (-10%) - 240 (+10%), 50/60 Hz 180 - 264 ±0%, 48 - 62 Hz ±0%		
Input current (phase current)	I_{LN}	A	2.2	4.4	9.6
Switching frequency (pulse frequency)					
Default settings	f_{PWM}	kHz	8	8	8
Setting range	f_{PWM}	kHz	4 - 32	4 - 32	4 - 32
Maximum leakage current to earth (PE), at U_{LN}: 240 V, without motor	I_{Touch}	mA			
ITouch			< 3.5	< 3.5	< 3.5
Heat dissipation (% nN/% MN)					
90 / 100 @ 4 kHz	PV	W	N/A	N/A	N/A
90 / 100 @ 8 kHz	PV	W	29	51	89
90 / 100 @ 12 kHz	PV	W	N/A	N/A	N/A
90 / 100 @ 16 kHz	PV	W	N/A	N/A	N/A
90 / 100 @ 24 kHz	PV	W	N/A	N/A	N/A
90 / 100 @ 32 kHz	PV	W	N/A	N/A	N/A
90 / 50 @ 8 kHz	PV	W	20	33	58
50 / 100 @ 8 kHz	PV	W	28	45	78
50 / 50 @ 8 kHz	PV	W	24	32	52
50 / 25 @ 8 kHz	PV	W	23	28	41
0 / 100 @ 8 kHz	PV	W	24	41	N/A
0 / 50 @ 8 kHz	PV	W	21	30	45
0 / 25 @ 8 kHz	PV	W	21	26	37
Standby, (device not enabled)	PV	W	4.2	4	4.9
Frame size	–	–	FS1	FS1	FS1B

Note N/A = no entry

2.3 Variable frequency drive DB1 up to 4 kW

Specific rated operational data

Size	Symbol	Unit	2D2	4D1	5D8	9D5
DB1-34… device series						
Rated operational current	I_e	A	2.2	4.1	5.8	9.5
Overload current for 60 s every 600 s	I_L	A	3.3	6.15	8.7	14.25
Overload current for 3.75 s every 600 s	I_L	A	3.85	7.18	10.15	16.63
Apparent power at rated operation 400 V	S	kVA	0.88	1.64	2.32	3.8
Apparent power at rated operation 480 V	S	kVA	1.06	1.97	2.78	4.56
Assigned motor power						
at 400 V, 50 Hz	P	kW	0.75	1.5	2.2	4
at 480 V, 60 Hz	P	HP	1	2	3	8
Power side (primary side):						
Number of phases			3	3	3	3
Device Voltage Rating	U_{LN}	V	380 (-10%) - 480 (+10%), 50/60 Hz 342 - 528 ±0%, (48 - 62) Hz ±0%			
Input current (phase current)	I_{LN}	A	2.3	5.6	7.5	10.7
Switching frequency (pulse frequency)						
Default settings	f_{PWM}	kHz	8	8	8	8
Setting range	f_{PWM}	kHz	4 - 32	4 - 32	4 - 32	4 - 32
Maximum leakage current (contact current) to earth (PE), at U_{LN}: 400 V, without motor	I_{Touch}	mA	< 3.5	< 3.5	< 3.5	< 3.5
Heat dissipation (% nN/% MN)						
90 / 100 @ 4 kHz	PV	W	N/A	46	75	128
90 / 100 @ 8 kHz	PV	W	N/A	53	82	148
90 / 100 @ 12 kHz	PV	W	N/A	63	99	169
90 / 100 @ 16 kHz	PV	W	N/A	59	115	191
90 / 100 @ 24 kHz	PV	W	N/A	69	143	244
90 / 100 @ 32 kHz	PV	W	N/A	80	–	–
90 / 50 @ 8 kHz	PV	W	N/A	36	62	94
50 / 100 @ 8 kHz	PV	W	N/A	50	72	126
50 / 50 @ 8 kHz	PV	W	N/A	35	55	84
50 / 25 @ 8 kHz	PV	W	N/A	29	45	67
0 / 100 @ 8 kHz	PV	W	N/A		62	108
0 / 50 @ 8 kHz	PV	W	N/A	30	54	75
0 / 25 @ 8 kHz	PV	W	N/A	27	40	61
Standby, (device not enabled)	PV	W	4.6	4.6	7.4	7.4
Frame size			FS1	FS1	FS2	FS2

Note N/A = no entry

Dimensions and weights

FS1

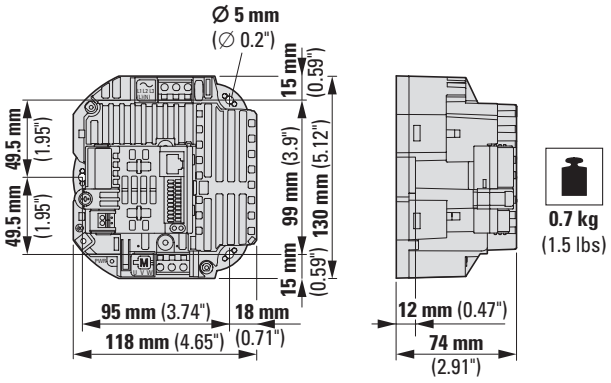

FS1B

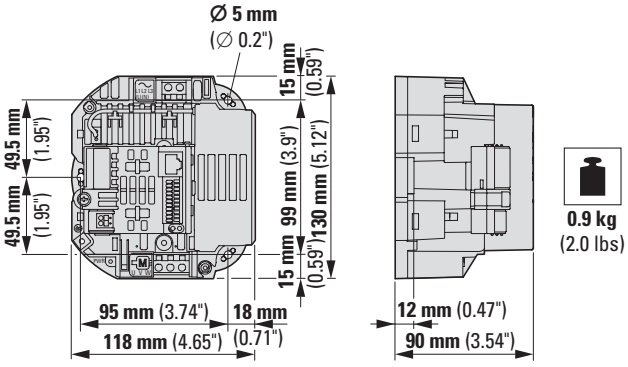

FS1C

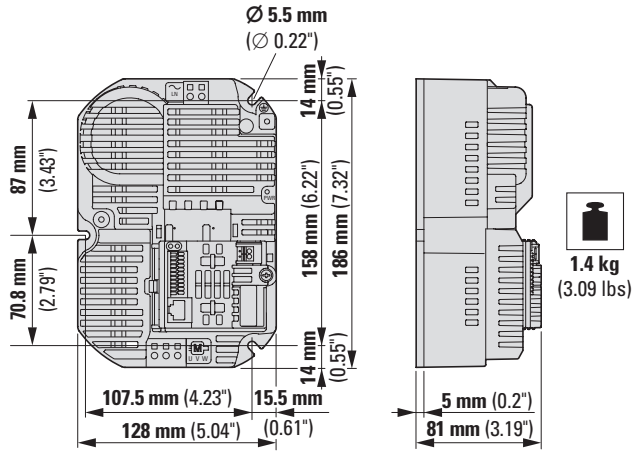

FS2

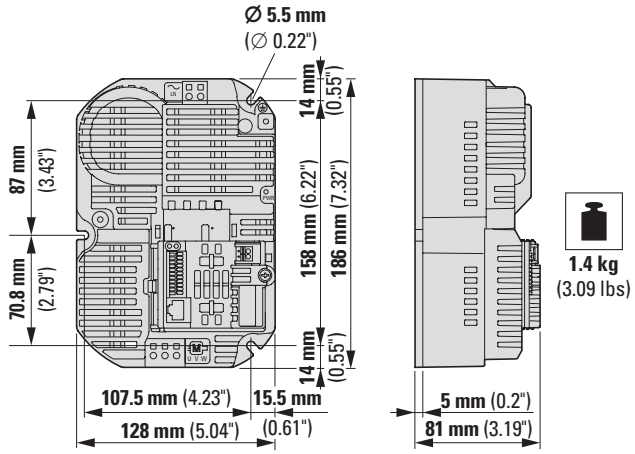



PowerXL variable frequency drives DA1 Advanced Machinery Drive

The PowerXL DA1 variable frequency drive, designed for the machine and system building industry, is characterized by its enormous flexibility in terms of communications protocols, a function block editor (PLC) that makes it possible to configure the drive as necessary for specific applications, and a powerful vector control mode for highly dynamic applications.

Performance range:

- 0.75 - 2.2 kW (U_e: 1~ 230 V, U_2: 3~ 230 V)
- 0.75 - 75 kW (U_e: 3~ 230 V, U_2: 3~ 230 V)
- 0.75 - 160 kW (U_e: 3~ 400 V, U_2: 3~ 400 V)
- 0.75 - 110 kW (U_e: 3~ 575 V, U_2: 3~ 575 V)

Applications:

- Winding machines
- Respooler machines
- Coating systems
- Compressors
- Mills, roller mills, shredders
- Extruders
- Cranes and lifting systems
- Marine
- Distributed applications (IP66)

Features:

- Large overload capability: 150% for 60 seconds, 200% for 4 seconds.
- Integrated Modbus RTU and CANopen
- Ambient air temperature up to 50°C without derating
- Integrated EMC filter
- Integrated Brake Transistor
- Degrees of protection IP20 and IP66
- Various I/O expansions
- V/F control, vector SL and CL, PM motor, BLDC motor, SynRel motor
- Optional field bus connections
- Integrated function block editor, optional
- Safe Torque Off (STO, SIL 2/Pl d)
- Optional high-resolution OLED display
- International standards (CE, UL, cUL, RCM, RoHS, EAC, UkrSEPRO, DNV (754–757))

Accessory:

- Communication modules (PROFIBUS, PROFINET, Ethernet/IP, EtherCAT, SmartWire-DT, DeviceNet…)
- I/O expansions
- Encoder module
- External keypad
- Mains chokes
- Motor chokes
- Sine filter
- Braking resistances
- External EMC filter
- Parameter storage unit and Bluetooth communication stick
- drivesConnect parameter configuration software
- drivesConnect mobile App (iOS, Android)

For more information, visit:
www.Eaton.com/DA1



2.4 Variable frequency drive DA1 to 160 kW

System overview 128
Key to type references 129
Sizes and degree of protection 130
Ordering 131
DA1 for three-phase motors 230 V, IP20/IP55 131
DA1 for three-phase motors 400 V, IP20/IP55 132
DA1 for three-phase motors 500 V, IP20/IP55 133
DA1 for three-phase motors 230 V, IP66 134
DA1 for three-phase motors 400 V/500 V, IP66 135
Accessories 137
Engineering 139
Block diagram 139
Assigned switching and protective elements 142
Technical data 146
General rated operational data 146
Specific rated operational data 149
Dimensions and weights 154

System overview

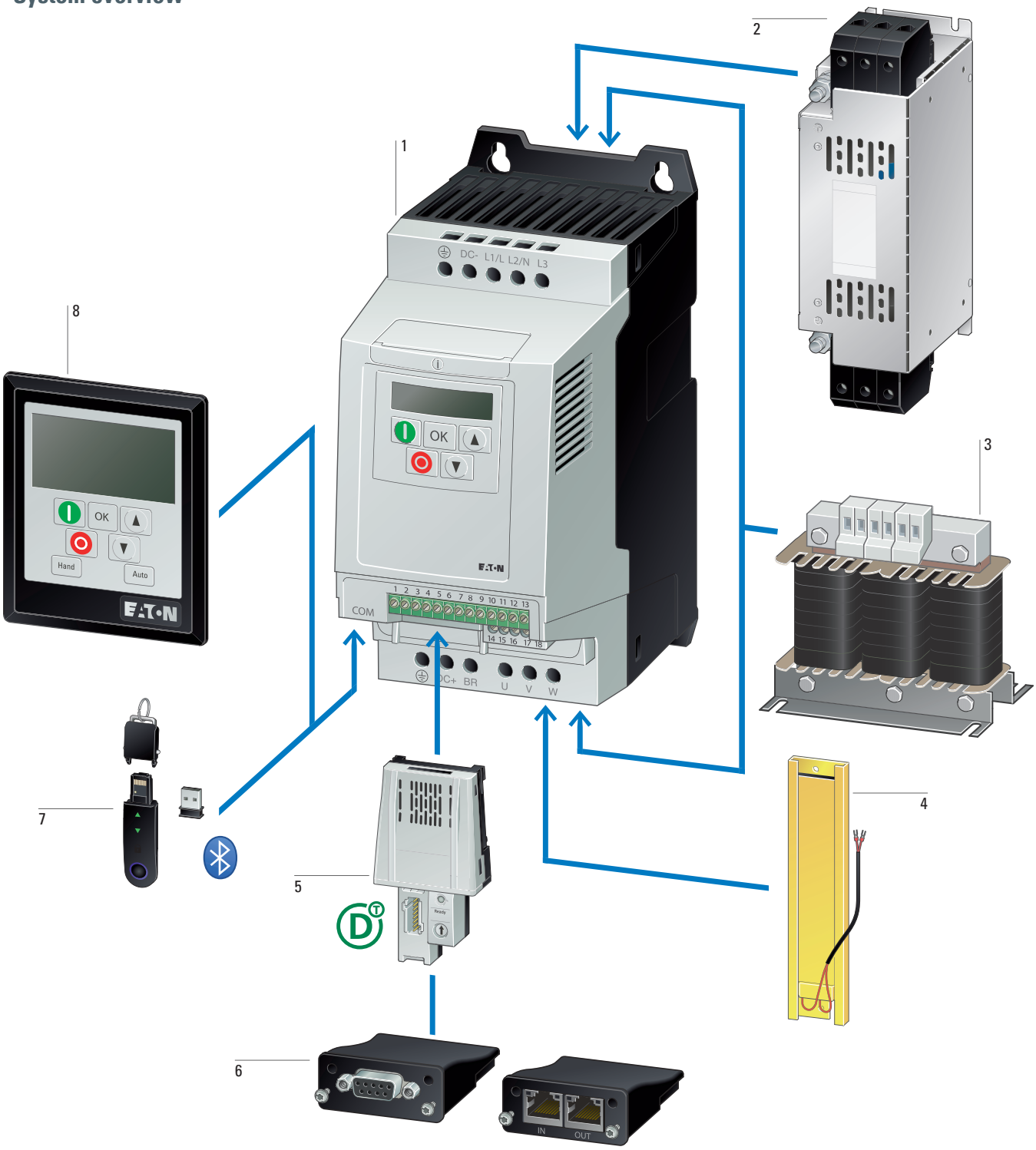

DA1 variable frequency drives 1
→ Page 131

Radio interference suppression filter 2
→ Page 217

Mains choke, motor choke, sine filter 3
→ Page 215
→ Page 219
→ Page 220

Braking resistance 4
→ Page 222

SmartWire-DT module 5
→ Page 137

Communication modules, expansion modules 6
→ Page 137

Memory and Bluetooth communication stick 7
→ Page 137

External keypad 8
→ Page 137

Key to type references

DA1 - 1 2 4D3 F B - A 20 C

Device series

DA1 = Variable frequency drive, advanced, Series 1
(D = Drives, A = Advanced, 1 = Series 1)

Connection in power section

1 = single-phase mains connection/
three-phase motor connection
3 = three-phase mains connection/
three-phase motor connection

Mains voltage category

2 = 230 V (200 - 240 V ±10%)
4 = 400 V (380 - 480 V ±10%)
5 = 575 V (500 - 600 V ±10%)

Rated operational current (examples)

4D3 = 4.3 A
024 = 24 A
240 = 240 A

Version

C = Additional PCB protection
(coated board)
O = UV-resistant (UL outdoor-rated),
additional PCB protection (coated board)

Protection type

20 = IP20/NEMA 0
55 = IP55/NEMA 12
66 = IP66/NEMA 4X
6S = IP66 with switch/NEMA 4X, switched

Display unit (display)

A = 7-digital display assembly
B = plain text display

Brake chopper

B = brake chopper

EMC (radio interference suppression filter)

N = no internal RFI filter
F = internal RFI filter

Sizes and degree of protection

Frame size	Protection type			
	IP20/NEMA 0	IP55/NEMA 12	IP66/NEMA 4X	IP66/NEMA 4X Local controls
FS2			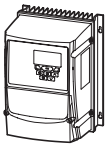	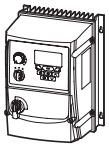
FS3			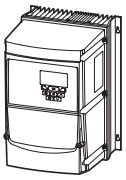	
FS4			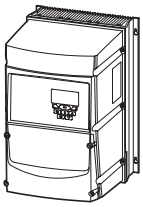	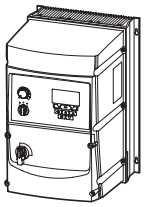
FS5	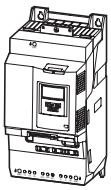			
FS6				
FS7		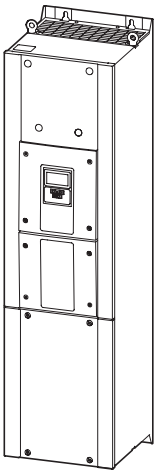		

Ordering

Rated operational current [1) 4)]	Assigned motor output [1) 2) 3)]		Configuration							Frame size	Protection type	**Catalog Number** Article no.	Std. pack
			Radio interference suppression filter	Brake chopper	DC link choke	7-segment display	Plain text display	Safe Torque Off	Local controls				
I_e A	P kW	P HP											
PowerXL variable frequency drives DA1													
U_e 230 V AC, single-phase / U_2 230 V AC, three-phase Mains voltage (50/60Hz) U_{LN} 200 (-10%) - 240 (+10%) V													
4.3	0.75	1	✓	✓	–	✓	–	✓	–	FS2	IP20/NEMA 0	**DA1-124D3FB-A20C** 169078	1 unit
7	1.5	2	✓	✓	–	✓	–	✓	–			**DA1-127D0FB-A20C** 169081	
10.5	2.2	3	✓	✓	–	✓	–	✓	–			**DA1-12011FB-A20C** 169084	
U_e 230 V AC, three-phase / U_2 230 V AC, three-phase Mains voltage (50/60Hz) U_{LN} 200 (-10%) - 240 (+10%) V													
4.3	0.75	1	✓	✓	–	✓	–	✓	–	FS2	IP20/NEMA 0	**DA1-324D3FB-A20C** 169087	1 unit
7	1.5	2	✓	✓	–	✓	–	✓	–			**DA1-327D0FB-A20C** 169090	
10.5	2.2	3	✓	✓	–	✓	–	✓	–			**DA1-32011FB-A20C** 169093	
18	4	5	✓	✓	–	✓	–	✓	–	FS3		**DA1-32018FB-A20C** 169096	
24	5.5	7.5	✓	✓	–	✓	–	✓	–			**DA1-32024FB-A20C** 169099	
30	7.5	10	✓	✓	–	–	✓	✓	–	FS4		**DA1-32030FB-B20C** 197488	
46	11	15	✓	✓	–	–	✓	✓	–			**DA1-32046FB-B20C** 197489	
61	15	20	✓	✓	✓	–	✓	✓	–	FS5		**DA1-32061FB-B20C** 197490	
72	18.5	25	✓	✓	✓	–	✓	✓	–			**DA1-32072FB-B20C** 197491	
24[5)]	5.5	7.5	✓	✓	–	–	✓	✓	–	FS4	IP55/NEMA 12	**DA1-32024FB-B55C** 169361	
30	7.5	10	✓	✓	–	–	✓	✓	–			**DA1-32030FB-B55C** 169362	
46	11	15	✓	✓	–	–	✓	✓	–			**DA1-32046FB-B55C** 169363	
61	15	20	✓	✓	✓	–	✓	✓	–	FS5		**DA1-32061FB-B55C** 169364	
72	18.5	25	✓	✓	✓	–	✓	✓	–			**DA1-32072FB-B55C** 169365	
90[5)]	22	30	✓	✓	✓	–	✓	✓	–	FS6		**DA1-32090FB-B55C** 169367	
110[5)]	30	40	✓	✓	✓	–	✓	✓	–			**DA1-32110FB-B55C** 169369	
150[5)]	45	50	✓	✓	✓	–	✓	✓	–			**DA1-32150FB-B55C** 169371	
180[5)]	55	60	✓	✓	✓	–	✓	✓	–			**DA1-32180FB-B55C** 169373	
202[5)]	55	75	✓	✓	✓	–	✓	✓	–	FS7		**DA1-32202FB-B55C** 169375	
248[5)]	75	100	✓	✓	✓	–	✓	✓	–			**DA1-32248FB-B55C** 169377	

Notes

[1)] Overload cycle for 60 s every 600 s
[2)] At 230 V, 50 Hz/at 220 - 240 V, 60 Hz
[3)] For normal internally and externally ventilated four-pole three-phase asynchronous motors with 1500 rpm at 50 Hz and 1800 rpm at 60 Hz
[4)] IP20/NEMA 0: Rated operational current at an operating frequency of 16 kHz and an ambient air temperature of +50°C
IP55/NEMA 12: Rated operational current at a switching frequency of 16 kHz and an ambient air temperature of +40°C
[5)] IP20/NEMA 0: Rated operational current at an operating frequency of 8 kHz and an ambient air temperature of +50°C
IP55/NEMA 12: Rated operational current at a switching frequency of 8 kHz and an ambient air temperature of +40°C

2.4 Variable frequency drive DA1 to 160 kW

DA1 for three-phase motors 400 V, IP20/IP55

Rated operational current [1) 4)]	Assigned motor output [1) 2) 3)]		Configuration							Frame size	Protection type	**Catalog Number** Article no.	Std. pack
			Radio interference suppression filter	Brake chopper	DC link choke	7-segment display	Plain text display	Safe Torque Off	Local controls				
I_e A	P kW	P HP											
PowerXL variable frequency drives DA1													
U_e 400 V AC, three-phase / U_2 400 V AC, three-phase Mains voltage (50/60Hz) U_{LN} 380 (-10%) - 480 (+10%) V													
2.2	0.75	1	✓	✓	–	✓	–	✓	–	FS2	IP20/NEMA 0	**DA1-342D2FB-A20C** 169117	1 unit
4.1	1.5	2	✓	✓	–	✓	–	✓	–			**DA1-344D1FB-A20C** 169120	
5.8	2.2	3	✓	✓	–	✓	–	✓	–			**DA1-345D8FB-A20C** 169051	
9.5	4	5	✓	✓	–	✓	–	✓	–			**DA1-349D5FB-A20C** 169054	
14	5.5	7.5	✓	✓	–	✓	–	✓	–	FS3		**DA1-34014FB-A20C** 169057	
18	7.5	10	✓	✓	–	✓	–	✓	–			**DA1-34018FB-A20C** 169060	
24	11	15	✓	✓	–	✓	–	✓	–			**DA1-34024FB-A20C** 169063	
30	15	20	✓	✓	–	–	✓	✓	–	FS4		**DA1-34030FB-B20C** 197493	
39	18.5	25	✓	✓	–	–	✓	✓	–			**DA1-34039FB-B20C** 197494	
46	22	30	✓	✓	–	–	✓	✓	–			**DA1-34046FB-B20C** 197495	
61	30	40	✓	✓	✓	–	✓	✓	–	FS5		**DA1-34061FB-B20C** 197496	
72	37	50	✓	✓	✓	–	✓	✓	–			**DA1-34072FB-B20C** 197497	
24	11	15	✓	✓	–	–	✓	✓	–	FS4	IP55/NEMA 12	**DA1-34024FB-B55C** 169390	
30	15	20	✓	✓	–	–	✓	✓	–			**DA1-34030FB-B55C** 169391	
39	18.5	25	✓	✓	–	–	✓	✓	–			**DA1-34039FB-B55C** 169392	
46	22	30	✓	✓	–	–	✓	✓	–			**DA1-34046FB-B55C** 169393	
61	30	40	✓	✓	✓	–	✓	✓	–	FS5		**DA1-34061FB-B55C** 169394	
72	37	50	✓	✓	✓	–	✓	✓	–			**DA1-34072FB-B55C** 169395	
90[5)]	45	60	✓	✓	✓	–	✓	✓	–	FS6		**DA1-34090FB-B55C** 169397	
110[5)]	55	75	✓	✓	✓	–	✓	✓	–			**DA1-34110FB-B55C** 169399	
150[5)]	75	100	✓	✓	✓	–	✓	✓	–			**DA1-34150FB-B55C** 169401	
180[5)]	90	125	✓	✓	✓	–	✓	✓	–			**DA1-34180FB-B55C** 169403	
202[5)]	110	150	✓	✓	✓	–	✓	✓	–	FS7		**DA1-34202FB-B55C** 169405	
240[5)]	132	200	✓	✓	✓	–	✓	✓	–			**DA1-34240FB-B55C** 169407	
302[5)]	160	250	✓	✓	✓	–	✓	✓	–			**DA1-34302FB-B55C** 169217	

Notes

[1)] Overload cycle for 60 s every 600 s
[2)] At 400 V, 50 Hz/at 440 - 480 V, 60 Hz
[2)] For normal internally and externally ventilated four-pole three-phase asynchronous motors with 1500 rpm at 50 Hz and 1800 rpm at 60 Hz
[4)] IP20/NEMA 0: Rated operational current at an operating frequency of 8 kHz and an ambient air temperature of +50°C
IP55/NEMA 12: Rated operational current at an operating frequency of 8 kHz and an ambient air temperature of +40°C
[5)] IP20/NEMA 0: Rated operational current at an operating frequency of 4 kHz and an ambient air temperature of +50°C
IP55/NEMA 12: Rated operational current at an operating frequency of 4 kHz and an ambient air temperature of +40°C

Rated operational current [1) 4)]	Assigned motor output [1) 2) 3)]		Configuration							Frame size	Protection type	**Catalog Number** Article no.	Std. pack
			Radio interference suppression filter	Brake chopper	DC link choke	7-segment display	Plain text display	Safe Torque Off	Local controls				
I_e A	P kW	P HP											
PowerXL variable frequency drives DA1													
U_e 500 V AC, three-phase / U_2 500 V AC, three-phase Mains voltage (50/60Hz) U_{LN} 500 (-10%) - 600 (+10%) V													
2.1	0.75	1	–	✓	–	✓	–	✓	–	FS2	IP20/NEMA 0	**DA1-352D1NB-A20C** 177034	1 unit
3.1	1.5	2	–	✓	–	✓	–	✓	–			**DA1-353D1NB-A20C** 177035	
4.1	2.2	3	–	✓	–	✓	–	✓	–			**DA1-354D1NB-A20C** 177036	
6.5	4	5	–	✓	–	✓	–	✓	–			**DA1-356D5NB-A20C** 177037	
9	5.5	7.5	–	✓	–	✓	–	✓	–			**DA1-359D0NB-A20C** 177038	
12	7.5	10	–	✓	–	✓	–	✓	–	FS3		**DA1-35012NB-A20C** 177039	
17	11	15	–	✓	–	✓	–	✓	–			**DA1-35017NB-A20C** 177040	
22	15	20	–	✓	–	✓	–	✓	–			**DA1-35022NB-A20C** 177041	
28	18.5	25	–	✓	–	–	✓	✓	–	FS4		**DA1-35028NB-B20C** 197499	
34	22	30	–	✓	–	–	✓	✓	–			**DA1-35034NB-B20C** 197500	
43	30	40	–	✓	–	–	✓	✓	–			**DA1-35043NB-B20C** 197501	
54	37	50	–	✓	✓	–	✓	✓	–	FS5		**DA1-35054NB-B20C** 197502	
65	45	60	–	✓	✓	–	✓	✓	–			**DA1-35065NB-B20C** 197503	
22	15	20	–	✓	–	–	✓	✓	–	FS4	IP55/NEMA 12	**DA1-35022NB-B55C** 176965	
28	18.5	25	–	✓	–	–	✓	✓	–			**DA1-35028NB-B55C** 176966	
34	22	30	–	✓	–	–	✓	✓	–			**DA1-35034NB-B55C** 176967	
43	30	40	–	✓	✓	–	✓	✓	–	FS5		**DA1-35043NB-B55C** 176968	
54	37	50	–	✓	✓	–	✓	✓	–			**DA1-35054NB-B55C** 176969	
65	45	60	–	✓	✓	–	✓	✓	–			**DA1-35065NB-B55C** 176970	
78[5)]	55	75	–	✓	✓	–	✓	✓	–	FS6		**DA1-35078NB-B55C** 176971	
105[5)]	75	100	–	✓	✓	–	✓	✓	–			**DA1-35105NB-B55C** 176972	
130[5)]	90	125	–	✓	✓	–	✓	✓	–			**DA1-35130NB-B55C** 176973	
150[5)]	110	150	–	✓	✓	–	✓	✓	–			**DA1-35150NB-B55C** 176974	

Notes

[1)] Overload cycle for 60 s every 600 s
[2)] At 500 V, 50 Hz/at 550 - 600 V, 60 Hz
[2)] For normal internally and externally ventilated four-pole three-phase asynchronous motors with 1500 rpm at 50 Hz and 1800 rpm at 60 Hz
[4)] IP20/NEMA 0: Rated operational current at an operating frequency of 8 kHz and an ambient air temperature of +50°C
IP55/NEMA 12: Rated operational current at an operating frequency of 8 kHz and an ambient air temperature of +40°C
[5)] IP20/NEMA 0: Rated operational current at an operating frequency of 4 kHz and an ambient air temperature of +50°C
IP55/NEMA 12: Rated operational current at an operating frequency of 4 kHz and an ambient air temperature of +40°C

2.4 Variable frequency drive DA1 to 160 kW

DA1 for three-phase motors 230 V, IP66

Rated operational current [1) 4)]	Assigned motor output [1) 2) 3)]		Configuration							Frame size	Protection type	**Catalog Number** Article no.	Std. pack
			Radio interference suppression filter	Brake chopper	DC link choke	7-segment display	Plain text display	Safe Torque Off	Local controls				
I_e A	P kW	P HP											
PowerXL variable frequency drives DA1													
U_e 230 V AC, single-phase / U_2 230 V AC, three-phase Mains voltage (50/60Hz) U_{LN} 200 (-10%) - 240 (+10%) V													
4.3	0.75	1	✓	✓	–	–	✓	✓	–	FS2	IP66/NEMA 4X	**DA1-124D3FB-B66O** 400015	1 unit
4.3	0.75	1	✓	✓	–	–	✓	✓	✓			**DA1-124D3FB-B6SO** 400016	
7	1.5	2	✓	✓	–	–	✓	✓	–			**DA1-127D0FB-B66O** 400017	
7	1.5	2	✓	✓	–	–	✓	✓	✓			**DA1-127D0FB-B6SO** 400018	
10.5	2.2	3	✓	✓	–	–	✓	✓	–			**DA1-12011FB-B66O** 400019	
10.5	2.2	3	✓	✓	–	–	✓	✓	✓			**DA1-12011FB-B6SO** 400020	
U_e 230 V AC, three-phase / U_2 230 V AC, three-phase Mains voltage (50/60Hz) U_{LN} 200 (-10%) - 240 (+10%) V													
4.3	0.75	1	✓	✓	–	–	✓	✓	–	FS2	IP66/NEMA 4X	**DA1-324D3FB-B66O** 400021	1 unit
4.3	0.75	1	✓	✓	–	–	✓	✓	✓			**DA1-324D3FB-B6SO** 400022	
7	1.5	2	✓	✓	–	–	✓	✓	–			**DA1-327D0FB-B66O** 400023	
7	1.5	2	✓	✓	–	–	✓	✓	✓			**DA1-327D0FB-B6SO** 400024	
10.5	2.2	3	✓	✓	–	–	✓	✓	–			**DA1-32011FB-B66O** 400025	
19.5	2.2	3	✓	✓	–	–	✓	✓	✓			**DA1-32011FB-B6SO** 400026	
18	4	5	✓	✓	–	–	✓	✓	–	FS3		**DA1-32018FB-B66O** 400027	
18	4	5	✓	✓	–	–	✓	✓	✓			**DA1-32018FB-B6SO** 400028	
24	5.5	7.5	✓	✓	–	–	✓	✓	–			**DA1-32024FB-B66O** 400029	
24	5.5	7.5	✓	✓	–	–	✓	✓	✓			**DA1-32024FB-B6SO** 400030	
30	7.5	10	✓	✓	–	–	✓	✓	–	FS4		**DA1-32030FB-B66O** 400031	
30	7.5	10	✓	✓	–	–	✓	✓	✓			**DA1-32030FB-B6SO** 400032	
46	11	15	✓	✓	–	–	✓	✓	–			**DA1-32046FB-B66O** 400033	
46	11	15	✓	✓	–	–	✓	✓	✓			**DA1-32046FB-B6SO** 400034	

Notes

1) Overload cycle for 60 s every 600 s
2) At 230 V, 50 Hz/at 220 - 240 V, 60 Hz
3) For normal internally and externally ventilated four-pole three-phase asynchronous motors with 1500 rpm at 50 Hz and 1800 rpm at 60 Hz
4) Rated operational current at a switching frequency of 16 kHz and an ambient air temperature of +40°C

Rated operational current [1) 4)]	Assigned motor output [1) 2) 3)]		Configuration							Frame size	Protection type	**Catalog Number** Article no.	Std. pack
			Radio interference suppression filter	Brake chopper	DC link choke	7-segment display	Plain text display	Safe Torque Off	Local controls				
I_e A	P kW	P HP											
PowerXL variable frequency drives DA1													
U_e 400 V AC, three-phase / U_2 400 V AC, three-phase Mains voltage (50/60Hz) U_{LN} 380 (-10%) - 480 (+10%) V													
2.2	0.75	1	✓	✓	–	–	✓	✓	–	FS2	IP66/NEMA 4X	**DA1-342D2FB-B66O** 400035	1 unit
2.2	0.75	1	✓	✓	–	–	✓	✓	✓			**DA1-342D2FB-B6SO** 400036	
4.1	1.5	2	✓	✓	–	–	✓	✓	–			**DA1-344D1FB-B66O** 400037	
4.1	1.5	2	✓	✓	–	–	✓	✓	✓			**DA1-344D1FB-B6SO** 400038	
5.8	2.2	3	✓	✓	–	–	✓	✓	–			**DA1-345D8FB-B66O** 400039	
5.8	2.2	3	✓	✓	–	–	✓	✓	✓			**DA1-345D8FB-B6SO** 400040	
9.5	4	5	✓	✓	–	–	✓	✓	–			**DA1-349D5FB-B66O** 400041	
9.5	4	5	✓	✓	–	–	✓	✓	✓			**DA1-349D5FB-B6SO** 400042	
14	5.5	7.5	✓	✓	–	–	✓	✓	–	FS3		**DA1-34014FB-B66O** 400043	
14	5.5	7.5	✓	✓	–	–	✓	✓	✓			**DA1-34014FB-B6SO** 400044	
18	7.5	10	✓	✓	–	–	✓	✓	–			**DA1-34018FB-B66O** 400045	
18	7.5	10	✓	✓	–	–	✓	✓	✓			**DA1-34018FB-B6SO** 400046	
24	11	15	✓	✓	–	–	✓	✓	–			**DA1-34024FB-B66O** 400047	
24	11	15	✓	✓	–	–	✓	✓	✓			**DA1-34024FB-B6SO** 400048	
30	15	20	✓	✓	–	–	✓	✓	–	FS4		**DA1-34030FB-B66O** 400049	
30	15	20	✓	✓	–	–	✓	✓	✓			**DA1-34030FB-B6SO** 400050	
39	18.5	25	✓	✓	–	–	✓	✓	–			**DA1-34039FB-B66O** 400051	
39	18.5	25	✓	✓	–	–	✓	✓	✓			**DA1-34039FB-B6SO** 400052	
46	22	30	✓	✓	–	–	✓	✓	–			**DA1-34046FB-B66O** 400053	
46	22	30	✓	✓	–	–	✓	✓	✓			**DA1-34046FB-B6SO** 400054	

Notes

[1)] Overload cycle for 60 s every 600 s
[2)] DA1-34…: at 400 V, 50 Hz/at 440 - 480 V, 60 Hz
DA1-35…: at 500 V, 50 Hz/bei 550 - 600 V, 60 Hz
[3)] For normal internally and externally ventilated four-pole three-phase asynchronous motors with 1500 rpm at 50 Hz and 1800 rpm at 60 Hz
[4)] Rated operational current at a switching frequency of 8 kHz and an ambient air temperature of +40°C

2.4 Variable frequency drive DA1 to 160 kW

DA1 for three-phase motors 400 V/500 V, IP66

Rated operational current [1) 4)]	Assigned motor output [1) 2) 3)]		Configuration							Frame size	Protection type	**Catalog Number** Article no.	Std. pack
			Radio interference suppression filter	Brake chopper	DC link choke	7-segment display	Plain text display	Safe Torque Off	Local controls				
I_e A	P kW	P HP											
PowerXL variable frequency drives DA1													
U_e 500 V AC, three-phase / U_2 500 V AC, three-phase Mains voltage (50/60Hz) U_{LN} 500 (-10%) - 600 (+10%) V													
2.1	0.75	1	–	✓	–	–	✓	✓	–	FS2	IP66/NEMA 4X	**DA1-352D1NB-B66O** 400055	1 unit
2.1	0.75	1	–	✓	–	–	✓	✓	✓			**DA1-352D1NB-B6SO** 400056	
3.1	1.5	2	–	✓	–	–	✓	✓	–			**DA1-353D1NB-B66O** 400057	
3.1	1.5	2	–	✓	–	–	✓	✓	✓			**DA1-353D1NB-B6SO** 400058	
4.1	2.2	3	–	✓	–	–	✓	✓	–			**DA1-354D1NB-B66O** 400059	
4.1	2.2	3	–	✓	–	–	✓	✓	✓			**DA1-354D1NB-B6SO** 400060	
6.5	4	5	–	✓	–	–	✓	✓	–			**DA1-356D5NB-B66O** 400061	
6.5	4	5	–	✓	–	–	✓	✓	✓			**DA1-356D5NB-B6SO** 400062	
9	5.5	7.5	–	✓	–	–	✓	✓	–			**DA1-359D0NB-B66O** 400063	
9	5.5	7.5	–	✓	–	–	✓	✓	✓			**DA1-359D0NB-B6SO** 400064	
12	7.5	10	–	✓	–	–	✓	✓	–	FS3		**DA1-35012NB-B66O** 400065	
12	7.5	10	–	✓	–	–	✓	✓	✓			**DA1-35012NB-B6SO** 400066	
17	11	15	–	✓	–	–	✓	✓	–			**DA1-35017NB-B66O** 400067	
17	11	15	–	✓	–	–	✓	✓	✓			**DA1-35017NB-B6SO** 400068	
22	15	20	–	✓	–	–	✓	✓	–			**DA1-35022NB-B66O** 400069	
22	15	20	–	✓	–	–	✓	✓	✓			**DA1-35022NB-B6SO** 400070	
28	18.5	25	–	✓	–	–	✓	✓	–	FS4		**DA1-35028NB-B66O** 400071	
28	18.5	25	–	✓	–	–	✓	✓	✓			**DA1-35028NB-B6SO** 400072	
34	22	30	–	✓	–	–	✓	✓	–			**DA1-35034NB-B66O** 400073	
34	22	30	–	✓	–	–	✓	✓	✓			**DA1-35034NB-B6SO** 400074	
43	22	30	–	✓	–	–	✓	✓	–			**DA1-35043NB-B66O** 400075	
43	22	30	–	✓	–	–	✓	✓	✓			**DA1-35043NB-B6SO** 400076	

Notes

1) Overload cycle for 60 s every 600 s
2) DA1-34…: at 400 V, 50 Hz/at 440 - 480 V, 60 Hz
DA1-35…: at 500 V, 50 Hz/bei 550 - 600 V, 60 Hz
3) For normal internally and externally ventilated four-pole three-phase asynchronous motors with 1500 rpm at 50 Hz and 1800 rpm at 60 Hz
4) Rated operational current at a switching frequency of 8 kHz and an ambient air temperature of +40°C

	Description	Length m	For use with	Catalog Number Article no.	Std. pack
	**External operating units**				
	With 7-digital display assembly Front IP54 With approx. 3 m-long, plug-in connection cable (RJ45, 8-pin)	3	DE1, DE11, DC1, DB1, DA1	**DX-KEY-LED2** 186946	1 unit
	With multi-language plain text display (OLED) Front IP54 With approx. 3 m-long, plug-in connection cable (RJ45, 8-pin)	3	DC1, DB1, DA1, RAM05, RASP5	**DX-KEY-OLED** 169133	
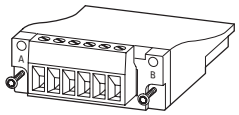	**Expansion modules**				
	Output expansion Plug-in module with plug-in terminal block, 5 pole 3 relay outputs (N/O, 250 V AC, max. 6 A/ 30 V DC, max. 5 A)	–	DA1	**DXA-EXT-3RO** 169121	1 unit
	I/O expansion Plug-in module with plug-in terminal block, 6 pole 3 digital inputs (+24 V) 1 relay output (N/O, 250 V AC, max. 6 A/ 30 V DC, max. 5 A)	–	DA1	**DXA-EXT-3DI1RO** 169036	
	Encoder module Plug-in module with plug-in terminal block, 5 pole 2-channel max. 500 kHz 5 V TTL, A & B, /A & /B, 5 V DC, max. 200 mA 24 V HTL, A & B, /A & /B, 24 V DC, external power supply required, max. 30 V DC	–	DA1	**DXA-EXT-ENCOD** 169035	
	Communication modules				
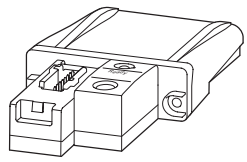	SmartWire-DT Plug-in module with slot for SWD4-8SF2-5 external device plug	–	DA1 (IP20, IP55)	**DX-NET-SWD1** 169129	1 unit
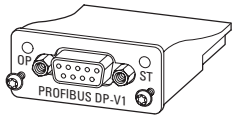	PROFIBUS SUB-D socket, 9-pole Plug-in module	–	DA1	**DX-NET-PROFIBUS** 169124	1 unit
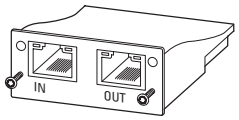	PROFINET 2 x RJ45, 8 pole Plug-in module	–	DA1	**DX-NET-PROFINET-2** 169125	
	Modbus TCP 2 x RJ45, 8 pole Plug-in module	–	DA1	**DX-NET-MODBUSTCP-2** 169126	
	EtherNet/IP 2 x RJ45, 8 pole Plug-in module	–	DA1	**DX-NET-ETHERNET-2** 169122	
	EtherCAT 2 x RJ45, 8 pole Plug-in module	–	DA1	**DX-NET-ETHERCAT-2** 169127	
	BACnet/IP 2 x RJ45, 8 pole Plug-in module	–	DA1	**DX-NET-BACNETIP-2** 169128	
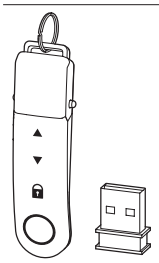	**Parameter assignment**				
	Parameter storage unit and Bluetooth communication stick				
	For storage, copying parameters, and/or transferring parameters to a PC or smartphone (iOS or Android) via Bluetooth with the drivesConnect software or the drivesConnect mobile app respectively With 2 function keys for uploading and downloading parameters with configuration memory	–	DE1, DE11, DC1, DB1, DA1, RAM05, RASP5	**DX-COM-STICK3-KIT** 197586	1 unit
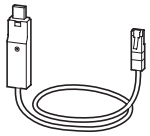	**Programming cable**				
	Interface converter USB/RS485 with connection cable, RJ45 8 pole For storage, copying parameters, and/or transferring parameters to a PC with the drivesConnect software, electrically isolated	3	DE1, DE11, DC1, DB1, DA1, RAM05, RASP5	**DX-CBL-PC-3M0** 744-A3036-00P	1 unit

	Description		Length m	For use with	Catalog Number Article no.	Std. pack
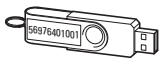	**License Keys**					
	to activate the function block editor in the PC software					
	USB flash drive		–	DA1	**DX-COM-SOFT** 169136	1 unit
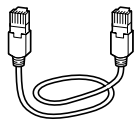	**Connection cable**					
	Patch cord with RJ45 plugs, 8 pole		0.5	DE1, DE11, DC1, DB1, DA1	**DX-CBL-RJ45-0M5** 169137	1 unit
			1		**DX-CBL-RJ45-1M0** 169138	
			3		**DX-CBL-RJ45-3M0** 169139	
	**Bus terminating resistor**					
	RJ45 8 pole Connection to CANopen® (pin 1/2, 124 Ω) or to Modbus RTU (pin 7/8, 120 Ω)		–	DX-SPL-RJ45-2SL-1PL	**EASY-NT-R** 256281	2 unit
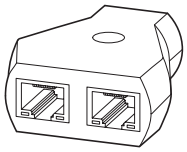	**Splitter**					
	RJ45, 8-pin, 3 sockets		–	DX-CBL-RJ45…	**DX-SPL-RJ45-3SL** 169141	1 unit
	RJ45, 8-pin, 2 sockets/1 plug		–	DE1, DE11, DC1, DB1, DA1	**DX-SPL-RJ45-2SL1PL** 169142	
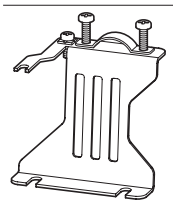	**Mounting accessories**					
	Mounting adapter with gland plates					
	For installing the connection cables on the mains side	Size FS2	–	DC1 (IP20), DA1 (IP20)	**DX-EMC-MNT-2N** 172927	1 unit
		Size FS3	–	DC1 (IP20), DA1 (IP20)	**DX-EMC-MNT-3N** 172929	
	For installing the connection cables on the motor side	Size FS2	–	DC1 (IP20), DA1 (IP20)	**DX-EMC-MNT-2M** 172928	
		Size FS3	–	DC1 (IP20), DA1 (IP20)	**DX-EMC-MNT-3M** 172930	

Engineering

DA1-…-A20C

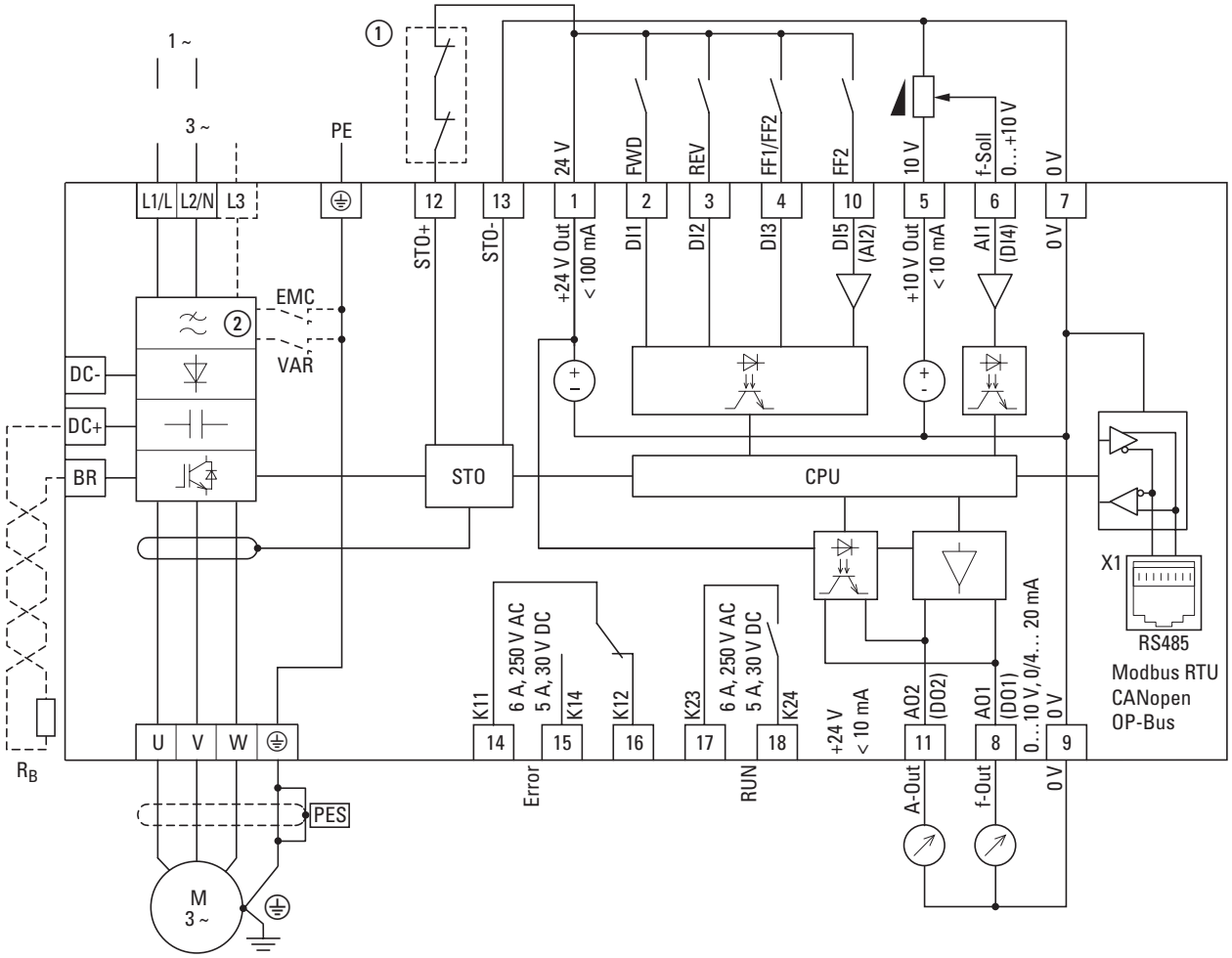

① Relais: Safe Torque Off (STO), SIL 2 (EN 61800-5-2).
② The RFI filter is not included in the DA1-35-…-B6XC device.

→ The STO connection must be made by the user.

→ The VAR screw cannot be disabled in devices with a size of FS4 or FS5.

Catalog Number	Mains		Motor	
	Voltage U_{LN}	Frequency f_{LN}	Voltage U_2	Frequency f_2
DA1-12-…-A20C	1~ 200 V (-10%) - 240 V (+10%)	50/60 Hz	3~ 230 V	0-500Hz
DA1-32-…-A20C	3~ 200 V (-10%) - 240 V (+10%)	50/60 Hz	3~ 230 V	0-500Hz
DA1-34-…-A20C	3~ 380 V (-10%) - 480 V (+10%)	50/60 Hz	3~ 400 V/460 V	0-500Hz
DA1-35-…-A20C	3~ 500 V (-10%) - 600 V (+10%)	50/60 Hz	3~ 500 V/575 V	0-500Hz

2.4 Variable frequency drive DA1 to 160 kW

Block diagram

DA1-…-B55C

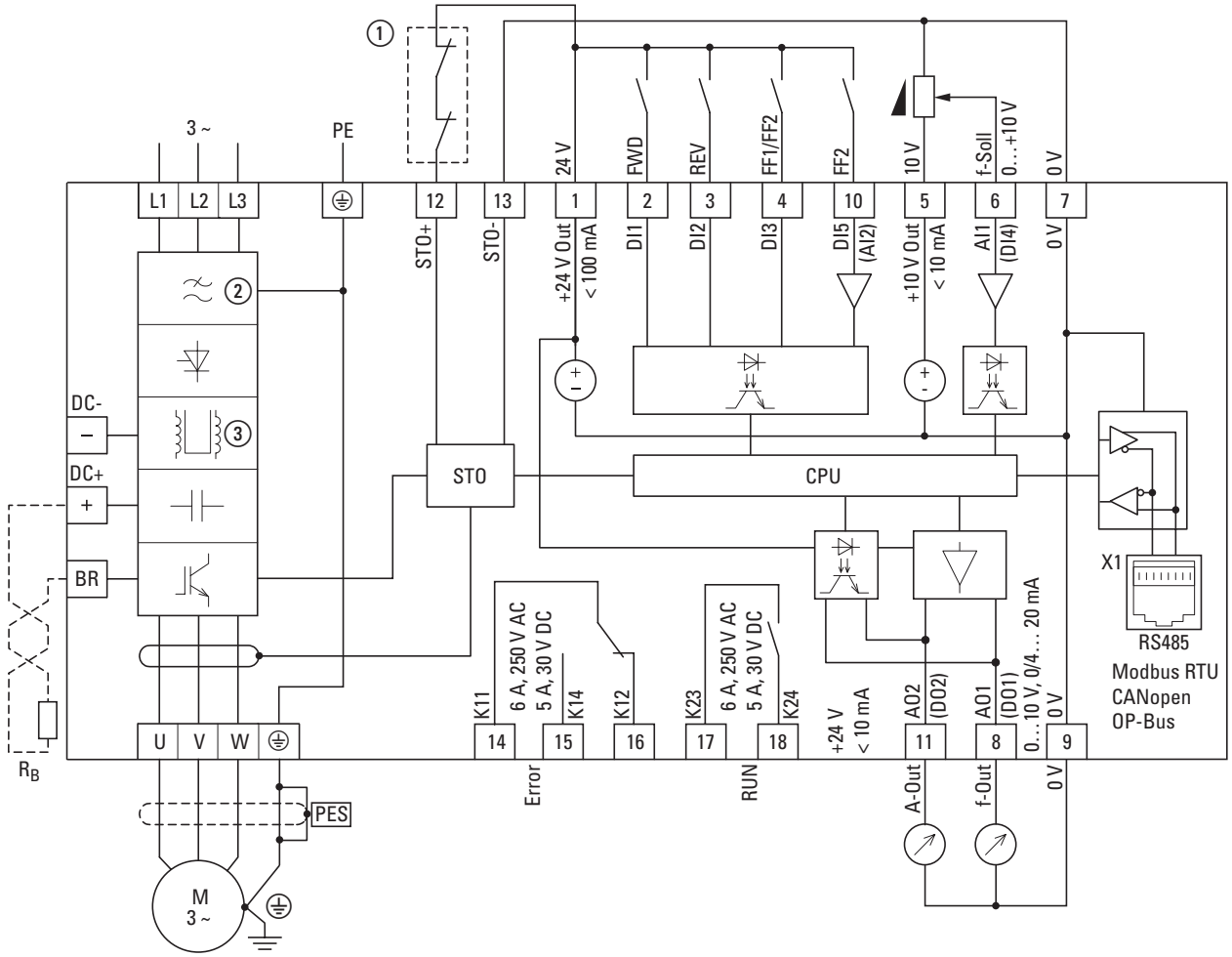

① Direct enable signal for STO function or relay: Safe Torque Off (STO), SIL 2 (EN 61800-5-2).
② The RFI filter is not included in the DA1-35-…-B6XC device.
③ A DC link choke is included in sizes of FS5, FS6, FS7.

→ The STO connection must be made by the user.

→ The VAR screw cannot be disabled in devices with a size of FS4, FS5, FS6, or FS7.

Catalog Number	Mains		Motor	
	Voltage U_{LN}	Frequency f_{LN}	Voltage U_2	Frequency f_2
DA1-32-…-B55C	3~ 200 V (-10%) - 240 V (+10%)	50/60 Hz	3~ 230 V	0-500Hz
DA1-34-…-B55C	3~ 380 V (-10%) - 480 V (+10%)	50/60 Hz	3~ 400 V/460 V	0-500Hz
DA1-35-…-B55C	3~ 500 V (-10%) - 600 V (+10%)	50/60 Hz	3~ 500 V/575 V	0-500Hz

DA1-…-B6SC

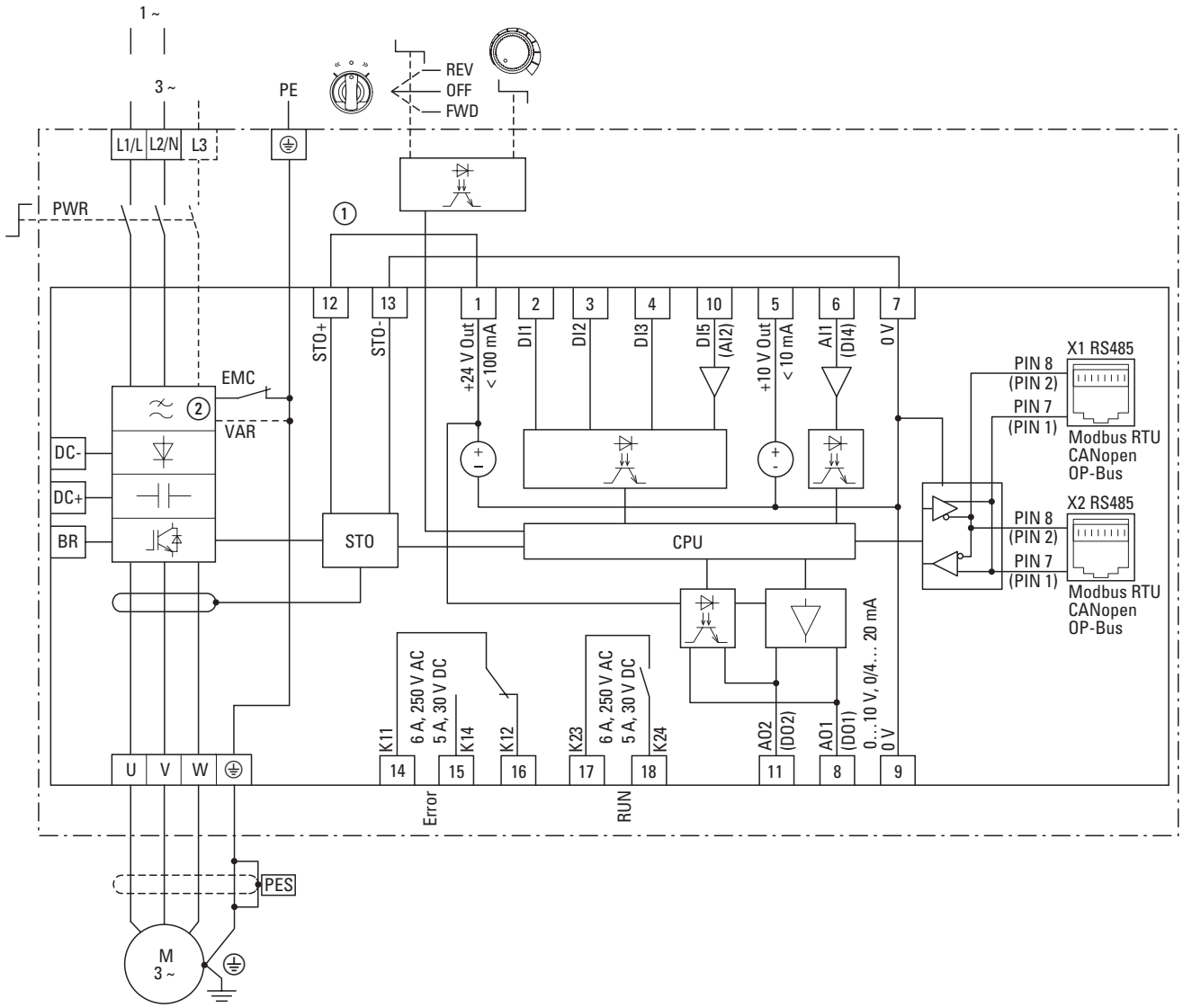

① Direct enable signal for STO function or relay: Safe Torque Off (STO), SIL 2 (EN 61800-5-2).
② The RFI filter is not included in the DA1-35-…-B6XC device.

→ The STO connection must be made by the user.

Catalog Number	Mains		Motor	
	Voltage U_{LN}	Frequency f_{LN}	Voltage U_2	Frequency f_2
DA1-12-…-B6SC	1~ 200 V (-10%) - 240 V (+10%)	50/60 Hz	3~ 230 V	0-500Hz
DA1-32-…-B6SC	3~ 200 V (-10%) - 240 V (+10%)	50/60 Hz	3~ 230 V	0-500Hz
DA1-34-…-B6SC	3~ 380 V (-10%) - 480 V (+10%)	50/60 Hz	3~ 400 V/460 V	0-500Hz
DA1-35-…-B6SC	3~ 500 V (-10%) - 600 V (+10%)	50/60 Hz	3~ 500 V/575 V	0-500Hz

2.4 Variable frequency drive DA1 to 160 kW

Assigned switching and protective elements

Catalog Number	Motor	Variable frequency drives		Mains connection			
	Assigned motor output [1) 2)]	Rated operational current [1)]	Input current	Protection device (fuse or miniature circuit-breaker)		Mains contactor	Mains choke
	I_H = 150%	I_H = 150%	I_H = 150%	IEC (Type B, gG), 150%	UL (Class CC or J)	I_H = 150% (CT/IH, at 50°C)	I_H = 150% (at 50°C)
	P	I_e	I_{LN}				
	kW	A	A		A		
230 V AC, single-phase/230 V AC, three-phase							
DA1-124D3…	0.75	4.3	8.6	FAZ-B16/1N	16	DILM7	DX-LN1-013
DA1-127D0…	1.5	7	12.9	FAZ-B20/1N	20	DILM7	DX-LN1-018
DA1-12011…	2.2	10.5	19.2	FAZ-B25/1N	25	DILM7	DX-LN1-024
230 V AC, three-phase/230 V AC, three-phase							
DA1-324D3…	0.75	4.3	5.7	FAZ-B10/3	10	DILM7	DX-LN3-006
DA1-327D0…	1.5	7	10.5	FAZ-B10/3	15	DILM7	DX-LN3-010
DA1-32011…	2.2	10.5	13.2	FAZ-B16/3	17.5	DILM7	DX-LN3-016
DA1-32018…	4	18	20.9	FAZ-B25/3	30	DILM7	DX-LN3-025
DA1-32024…	5.5	24	26.4	FAZ-B40/3	40	DILM17	DX-LN3-025
DA1-32030…	7.5	30	33.3	FAZ-B50/3	50	DILM17	DX-LN3-040
DA1-32046…	11	46	50.1	FAZ-B63/3	70	DILM40	DX-LN3-050
DA1-32061…	15	61	63.9	NZMC1-S80	90	DILM50	DX-LN3-080
DA1-32072…	22	72	74	NZMC2-S125	110	DILM65	DX-LN3-080[3)]
DA1-32090…	22	90	99.1	NZMC2-S125	150	DILM80	DX-LN3-100[3)]
DA1-32110…	30	110	121	NZMC2-S160	175	DILM95	DX-LN3-120[3)]
DA1-32150…	45	150	159.7	NZMC2-S200	225	DILM150	DX-LN3-160[3)]
DA1-32180…	55	180	187.5	NZMC3-S250	250	DILM170	DX-LN3-200[3)]
DA1-32202…	55	202	206.5	NZMC3-S250	300	DILM185A	DX-LN3-250[3)]
DA1-32248…	75	248	255.5	NZMC3-S320	350	DILM185A	DX-LN3-300[3)]
400 V AC, three-phase/400 V AC, three-phase							
DA1-342D2…	0.75	2.2	3.5	FAZ-B6/3	6	DILM7	DX-LN3-006
DA1-344D1…	1.5	4.1	5.6	FAZ-B10/3	10	DILM7	DX-LN3-006
DA1-345D8…	2.2	5.8	7.5	FAZ-B10/3	10	DILM7	DX-LN3-010
DA1-349D5…	4	9.5	11.5	FAZ-B16/3	15	DILM7	DX-LN3-010
DA1-34014…	5.5	14	17.2	FAZ-B25/3	25	DILM7	DX-LN3-016
DA1-34018…	7.5	18	21.8	FAZ-B32/3	30	DILM7	DX-LN3-025
DA1-34024…	11	24	27.5	FAZ-B40/3	40	DILM17	DX-LN3-025
DA1-34030…	15	30	34.2	FAZ-B50/3	50	DILM17	DX-LN3-040
DA1-34039…	18.5	39	44.1	FAZ-B63/3	60	DILM25	DX-LN3-040
DA1-34046…	22	46	51.9	NZMC1-S80	70	DILM40	DX-LN3-050
DA1-34061…	30	61	66.1	NZMC1-S80	80	DILM50	DX-LN3-080[3)]
DA1-34072…	37	72	77.3	NZMC1-S100	100	DILM65	DX-LN3-080[3)]
DA1-34090…	45	90	102.7	NZMC2-S125	125	DILM80	DX-LN3-100[3)]
DA1-34110…	55	110	126.4	NZMC2-S160	150	DILM95	DX-LN3-120[3)]
DA1-34150…	75	150	164.7	NZMC2-S200	200	DILM150	DX-LN3-160[3)]
DA1-34180…	90	180	192.1	NZMC3-S250	250	DILM170	DX-LN3-200[3)]
DA1-34202…	110	202	210.8	NZMC3-S320	300	DILM185A	DX-LN3-250[3)]
DA1-34240…	132	240	244.5	NZMC3-S320	350	DILM185A	DX-LN3-250[3)]
DA1-34302…	160	302	307.8	NZMC3-S400	400	DILM225A	DX-LN3-370[3)]

Notes

[1)] Overload cycle for 60 s every 600 s

[2)] For normal internally and externally ventilated four-pole three-phase asynchronous motors with 1500 rpm at 50 Hz and 1800 rpm at 60 Hz

[3)] Mains choke recommended only if the power quality is poor. Current harmonics (THD) are attenuated by internal DC link chokes.

[4)] If it is not guaranteed that the system percentage impedance is greater than or equal to 1%, a mains choke (U_K = 1 - 4%) must be connected upstream.

[5)] Optional external radio interference suppression filter for longer motor cable lengths and for use in different EMC environments

Mains connection	**DC link connection**		**Motor feeder**	
	Braking resistance		Motor choke	Sine filter
Radio interference suppression filter (external, 150%)[5)]	10% duty factor (ED)	20% duty factor (ED)	I_H = 150% (CT/I_H, at 50°C)	I_H = 150% (CT/I_H, at 50°C)
DX-EMC12-014-FS2	DX-BR100-0K2	DX-BR100-0K4	DX-LM3-008	DX-SIN3-010
DX-EMC12-014-FS2	DX-BR050-0K4	DX-BR050-0K8	DX-LM3-008	DX-SIN3-010
DX-EMC12-025-FS2	DX-BR050-0K8	DX-BR035-1K1	DX-LM3-016	DX-SIN3-016
DX-EMC34-008	DX-BR100-0K2	DX-BR100-0K4	DX-LM3-008	DX-SIN3-010
DX-EMC34-008	DX-BR050-0K4	DX-BR050-0K8	DX-LM3-008	DX-SIN3-010
DX-EMC34-016	DX-BR050-0K8	DX-BR035-1K1	DX-LM3-016	DX-SIN3-016
DX-EMC34-030	DX-BR022-1K4	DX-BR022-3K1	DX-LM3-035	DX-SIN3-023
DX-EMC34-030	DX-BR022-1K4	DX-BR022-3K1	DX-LM3-035	DX-SIN3-032
DX-EMC34-042	DX-BR022-1K4	DX-BR022-3K1	DX-LM3-035	DX-SIN3-032
DX-EMC34-055	DX-BR022-1K4	DX-BR022-3K1	DX-LM3-050	DX-SIN3-048
DX-EMC34-075	DX-BR012-3K1	DX-BR012-5K1	DX-LM3-063	DX-SIN3-061
DX-EMC34-075	DX-BR012-3K1	DX-BR012-5K1	DX-LM3-080	DX-SIN3-072
DX-EMC34-100	DX-BR006-5K1	DX-BR006-9K2	DX-LM3-100	DX-SIN3-090
DX-EMC34-130	DX-BR006-5K1	DX-BR006-9K2	DX-LM3-150	DX-SIN3-115
DX-EMC34-180	DX-BR006-5K1	DX-BR006-9K2	DX-LM3-180	DX-SIN3-150
DX-EMC34-250	DX-BR006-5K1	DX-BR006-9K2	DX-LM3-220	DX-SIN3-180
DX-EMC34-250	DX-BR006-5K1	DX-BR006-9K2	DX-LM3-220	DX-SIN3-250
DX-EMC34-400	DX-BR006-5K1	DX-BR006-9K2	DX-LM3-260	DX-SIN3-250
DX-EMC34-008	DX-BR400-0K4	DX-BR400-0K4	DX-LM3-008	DX-SIN3-004
DX-EMC34-008	DX-BR200-0K4	DX-BR200-0K8	DX-LM3-008	DX-SIN3-010
DX-EMC34-008	DX-BR150-0K5	DX-BR150-1K4	DX-LM3-008	DX-SIN3-010
DX-EMC34-016	DX-BR100-0K8	DX-BR100-1K4	DX-LM3-011	DX-SIN3-010
DX-EMC34-016	DX-BR075-1K4	DX-BR075-5K1	DX-LM3-016	DX-SIN3-016
DX-EMC34-030	DX-BR050-3K1	DX-BR050-5K1	DX-LM3-035	DX-SIN3-023
DX-EMC34-030	DX-BR040-3K1	DX-BR040-5K1	DX-LM3-035	DX-SIN3-023
DX-EMC34-042	DX-BR022-5K1	DX-BR022-9K2	DX-LM3-035	DX-SIN3-032
DX-EMC34-042	DX-BR022-5K1	DX-BR022-9K2	DX-LM3-050	DX-SIN3-048
DX-EMC34-055	DX-BR022-5K1	DX-BR022-9K2	DX-LM3-050	DX-SIN3-048
DX-EMC34-075	DX-BR012-9K2	DX-BR012-18K1	DX-LM3-063	DX-SIN3-061
DX-EMC34-075	DX-BR012-9K2	DX-BR012-18K1	DX-LM3-080	DX-SIN3-090
DX-EMC34-100	DX-BR006-18K1	DX-BR006-33K3	DX-LM3-100	DX-SIN3-090
DX-EMC34-130	DX-BR006-18K1	DX-BR006-33K3	DX-LM3-150	DX-SIN3-115
DX-EMC34-180	DX-BR006-18K1	DX-BR006-33K3	DX-LM3-180	DX-SIN3-150
DX-EMC34-250	DX-BR006-18K1	DX-BR006-33K3	DX-LM3-220	DX-SIN3-180
DX-EMC34-250	DX-BR006-18K1	DX-BR006-33K3	DX-LM3-220	DX-SIN3-250
DX-EMC34-250	DX-BR006-18K1	DX-BR006-33K3	DX-LM3-260	DX-SIN3-250
DX-EMC34-400	DX-BR006-18K1	DX-BR006-33K3	DX-LM3-370	DX-SIN3-440

2.4 Variable frequency drive DA1 to 160 kW

Assigned switching and protective elements

Catalog Number	Motor	Variable frequency drives		Mains connection			
	Assigned motor output [1) 2)]	Rated operational current[1)]	Input current	Protection device (fuse or miniature circuit-breaker)		Mains contactor	Mains choke
	I_H = 150%	I_H = 150%	I_H = 150%	IEC (Type B, gG), 150%[3)]	UL (Class CC or J)[4)]	I_H = 150% (CT/I_H, at 50°C)	I_H = 150% (at 50°C)
	P	I_e	I_{LN}				
	kW	A	A		A		
500 V AC, three-phase/500 V AC, three-phase							
DA1-352D1…	0.75	2.1	3.4	6NHG000B	LPJ-6SP	DILM7	DX-LN3-004
DA1-353D1…	1.5	3.1	4.2	6NHG000B	LPJ-6SP	DILM7	DX-LN3-004
DA1-354D1…	2.2	4.1	4.9	10NHG000B	LPJ-10SP	DILM7	DX-LN3-006
DA1-356D5…	4	6.5	8.6	10NHG000B	LPJ-10SP	DILM7	DX-LN3-010
DA1-359D0…	5.5	9	12.2	16NHG000B	LPJ-15SP	DILM7	DX-LN3-016
DA1-35012…	7.5	12	15.1	20NHG000B	LPJ-20SP	DILM7	DX-LN3-016
DA1-35017…	11	17	20.9	32NHG000B	LPJ-30SP	DILM17	DX-LN3-025
DA1-35022…	15	22	26	40NHG000B	LPJ-35SP	DILM17	DX-LN3-040
DA1-35028…	18.5	28	32.2	50NHG000B	LPJ-45SP	DILM17	DX-LN3-040
DA1-35034…	22	34	39.1	63NHG000B	LPJ-60SP	DILM25	DX-LN3-050
DA1-35043…	30	43	48.9	63NHG000B	LPJ-70SP	DILM40	DX-LN3-050
DA1-35054…	37	54	59.9	80NHG000B NZMC1-S80	LPJ-80SP	DILM50	DX-LN3-080
DA1-35065…	45	65	70.4	100NHG000B NZMC1-S100	LPJ-100SP	DILM80	DX-LN3-080
DA1-35078…	55	78	90.6	125NHG00B NZMC2-S125	LPJ-125SP	DILM95	DX-LN3-100
DA1-35105…	75	105	121.1	160NHG00B NZMC2-S160	LPJ-150SP	DILM95	DX-LN3-120
DA1-35130…	90	130	143.2	160NHG00B NZMC2-S160	LPJ-175SP	DILM115	DX-LN3-160
DA1-35150…	110	150	158.4	200NHG1B NZMC2-S200	LPJ-200-SP	DILM150	DX-LN3-160

Notes

1) Overload cycle for 60 s every 600 s
2) For normal internally and externally ventilated four-pole three-phase asynchronous motors with 1500 rpm at 50 Hz and 1800 rpm at 60 Hz
3) NH fuse used together with TB00-D fuse base
4) LPJ fuse used together with J60060-3 fuse base
5) Optional external radio interference suppression filter for longer motor cable lengths and for use in different EMC environments

Mains connection	**DC link connection**		**Motor feeder**	
	Braking resistance		Motor choke	Sine filter
Radio interference suppression filter (external, 150%)[5)]	10% duty factor (ED)	20% duty factor (ED)	I_H = 150% (CT/I_H, at 50°C)	I_H = 150% (CT/I_H, at 50°C)
–	–	–	DX-LM3-008	SIN-0005-6-0-P
–	DX-BR400-0K4	–	DX-LM3-008	SIN-0005-6-0-P
–	DX-BR200-0K4	DX-BR200-0K8	DX-LM3-008	SIN-0005-6-0-P
–	DX-BR150-0K5	DX-BR150-1K4	DX-LM3-008	SIN-0008-6-0-P
–	DX-BR100-0K8	DX-BR100-1K4	DX-LM3-011	SIN-0014-6-0-P
–	DX-BR100-0K8	DX-BR100-1K6	DX-LM3-016	SIN-0014-6-0-P
–	DX-BR050-3K1	DX-BR050-5K1	DX-LM3-035	SIN-0023-6-0-P
–	DX-BR040-3K1	DX-BR040-5K1	DX-LM3-035	SIN-0035-6-0-P
–	DX-BR040-3K1	DX-BR040-5K1	DX-LM3-035	SIN-0035-6-0-P
–	DX-BR022-3K1	DX-BR022-5K1	DX-LM3-035	SIN-0052-6-0-P
–	DX-BR022-3K1	DX-BR022-5K1	DX-LM3-050	SIN-0052-6-0-P
–	DX-BR022-3K1	DX-BR022-5K1	DX-LM3-063	SIN-0085-6-0-P
–	DX-BR012-3K1	DX-BR012-5K1	DX-LM3-080	SIN-0085-6-0-P
–	DX-BR012-3K1	DX-BR012-5K1	DX-LM3-080	SIN-0085-6-0-P
–	DX-BR012-3K1	DX-BR012-5K1	DX-LM3-150	SIN-0122-6-0-P
–	DX-BR012-3K1	DX-BR012-9K2	DX-LM3-150	SIN-0185-6-0-P
–	DX-BR012-3K1	DX-BR012-18K1	DX-LM3-150	SIN-0185-6-0-P

Technical specifications

	Symbol	Unit	Value
General			
Standards			EMC: EN 61800-3:2004+A1-2012 Radio interference: EN 55011: 2010 Security: EN 61800-5: 2007 Degree of protection: EN 60529: 1992
Certifications and manufacturer's declarations on conformity			CE, UL, cUL, c-Tick, UkrSEPRO, Gost-R
Production quality			RoHS, ISO 9001
Climatic proofing	ρw	%	< 95%, average relative humidity (RH), non-condensing (EN 50178)
Ambient temperature			
Operation			
IP20 (NEMA 0)	ϑ	°C	-10 - +50 (frost-free and condensation-free)
IP55 (NEMA 3)	ϑ	°C	-10 - +40, with derating of 1.5% per °C above 40°C on rated operational current I_e **Notes** Operation within a temperature range of 40 to 50°C does not conform to UL listing.
IP66 (NEMA 4X)	ϑ	°C	-10 - +40, with derating of 2.5% per °C above 40°C on rated operational current I_e **Notes** Operation within a temperature range of 40 to 50°C does not conform to UL listing.
Storage	ϑ	°C	-40 - +60
$MTTF_d$		Years	4525
mtbf (mean time between two failures)		Years	50
PFH_D			1.23 - 09 1/h (0.12% of SIL)
Electrostatic discharge (ESD, EN 61000-4-2:2009	U	kV	±4, contact discharge ±8, air discharge
Fast transient burst (EFT/B, EN 61000-4-4: 2004)	U	kV	±1, at 5 kHz, control signal terminal ±2, at 5 kHz, motor connection terminals, Single-phase mains connection terminals ±4, at 5 kHz, three-phase mains connection terminals
Overvoltage (surge, EN 61000-4-5: 2006)			
110 - 115 V, 200 - 240 V	U	kV	±1, phase to phase/neutral conductor ±2, phase/neutral conductor to earth
380 - 480 V, 500 - 600 V	U	kV	±2, phase to phase ±4, phase to earth
Electric strength (flash, EN 61800-5-1: 2007)			
110 - 115 V, 200 - 240 V	U	kV	1.5
380 - 480 V, 500 - 600 V	U	kV	2.5
Radio interference class (EMC)			
Category and maximum screened motor cable length with integrated radio interference suppression filter			
C1	l	m	1
C2	l	m	5
C3	l	m	25
Mounting position			vertical
Altitude	h	m	0 - 1000 above sea level, > 1000 with 1% load current reduction every 100 m, maximum 2000 with UL approval, maximum 4000 without UL approval
Protection type			IP20 (NEMA 0) IP55 (NEMA 3) IP66 (NEMA 4X)
Fan (built-in)			Yes
Protection against contact			BGV A3 (VBG4, finger- and back-of-hand proof)

	Symbol	Unit	Value
Main circuit / power section			
Feeder			
Rated operating voltage			
DA1-12…	U_e	V	1~ 230 (200 V -10% - 240 V +10%)
DA1-32…	U_e	V	3~ 230 (200 V -10% - 240 V +10%)
DA1-34…	U_e	V	3~ 400 (380 V -10% - 480 V +10%)
DA1-35…	U_e	V	3~ 575 (500 V - 10% - 600 V +10%)
Mains frequency	f	Hz	50/60 ±10%
Phase Imbalance		%	max. 3
Maximum short-circuit current (supply voltage)	SCCR	kA	100 (according to IEC 60439-1)
Mains switch-on frequency			Maximum of one time every 30 seconds
Mains network configuration (AC supply system)			TN and TT network with directly earthed neutral point. IT earthing systems with PCM insulation monitoring relays only. Operation on phase-earthed networks is only permissible up to a maximum phase-earth voltage of 300 V AC.
Motor feeder			
Output voltage			
DA1-12…, DA1-32…, DA1-34…, DA1-35…	U_2	V	3~ 0 - U_e
Assigned motor output			
at 230 V, 50 Hz	P	kW	0.75 - 75
at 400 V, 50 Hz	P	kW	0.75 - 250
at 500 V, 60 Hz	P	kW	0.75 - 110
Output Frequency			
Range, parameterizable	f_2	Hz	0 - 50/60 (max. 500 Hz)
Resolution	Δf	Hz	0.1
Rated operational current	I_e	A	IP20: 4.3- 72/370 - 450 IP55: 24 -302 IP66: 4.3 -18
Overload current for 60 s every 600 s	I_L	%	150
Starting current for 4 s every 40 s	I_L	%	200
Motor cable length			
screened	l	m	100
unscreened	l	m	150
with motor choke	Δl	%	100 (increased maximum cable length)
Switching frequency (pulse frequency)	f_{PWM}	kHz	4 - 32 (double modulation) / 2 - 16 (effective) Maximum value depends on rating
Operating mode			V/Hz control, slip compensation, vector control
SLV, max. speed error	Δn	%	±0.5
DC-braking			
Time before start	t	s	0 - 25, in the event of a stop
Motor pick-up control function (for catching spinning motors)			Yes
Brake chopper			Yes
Braking current during continuous operation	I_{BR}	%	100 (I_e)
Maximum braking current	I_{BRmax}	%	150 for 60 s

2.4 Variable frequency drive DA1 to 160 kW

General rated operational data

	Symbol	Unit	Value
Control section			
Terminal capacity (clampable)	A	mm^2	0.05 - 2.5 (30 - 12 AWG)
Control voltage			
Output voltage (control signal terminal 1)	U_c	V DC	24
Input voltage (control signal terminal 1)	U_c	V DC	18 - 30
Load rating (control signal terminal 1), maximum	I	mA	100
Reference voltage (control signal terminal 5)	U_S	V DC	10
Load rating (control signal terminal 5), maximum	I	mA	10
Digital Input (DI)			
Number (configurable)			3 - 5
Logic (level)			Increase
Time of reaction	t	ms	< 4
Input voltage range High (1)	U_c	V DC	8 - 30
Input voltage range Low (0)	U_c	V DC	0 - 4
Analog Input (AI)			
Number (configurable)			0 - 2
Resolution			12 bits
Accuracy		%	< 1 to the final value
Time of reaction	t	ms	< 4
Input voltage range	U_{Ref}	V	0/-10 - +10, DC (R_i ~ 72 kΩ)
Input current range	I	mA	0/4 - 20 (RB ~ 500 Ω)
Setpoint potentiometer (recommended fixed resistance)	R	kΩ	1 -10
Relay output (K)			
Number of relays (contacts)			2 (1 N/O/1 changeover contact)
Switching capacity			
AC	I	A	6 (250 V)
DC	I	A	5 (30 V)
Digital/analog output (DO/AO)			
Qty.			2 (digital/analogue)
Output voltage			
TH	U_{out}	V DC	+24
AO	U_{out}	V DC	0/-10 - +10
Current carrying capacity DO	I_{out}	mA	< 20
AO resolution			12 bits
Interface (RJ45)			OP bus, Modbus RTU, CANopen, (RS485)
STO (Safe Torque Off)			
Voltage	U	V DC	+24 (18 - 30)
Current	I	mA	100
SIL category			2
PL			d

Size		Symbol	Unit	4D3	7D0	011
DA1-12… series						
Rated operational current		I_e	A	4.3	7.0	10.5
Overload current for 60 s every 600 s		I_L	A	6.45	10.5	15.75
Apparent power at rated operation	230 V	S	kVA	1.71	2.79	4.18
	240 V	S	kVA	1.79	2.91	4.36
Assigned motor power	230 V	P	kW	0.75	1.5	2.2
	230 V	P	HP	1	2	3
Power side (primary side):						
Number of phases				single-phase or two-phase		
Device Voltage Rating		U_{LN}	V	200 - 10% - 240 + 10%, 50/60 Hz (180 - 264 ±0%, 48 - 62 Hz ±0%)		
Input current (phase current)		I_{LN}	A	8.5	15.2	19.5
Minimum braking resistance		R_B	Ω	100	50	35
Switching frequency (pulse frequency)						
Default settings		f_{PWM}	kHz	16	16	16
Setting range		f_{PWM}	kHz	4 - 32	4 - 32	4 - 32
Maximum leakage current to earth (PE), without motor		I_{PE}	mA	2.49	2.49	2.49
Efficiency		η		0.94	0.96	0.95
Heat dissipation at I_e		P_V	W	45.75	63	103.4
Frame size				FS2	FS2	FS2

Size		Symbol	Unit	4D3	7D0	011	018	024	024
DA1-32… series									
Rated operational current		I_e	A	4.3	7.0	10.5	18	24	24
Overload current for 60 s every 600 s		I_L	A	6.45	10.5	15.75	27	36	36
Apparent power at rated operation	230 V	S	kVA	1.71	2.79	4.18	7.17	9.56	9.56
	240 V	S	kVA	1.79	2.91	4.36	7.48	9.98	9.98
Assigned Instance Motor Power	230 V	P	kW	0.75	1.5	2.2	4.0	5.5	5.5
	230 V	P	HP	1	2	3	5	7.5	7.5
Power side (primary side):									
Number of phases				three-phase					
Rated operating voltage		U_{LN}	V	200 - 10% - 240 +10%, 50/60 Hz (180 - 264 ±0%, 48 - 62 Hz ±0%)					
Input current (phase current)		I_{LN}	A	5.1	8.3	12.6	21.6	29.1	29.1
Minimum braking resistance		R_B	Ω	100	50	35	20	20	20
Switching frequency (pulse frequency)									
Default settings		f_{PWM}	kHz	16	16	16	16	16	16
Setting range		f_{PWM}	kHz	4 - 32	4 - 32	4 - 32	4 - 32	4 -16	4 - 16
Maximum leakage current to earth (PE), without motor		I_{PE}	mA	1.73	1.73	1.73	0.93	0.93	1.42
Efficiency		η		0.95	0.96	0.96	0.96	0.97	0.97
Heat dissipation at I_e		P_V	W	39.75	61.5	90.2	160	170.5	170.5
Frame size				FS2	FS2	FS2	FS3	FS3	FS4

2.4 Variable frequency drive DA1 to 160 kW

Specific rated operational data

Size		Symbol	Unit	030	046	061	072	090	110
DA1-32… series									
Rated operational current		I_e	A	30	46	61	72	90	110
Overload current for 60 s every 600 s at 50°C		I_L	A	58.5	69	91.5	108	135	165
Apparent power at rated operation	230 V	S	kVA	15.5	18.3	24.3	28.7	35.9	43.8
	240 V	S	kVA	16.2	19.1	25.4	29.9	37.4	45.7
Assigned Instance Motor Power	230 V	P	kW	7.5	11	15	18.5	22	30
	230 V	P	HP	10	15	20	25	30	40
Power side (primary side):									
Number of phases				three-phase					
Rated operating voltage		U_{LN}	V	200 V (-10%) - 240 V (+10%), 50/60 Hz (180 - 264 V ±0%, 48 - 62 Hz ±0%)					
Input current (phase current)		I_{LN}	A	36.4	55.8	70.2	82.9	103.6	126.7
Minimum braking resistance		R_B	Ω	22	22	12	12	6	6
Switching frequency									
Default settings		f_{PWM}	kHz	8	8	8	8	8	4
Setting range		f_{PWM}	kHz	4 - 24	4 - 24	4 - 24	4 - 24	4 -24	4 - 16
Maximum leakage current to earth (PE), without motor		IPE	mA	1.42	1.42	0.28	0.28	1.54	1.54
Efficiency		η		0.97 (IP55) 0.96 (IP20)	0.97	0.97	0.97	0.97	0.97
Heat dissipation at I_e		P_V	W	187.5 (IP55) 410 (IP20)	264	345	518	550	720
Frame size				FS4	FS4	FS5	FS5	FS6	FS6

Size		Symbol	Unit	150	180	202	248
DA1-32… series							
Rated operational current		I_e	A	150	180	202	248
Overload current for 60 s every 600 s		I_L	A	225	270	303	372
Apparent power at rated operation	230 V	S	kVA	59.8	71.7	80.5	98.8
	240 V	S	kVA	62.4	74.8	84	103.1
Assigned Instance Motor Power	230 V	P	kW	37	45	55	75
	230 V	P	HP	50	60	75	100
Power side (primary side):							
Number of phases				three-phase			
Rated operating voltage		U_{LN}	V	200 V (-10%) - 240 V (+10%), 50/60 Hz (180 - 264 V ±0%, 48 - 62 Hz ±0%)			
Input current (phase current)		I_{LN}	A	172.7	183.3	205.7	255.5
Minimum braking resistance		R_B	Ω	6	6	6	6
Switching frequency (pulse frequency)							
Default settings		f_{PWM}	kHz	4	4	4	4
Setting range		f_{PWM}	kHz	4 - 12	4 - 8	4 - 16	4 - 12
Maximum leakage current to earth (PE), without motor		I_{PE}	mA	1.54	1.54	2.74	2.74
Efficiency		η		0.97	0.98	0.98	0.98
Heat dissipation at I_e		P_V	W	814	945	1100	1425
Frame size				FS6	FS6	FS7	FS7

Size		Symbol	Unit	2D2	4D1	5D8	9D5	014	018	024
DA1-34… series										
Rated operational current		I_e	A	2.2	4.1	5.8	9.5	14	18	24
Overload current for 60 s every 600 s		I_L	A	3.3	6.15	8.7	14.25	21	27	36
Apparent power at rated operation	400 V	S	kVA	1.52	2.84	4.02	6.58	9.7	12.5	16.6
	480 V	S	kVA	1.83	3.41	4.8	7.9	11.6	15	20
Assigned Instance Motor Power	400 V	P	kW	0.75	1.5	2.2	4.0	5.5	7.5	11
	460 V	P	HP	1	2	3	5	7.5	10	15
Power side (primary side):										
Number of phases				three-phase						
Rated operating voltage		U_{LN}	V	380 V (-10%) - 480 V (+10%), 50/60 Hz (342 - 528 V ±0%, 48 - 62 Hz ±0%)						
Input current (phase current)		I_{LN}	A	2.4	5.1	7.5	11.2	19	22	28.9
Minimum braking resistance		R_B	Ω	400	200	150	100	75	50	40
Switching frequency (pulse frequency)										
Default settings		f_{PWM}	kHz	8	8	8	8	8	8	8
Setting range		f_{PWM}	kHz	4 - 32	4 - 32	4 - 32	4 - 32	4 -24	4 - 24	4 - 16
Maximum leakage current to earth (PE), without motor		I_{PE}	mA	4.65	4.65	4.65	4.65	1.55	1.55	1.55
Efficiency		η		0.92	0.95	0.95	0.96	0.96	0.97	0.97
Heat dissipation at I_e		P_V	W	63.75	76.5	101.2	136	209	300	297
Frame size				FS2	FS2	FS2	FS2	FS3	FS3	FS3

Size		Symbol	Unit	024	030	039	046	061	072	090
DA1-34… series										
Rated operational current		I_e	A	24	30	39	46	61	72	90
Overload current for 60 s every 600 s		I_L	A	36	45	58.5	69	91.5	108	135
Apparent power at rated operation	400 V	S	kVA	16.6	20.8	27	31.9	42.3	49.9	62.4
	480 V	S	kVA	20	24.9	32.4	38.2	50.7	59.9	74.8
Assigned Instance Motor Power	400 V	P	kW	11	15	18.5	22	30	37	45
	460 V	P	HP	15	20	25	30	40	50	60
Power side (primary side):										
Number of phases					three-phase					
Rated operating voltage		U_{LN}	V		380 V (-10%) - 480 V (+10%), 50/60 Hz (342 - 528 V ±0%, 48 - 62 Hz ±0%)					
Input current (phase current)		I_{LN}	A	28.9	37.2	47	52.4	66.1	77.3	92.2
Minimum braking resistance		R_B	Ω	40	22	22	22	12	12	6
Switching frequency (pulse frequency)										
Default settings		f_{PWM}	kHz	8	8	8	8	8	8	4
Setting range		f_{PWM}	kHz	4 - 16	4 - 24	4 - 24	4 - 24	4 - 24	4 -24	4 - 16
Maximum leakage current to earth (PE), without motor		I_{PE}	mA	2.47	2.47	2.47	2.47	0.49	0.49	2.68
Efficiency		η		0.97	0.97	0.97	0.97	0.97	0.97	0.97
Heat dissipation at I_e		P_V	W	297	375	444	506	840	925	1080
Frame size				FS4	FS4	FS4	FS4	FS5	FS5	FS6

2.4 Variable frequency drive DA1 to 160 kW

Specific rated operational data

Size		Symbol	Unit	110	150	180	202	240	302
DA1-34… series									
Rated operational current		I_e	A	110	150	180	202	240	302
Overload current for 60 s every 600 s		I_L	A	165	225	270	303	360	453
Apparent power at rated operation	400 V	S	kVA	76.2	104	125	140	166	209
	480 V	S	kVA	91.5	125	150	168	200	251
Assigned Instance Motor Power	400 V	P	kW	55	75	90	110	132	160
	460 V	P	HP	75	120	150	175	200	250
Power side (primary side):									
Number of phases				three-phase					
Rated operating voltage		U_{LN}	V	380 V (-10%) - 480 V (+10%), 50/60 Hz (342 - 528 V ±0%, 48 - 62 Hz ±0%)					
Input current (phase current)		I_{LN}	A	112.5	153.2	183.7	217	256	302
Minimum braking resistance		R_B	Ω	6	6	6	6	6	6
Switching frequency (pulse frequency)									
Default settings		f_{PWM}	kHz	4	4	4	4	4	4
Setting range		f_{PWM}	kHz	4 - 16	4 - 12	4 - 8	4 - 16	4 - 12	4 - 8
Maximum leakage current to earth (PE), without motor		I_{PE}	mA	2.68	2.68	2.68	4.75	4.75	4.75
Efficiency		η		0.98	0.98	0.98	0.98	0.98	0.98
Heat dissipation at I_e		P_V	W	1210	1575	1800	2090	2375	3040
Frame size				FS6	FS6	FS6	FS7	FS7	FS7

Size		Symbol	Unit	2D1	3D1	4D1	6D5	9D0	012
DA1-35… series									
Rated operational current		I_e	A	2.1	3.1	4.1	6.5	9	12
Overload current for 60 s every 600 s at 50°C		I_L	A	3.15	4.65	6.15	9.75	13.5	18
Apparent power at rated operation	500 V	S	kVA	1.6	2.1	2.4	4.3	6	7.5
	600 V	S	kVA	2	2.5	2.9	5.1	7.3	9
Assigned Instance Motor Power	500 V	P	kW	0.75	1.5	2.2	4	5.5	7.5
	575 V	P	HP	1	2	3	5	7.5	10
Power side (primary side):									
Number of phases				three-phase					
Rated operating voltage		U_{LN}	V	500 V (-10%) - 600 V (+10%), 50/60 Hz					
Input current (phase current)		I_{LN}	A	2.5	3.7	4.9	7.8	10.8	14.4
Minimum braking resistance		R_B	Ω	50	50	50	50	50	40
Switching frequency (pulse frequency)									
Default settings		f_{PWM}	kHz	8	8	8	8	8	8
Setting range		f_{PWM}	kHz	4 - 24	4 - 24	4 - 24	4 - 24	4 - 24	4 - 24
Maximum leakage current to earth (PE), without motor		I_{PE}	mA	–	–	–	–	–	–
Efficiency		η		0.97	0.97	0.97	0.97	0.97	0.97
Heat dissipation at I_e		P_V	W	22.5	45	66	120	165	225
Frame size				FS2	FS2	FS2	FS2	FS2	FS3

Size		Symbol	Unit	017	022	022	028	034	043
DA1-35… series									
Rated operational current		I_e	A	17	22	22	28	34	43
Overload current for 60 s every 600 s		I_L	A	25.5	33	33	42	51	64.5
Apparent power at rated operation	500 V	S	kVA	10.4	12.7	12.7	16	19.5	24.4
	600 V	S	kVA	12.5	15.2	15.5	19.3	23.4	29.3
Assigned Instance Motor Power	500 V	P	kW	11	15	15	18.5	22	30
	575 V	P	HP	15	20	20	25	30	40
Power side (primary side):									
Number of phases				three-phase					
Rated operating voltage		U_{LN}	V	500 V (-10%) - 600 V (+10%), 50/60 Hz					
Input current (phase current)		I_{LN}	A	20.6	26.7	26.7	34	41.2	53
Minimum braking resistance		R_B	Ω	40	40	22	22	22	22
Switching frequency (pulse frequency)									
Default settings		f_{PWM}	kHz	8	8	8	8	8	8
Setting range		f_{PWM}	kHz	24	24	24	24	24	24
Maximum leakage current to earth (PE), without motor		I_{PE}	mA	–	–	–	–	–	–
Efficiency		η		0.97	0.97	0.97	0.97	0.97	0.97
Heat dissipation at I_e		P_V	W	330	450	450	555	660	850
Frame size				FS3	FS3	FS4	FS4	FS4	FS4

Size		Symbol	Unit	054	065	078	105	130	150
DA1-35… series									
Rated operational current		I_e	A	54	65	78	105	130	150
Overload current for 60 s every 600 s		I_L	A	81	97.5	117	157.5	195	225
Apparent power at rated operation	500 V	S	kVA	29.7	35.2	45.2	60.5	71.5	79.1
	600 V	S	kVA	35.6	42.2	54.3	72.6	85.9	95
Assigned Instance Motor Power	500 V	P	kW	37	45	55	75	90	110
	575 V	P	HP	50	60	75	100	125	150
Power side (primary side):									
Number of phases				three-phase					
Rated operating voltage		U_{LN}	V	500 V (-10%) - 600 V (+10%), 50/60 Hz					
Input current (phase current)		I_{LN}	A	62.2	75.8	90.9	108.2	162	187
Minimum braking resistance		R_B	Ω	12	12	6	6	6	6
Switching frequency (pulse frequency)									
Default settings		f_{PWM}	kHz	8	8	4	4	4	4
Setting range		f_{PWM}	kHz	4 - 24	4 - 24	4 -16	4 - 16	4 - 12	4 - 12
Maximum leakage current to earth (PE), without motor		I_{PE}	mA	–	–	–	–	–	–
Efficiency		η		0.97	0.97	0.97	0.97	0.97	0.97
Heat dissipation at I_e		P_V	W	1110	1350	1650	2250	2700	3300
Frame size				FS5	FS5	FS6	FS6	FS6	FS6

Dimensions and weights

Frame sizes FS2, FS3, FS4 and FS5 in IP20

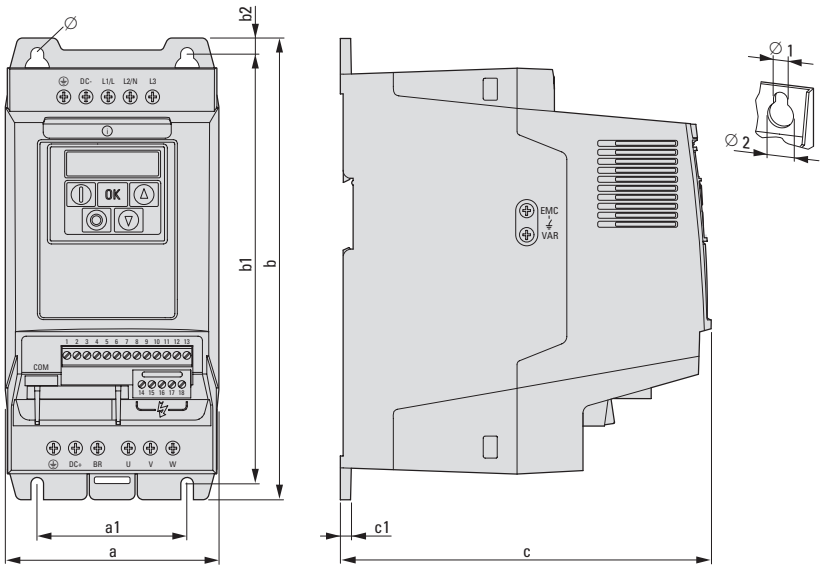

Size	a	a1	b	b1	b2	c	c1	Ø1	Ø2	m
	mm	mm	mm	mm	mm	mm	mm	mm	mm	kg
FS2	107	75	231	215	8	186	5	6.5	12.2	1.8
FS3	131	100	273	255	8.5	204	5	6.5	12.2	3.5
FS4	173	125	419	400	10	241	5	8	15	9.2
FS5	234	175	485	460	13	261	5	8	18	18.2

Frame sizes FS4 to FS7 in IP55

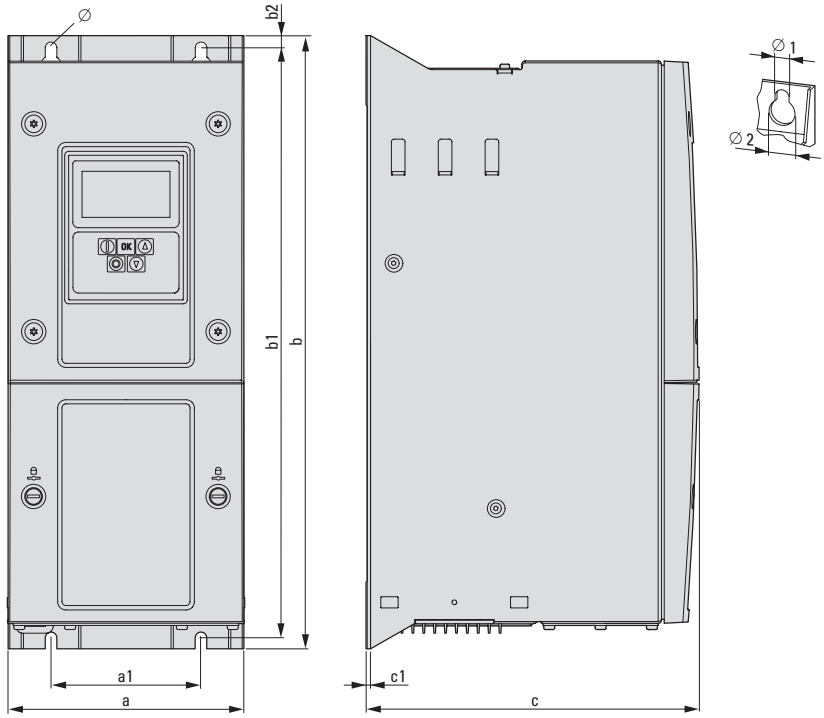

Frame size	a	a1	b	b1	b2	c	c1	Ø1	Ø2	m
	mm	mm	mm	mm	mm	mm	mm	mm	mm	kg
FS4	171	110	450	433	9	240	2	8	15	11.5
FS5	235	175	540	520	12	270	2	8	15	22.5
FS6	330	200	865	840	15	313.5	2	11	22	50
FS7	330	200	1280	1255	15	341	2	11	22	80

Frame sizes FS2, FS3 and FS4 in IP66

FS2

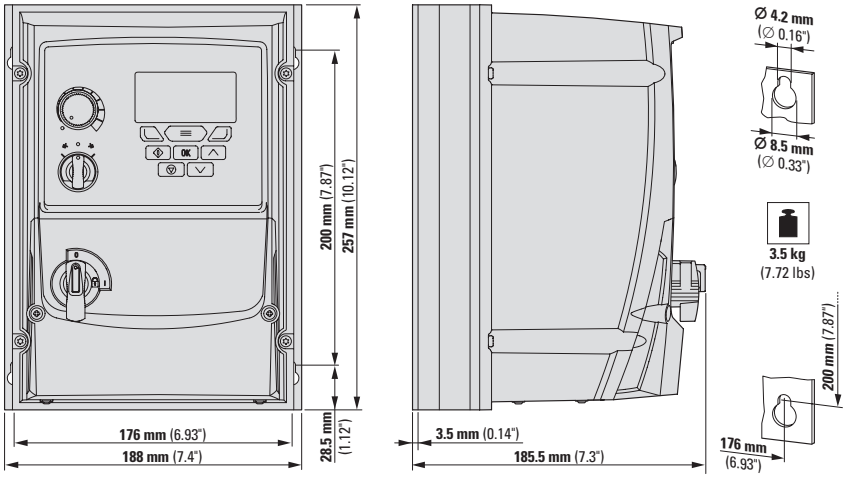

FS3

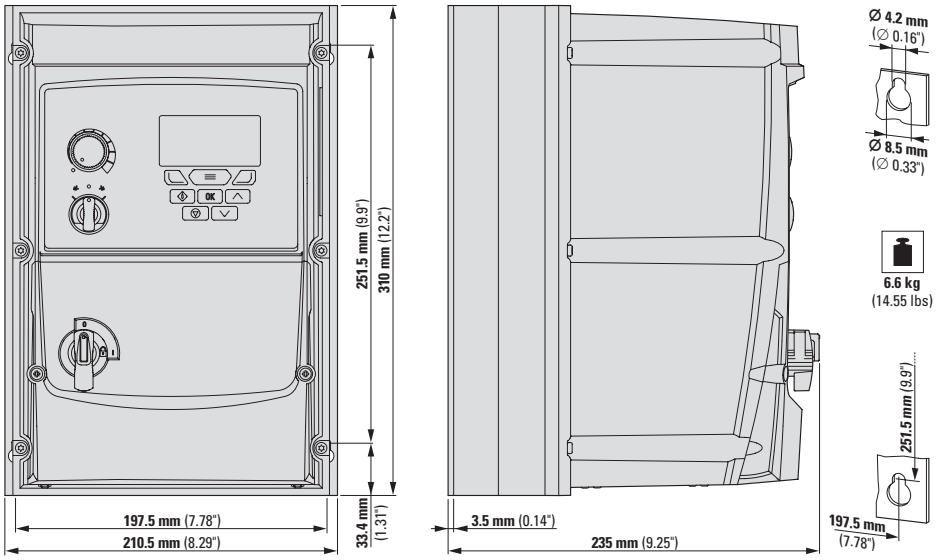

FS4

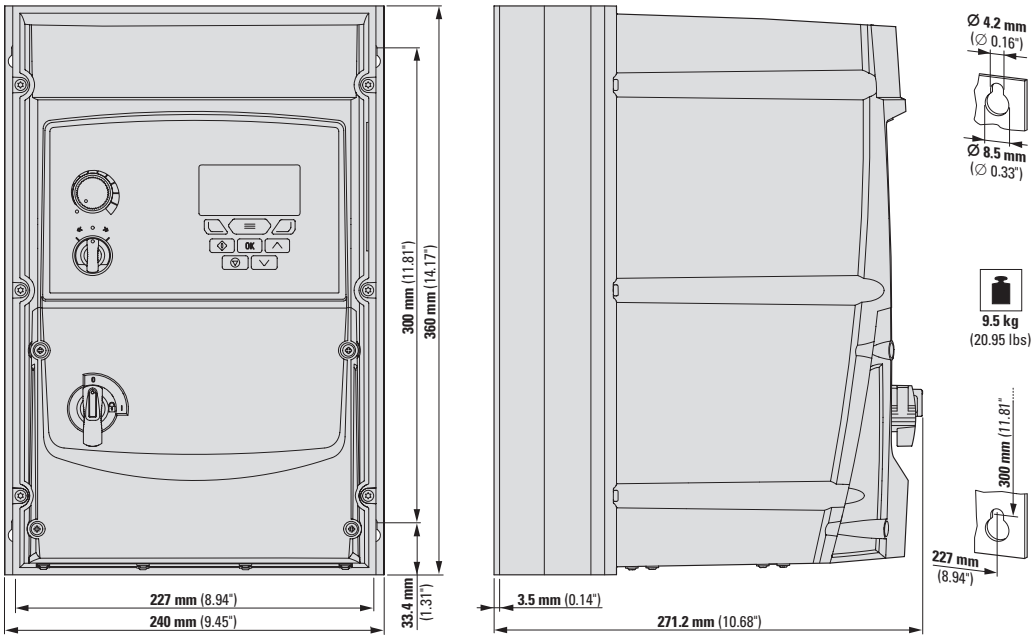



PowerXL Variable Frequency Drive DM1 and DM1Pro General Purpose Drive

PowerXL DM1 variable frequency drives take a high level of functionality and put it in an extremely compact space. They are the perfect choice for applications in which space is at a premium but the full functionality of a standard universal variable frequency drive is still required, with examples including pump functions, HVAC functions, and controlling common motors such as asynchronous motors and permanent magnet motors.

Performance range:

- 0.25 - 1.5 kW (115 V)
- 0.55 - 15 kW (230 V)
- 0.75 - 22 kW (400 V)
- 5 - 25 HP (575 V)

Applications:

- Multi-Pump applications
- Booster Pumps
- Sprinklers
- Supply and exhaust fans
- Chain conveyors, roller and chain conveyors
- Compressors
- Screw conveyors
- Centrifuges
- Sawing & Drilling
- Water jet cutters

Features:

- The integrated web server makes it possible to configure and control devices without having to install additional software.
- PowerXpert inControl can communicate with the DM1 via Bluetooth without having to open the control cabinet.
- For booster pump systems in which multiple pumps run as a group, the DM1 provides all the basic functions for adding and removing pumps to and from the group and for ensuring that all pumps are controlled uniformly
- IP20 degree of protection with optional IP21/NEMA1 kit Ambient temperature as low as -30°C with cold-weather functionality and as high as +50°C (+60°C with derating)
- Integrated energy measurement and energy cost calculator
- No additional upstream devices (such as a mains choke) are required for short-circuit protection up to 100 kA. The short-circuit current that can be reached depends exclusively on the protective device used

Accessory:

- Profinet connection
- Profibus connection
- CANopen connection
- IP21 / NEMA1 Kit
- DG1-Remote Keypad

For more information, visit:
www.Eaton.com/DM1



2.5 Variable frequency drive DM1 to 22 kW

System overview **158**
Key to type references **159**
Ordering **160**
DM1 for three-phase motors 230 V, three-phase **160**
DM1 for three-phase motors 400 V, three-phase **161**
DM1Pro for three-phase motors 115 V/230 V, single-phase **162**
DM1Pro for three-phase motors 230 V, three-phase **163**
DM1Pro for three-phase motors 400 V, three-phase **164**
DM1Pro for three-phase motors, 575 V, three-phase, DM1 and DM1Pro options . **165**
Engineering **166**
DM1 External components **166**
Connection examples **178**
Technical data **179**
Dimensions **181**

System overview

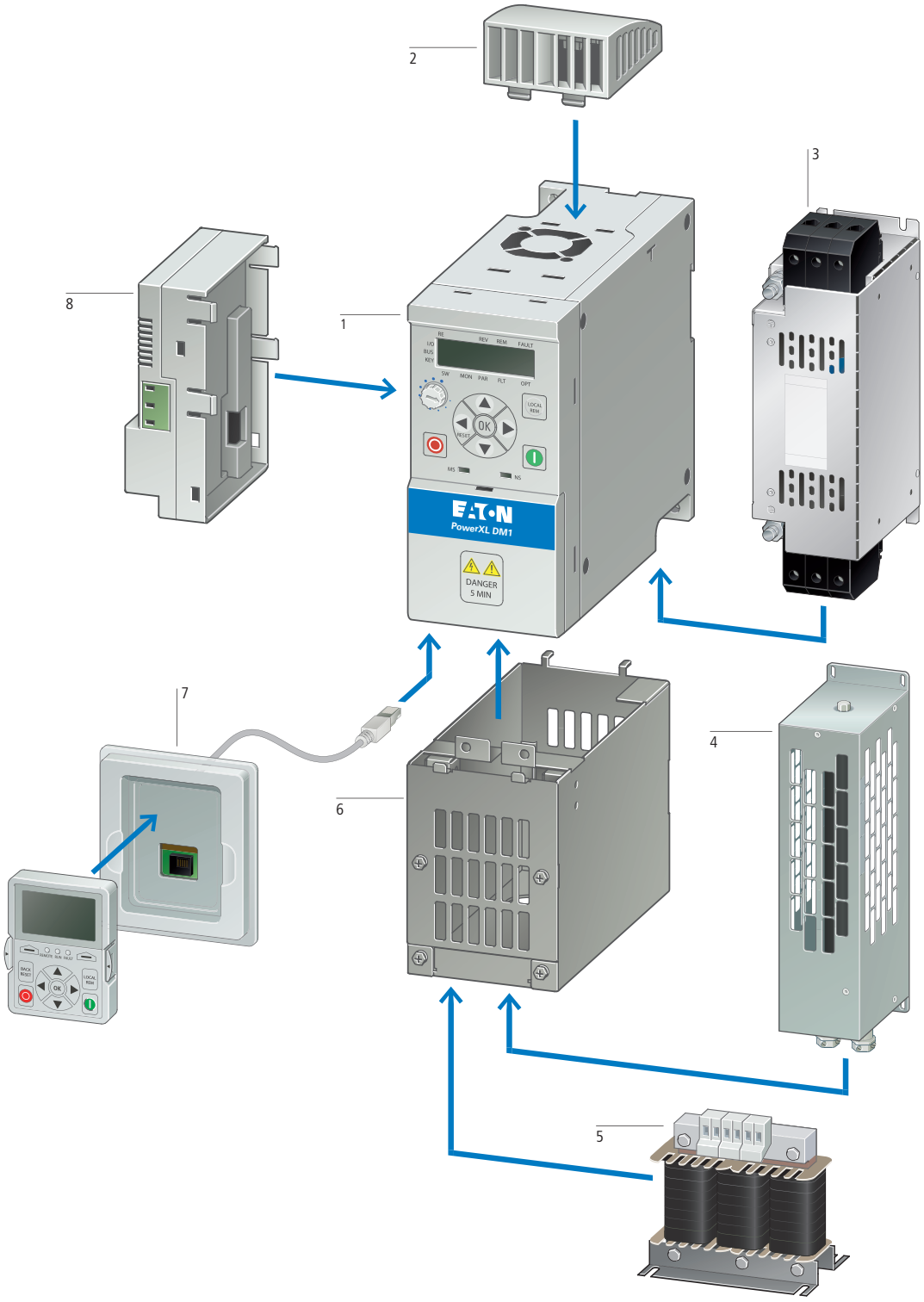

DM1 / DM1 Pro 1
→ Page 160

NEMA1 / IP21 Kits DXM-ACC... 2
→ Page 165

EMC filter DX-EMC... 3
→ Page 217

Braking resistances DX-BR... 4
→ Page 222

Net-/motor chokes DX-LN…/DX-LM…, DX-PHF… harmonic filters 5
→ Page 215
→ Page 216
→ Page 219

NEMA1 kits DXM-ACC-FRxN1... 6
→ Page 165

Remote Keypad Kit DXG-KEY-RMTKIT 7
→ Page 165

Communication Cards DXM-NET... 8
→ Page 165

Key to type references

DM1 - 3 4 4D3 E B - S 20 S - EM

Device series
DM = variable frequency drives

Connection in power section
1 = single-phase mains connection/three-phase motor connection 3 = three-phase mains connection/three-phase motor connection

Mains voltage category (rated value)
1 = 115 V (100 - 120 V +10%/-15%) 2 = 230 V (200 - 240 V +10%/-15%) 4 = 400 V (380 - 480 V +10%/-15%) 5 = 575 V (525 - 600 V +10%/-15%)

Sizes
FR1
FR2
FR3
FR4

1~, 100 - 120 V
1D6 = 1.6 A, 0.25 / 0.55 kW, 0.25 / 0.5 HP
3D0 = 3 A, 0.55 / 1.1 kW, 0.5 / 1 HP
4D8 = 4.8 A, 1.1 / 1.5 kW, 1 / 2 HP
6D9 = 6.9 A, 1.5 / 1.5 kW, 2 / 2 HP

1~, 200 - 240 V
1D6 = 1.6 A, 0.25 / 0.55 kW, 0.25 / 0.5 HP
3D0 = 3 A, 0.55 / 1.1 kW, 0.5 / 1 HP
4D8 = 4.8 A, 1.1 / 1.5 kW, 1 / 2 HP
7D8 = 7.8 A, 1.5 / 2.2 kW, 2 / 3 HP
011 = 11 A, 2.2 / 4 kW, 3 / 5 HP
017 = 17.5 A, 4 / 5.5 kW, 5 / 7.5 HP

3~, 525 - 600 V
4D5 = 4.5 A, 2.2 / 4 kW, 3 / 5 HP
7D5 = 7.5 A, 4 / 5.5 kW, 5 / 7.5 HP
010 = 10 A, 5.5 / 7.5 kW, 7.5 / 10 HP
013 = 13.5 A, 7.5 / 11 kW, 10 / 15 HP
018 = 18 A, 11 / 15 kW, 15 / 20 HP
022 = 22 A, 15 / 18.5 kW, 20 / 25 HP

3~, 200 - 240 V
1D6 = 1.6 A, 0.25 / 0.55 kW, 0.25 / 0.5 HP
3D0 = 3 A, 0.55 / 1.1 kW, 0.5 / 1 HP
4D8 = 4.8 A, 1.1 / 1.5 kW, 1 / 2 HP
7D8 = 7.8 A, 1.5 / 2.2 kW, 2 / 3 HP
011 = 11 A, 2.2 / 4 kW, 3 / 5 HP
017 = 17.5 A, 4 / 5.5 kW, 5 / 7.5 HP
025 = 25 A, 5.5 / 7.5 kW, 7.5 / 10 HP
032 = 32 A, 7.5 / 11 kW, 10 / 15 HP
048 = 48 A, 11 / 15 kW, 15 / 20 HP

3~, 380 - 480 V
1D5 = 1.5 A, 0.55 / 0.75 kW, 0.5 / 1 HP
2D2 = 2.2 A, 0.75 / 1.5 kW, 1 / 2 HP
4D3 = 4.3 A, 1.5 / 2.2 kW, 2 / 3 HP
5D6 = 5.6 A, 2.2 / 3 kW, 3 / 5 HP
7D6 = 7.6 A, 3 / 5.5 kW, 5 / 7.5 HP
012 = 12 A, 5.5 / 7.5 kW, 7.5 / 10 HP
016 = 16 A, 7.5 / 11 kW, 10 / 15 HP
023 = 23 A, 11 / 15 kW, 15 / 20 HP
031 = 31 A, 15 / 18.5 kW, 20 / 25 HP
038 = 38 A, 18.5 / 22 kW, 25 / 30 HP

Region
empty = US EM = Europe, Middle East and Africa AP = Asia Pacific

Control options
B = No STO, no Ethernet communication, no options S = STO with SIL2 and EtherNet/IP, Modbus TCP on-board, connection for an optional card (DM1 Pro)

Protection type
20 = IP20/NEMA 0

Display unit (display)
N = No display S = Multi-Segment LDC-Display (DM1 Pro)

Brake chopper
N = No brake chopper B = Brake chopper

EMC (radio interference suppression filter)
N = No internal EVM filter E = internal EMC filter

Power specifications are for a 150%/110% Overload cycle. In the case of a 110% Overload cycle, the permissible ambient temperature is reduced to +40°C.

2.5 Variable frequency drive DM1 to 22 kW

DM1 for three-phase motors 230 V, three-phase

Ordering

Rated operation current[1]	Assigned motor output [1) 2) 3)]		Rated operation current [1)]	Assigned motor output [1) 2) 3)]		Configuration			Frame size	Protection type	**Catalog Number** Article no.	Std. pack
I_n = 150% I_e			I_n = 110% I_e			Radio interference suppression filter	Brake chopper	Seven-segment display				
A	kW	HP	A	kW	HP							
U_e 230 V AC, three-phase / U_2 230 V AC, three-phase, without EMC filter												
Mains voltage (50/60Hz) U_{LN}: 200 (-15%) - 240 (+10%) V												
1.6	0.25	0.25	3	0.55	0.5	–	✓	–	FS1	IP20/NEMA0	**DM1-321D6NB-N20B-EM** 3-5018-005A	1 unit
3	0.55	0.5	4.8	1.1	1	–	✓	–			**DM1-323D0NB-N20B-EM** 3-5018-006A	
4.8	1.1	1	7.8	1.5	2	–	✓	–			**DM1-324D8NB-N20B-EM** 3-5018-007A	
7.8	1.5	2	11	2.2	3	–	✓	–			**DM1-327D8NB-N20B-EM** 3-5018-008A	
11	2.2	3	17.5	4	5	–	✓	–	FS2		**DM1-32011NB-N20B-EM** 3-5020-003A	
17.5	4	5	25	5.5	7.5	–	✓	–			**DM1-32017NB-N20B-EM** 3-5020-004A	
25	5.5	7.5	32	7.5	10	–	✓	–	FS3		**DM1-32025NB-N20B-EM** 3-5022-002A	
32	7.5	10	48	11	15	–	✓	–	FS4		**DM1-32032NB-N20B-EM** 3-5024-003A	
48	11	15	61	15	20	–	✓	–			**DM1-32048NB-N20B-EM** 3-5024-004A	
U_e 230 V AC, three-phase / U_2 230 V AC, three-phase, with EMC filter												
Mains voltage (50/60Hz) U_{LN}: 200 (-15%) - 240 (+10%) V												
1.6	0.25	0.25	3	0.55	0.5	✓	✓	–	FS1	IP20/NEMA0	**DM1-321D6EB-N20B-EM** 3-5017-005A	1 unit
3	0.55	0.5	4.8	1.1	1	✓	✓	–			**DM1-323D0EB-N20B-EM** 3-5017-006A	
4.8	1.1	1	7.8	1.5	2	✓	✓	–			**DM1-324D8EB-N20B-EM** 3-5017-007A	
7.8	1.5	2	11	2.2	3	✓	✓	–			**DM1-327D8EB-N20B-EM** 3-5017-008A	
11	2.2	3	17.5	4	5	✓	✓	–	FS2		**DM1-32011EB-N20B-EM** 3-5019-003A	
17.5	4	5	25	5.5	7.5	✓	✓	–			**DM1-32017EB-N20B-EM** 3-5019-004A	
25	5.5	7.5	32	7.5	10	✓	✓	–	FS3		**DM1-32025EB-N20B-EM** 3-5021-002A	
32	7.5	10	48	11	15	✓	✓	–	FS4		**DM1-32032EB-N20B-EM** 3-5023-003A	
48	11	15	61	15	20	✓	✓	–			**DM1-32048EB-N20B-EM** 3-5023-004A	

Notes

[1)] Overload cycle for 60 s every 600 s, 150% at 50°C ambient temperature, 110% at 40°C ambient temperature
[2)] For normal internally and externally ventilated four-pole three-phase asynchronous motors with 1500 rpm at 50 Hz and 1800 rpm at 60 Hz
[3)] At 400 V, 50 Hz/at 480 V, 60 Hz

Rated operation current[1]	Assigned motor output [1) 2) 3)]		Rated operation current [1)]	Assigned motor output [1) 2) 3)]		Configuration			Frame size	Protection type	**Catalog Number** Article no.	Std. pack
I_n = 150% I_e			I_n = 110% I_e			Radio interference suppression filter	Brake chopper	Seven-segment display				
A	kW	HP	A	kW	HP							
U_e 400 V AC, three-phase / U_2 400 V AC, three-phase, without EMC filter												
Mains voltage (50/60Hz) U_{LN}: 380 (-15%) - 500 (+10%) V												
1.5	0.55	0.5	2.2	0.75	1	–	✓	–	FS1	IP20/NEMA0	**DM1-341D5NB-N20B-EM** 3-5026-005A	1 unit
2.2	0.75	1	4.3	1.5	2	–	✓	–			**DM1-342D2NB-N20B-EM** 3-5026-006A	
4.3	1.5	2	5.6	2.2	3	–	✓	–			**DM1-344D3NB-N20B-EM** 3-5026-007A	
5.6	2.2	3	7.6	3	5	–	✓	–			**DM1-345D6NB-N20B-EM** 3-5026-008A	
7.6	3	5	12	5.5	7.5	–	✓	–	FS2		**DM1-347D6NB-N20B-EM** 3-5028-004A	
12	5.5	7.5	16	7.5	10	–	✓	–			**DM1-34012NB-N20B-EM** 3-5028-005A	
16	7.5	10	23	11	15	–	✓	–			**DM1-34016NB-N20B-EM** 3-5028-006A	
23	11	15	31	15	20	–	✓	–	FS3		**DM1-34023NB-N20B-EM** 3-5030-002A	
31	15	20	38	18.5	25	–	✓	–	FS4		**DM1-34031NB-N20B-EM** 3-5032-003A	
38	18.5	25	46	22	30	–	✓	–			**DM1-34038NB-N20B-EM** 3-5032-004A	
U_e 400 V AC, three-phase / U_2 400 V AC, three-phase, with EMC filter												
Mains voltage (50/60Hz) U_{LN}: 380 (-15%) - 500 (+10%) V												
1.5	0.55	0.5	2.2	0.75	1	✓	✓	–	FS1	IP20/NEMA0	**DM1-341D5EB-N20B-EM** 3-5025-005A	1 unit
2.2	0.75	1	4.3	1.5	2	✓	✓	–			**DM1-342D2EB-N20B-EM** 3-5025-006A	
4.3	1.5	2	5.6	2.2	3	✓	✓	–			**DM1-344D3EB-N20B-EM** 3-5025-007A	
5.6	2.2	3	7.6	3	5	✓	✓	–			**DM1-345D6EB-N20B-EM** 3-5025-008A	
7.6	3	5	12	5.5	7.5	✓	✓	–	FS2		**DM1-347D6EB-N20B-EM** 3-5027-004A	
12	5.5	7.5	16	7.5	10	✓	✓	–			**DM1-34012EB-N20B-EM** 3-5027-005A	
16	7.5	10	23	11	15	✓	✓	–			**DM1-34016EB-N20B-EM** 3-5027-006A	
23	11	15	31	15	20	✓	✓	–	FS3		**DM1-34023EB-N20B-EM** 3-5029-002A	
31	15	20	38	18.5	25	✓	✓	–	FS4		**DM1-34031EB-N20B-EM** 3-5031-003A	
38	18.5	25	46	22	30	✓	✓	–			**DM1-34038EB-N20B-EM** 3-5031-004A	

Notes

[1)] Overload cycle for 60 s every 600 s, 150% at 50°C ambient temperature, 110% at 40°C ambient temperature
[2)] For normal internally and externally ventilated four-pole three-phase asynchronous motors with 1500 rpm at 50 Hz and 1800 rpm at 60 Hz
[3)] At 400 V, 50 Hz/at 480 V, 60 Hz

2.5 Variable frequency drive DM1 to 22 kW

DM1Pro for three-phase motors 115 V/230 V, single-phase

Rated operation current[1]	Assigned motor output [1) 2) 3)]		Rated operation current [1)]	Assigned motor output [1) 2) 3)]		Configuration			Frame size	Protection type	**Catalog Number** Article no.	Std. pack
I_n = 150% I_e			I_n = 110% I_e			Radio interference suppression filter	Brake chopper	Seven-segment display				
A	kW	HP	A	kW	HP							
U_e 115 V AC, single-phase / U_2 230 V AC, three-phase, without EMC filter												
Mains voltage (50/60Hz) U_{LN}: 100 (-15%) - 120 (+10%) V												
1.6	0.25	0.25	3	0.55	0.5	–	✓	✓	FS1	IP20/NEMA0	**DM1-111D6NB-S20S-EM** 3-5042-003A	1 unit
3	0.55	0.5	4.8	1.1	1	–	✓	✓			**DM1-113D0NB-S20S-EM** 3-5042-004A	
4.8	1.1	1	6.9	1.5	2	–	✓	✓	FS2		**DM1-114D8NB-S20S-EM** 3-5044-003A	
6.9	1.5	2	7.8	1.5	2	–	✓	✓			**DM1-116D9NB-S20S-EM** 3-5044-004A	
U_e 115 V AC, single-phase / U_2 230 V AC, three-phase, with EMC filter												
Mains voltage (50/60Hz) U_{LN}: 100 (-15%) - 120 (+10%) V												
1.6	0.25	0.25	3	0.55	0.5	✓	✓	✓	FS1	IP20/NEMA0	**DM1-111D6EB-S20S-EM** 3-5041-003A	1 unit
3	0.55	0.5	4.8	1.1	1	✓	✓	✓			**DM1-113D0EB-S20S-EM** 3-5041-004A	
4.8	1.1	1	6.9	1.5	2	✓	✓	✓	FS2		**DM1-114D8EB-S20S-EM** 3-5043-003A	
6.9	1.5	2	7.8	1.5	2	✓	✓	✓			**DM1-116D9EB-S20S-EM** 3-5043-004A	
U_e 230 V AC, single-phase / U_2 230 V AC, three-phase, without EMC filter												
Mains voltage (50/60Hz) U_{LN}: 200 (-15%) - 240 (+10%) V												
1.6	0.25	0.25	3	0.55	0.5	–	✓	✓	FS1	IP20/NEMA0	**DM1-121D6NB-S20S-EM** 3-5046-004A	1 unit
3	0.55	0.5	4.8	1.1	1	–	✓	✓			**DM1-123D0NB-S20S-EM** 3-5046-005A	
4.8	1.1	1	7.8	1.5	2	–	✓	✓			**DM1-124D8NB-S20S-EM** 3-5046-006A	
7.8	1.5	2	11	2.2	3	–	✓	✓	FS2		**DM1-127D8NB-S20S-EM** 3-5048-003A	
11	2.2	3	17.5	4	5	–	✓	✓			**DM1-12011NB-S20S-EM** 3-5048-004A	
17.5	4	5	25	5.5	7.5	–	✓	✓	FS3		**DM1-12017NB-S20S-EM** 3-5050-002A	
U_e 230 V AC, single-phase / U_2 230 V AC, three-phase, with EMC filter												
Mains voltage (50/60Hz) U_{LN}: 200 (-15%) - 240 (+10%) V												
1.6	0.25	0.25	3	0.55	0.5	✓	✓	✓	FS1	IP20/NEMA0	**DM1-121D6EB-S20S-EM** 3-5045-004A	1 unit
3	0.55	0.5	4.8	1.1	1	✓	✓	✓			**DM1-123D0EB-S20S-EM** 3-5045-005A	
4.8	1.1	1	7.8	1.5	2	✓	✓	✓			**DM1-124D8EB-S20S-EM** 3-5045-006A	
7.8	1.5	2	11	2.2	3	✓	✓	✓	FS2		**DM1-127D8EB-S20S-EM** 3-5047-003A	
11	2.2	3	17.5	4	5	✓	✓	✓			**DM1-12011EB-S20S-EM** 3-5047-004A	
17.5	4	5	25	5.5	7.5	✓	✓	✓	FS3		**DM1-12017EB-S20S-EM** 3-5049-002A	

Notes

[1)] Overload cycle for 60 s every 600 s, 150% at 50°C ambient temperature, 110% at 40°C ambient temperature
[2)] For normal internally and externally ventilated four-pole three-phase asynchronous motors with 1500 rpm at 50 Hz and 1800 rpm at 60 Hz
[3)] At 400 V, 50 Hz/at 480 V, 60 Hz

Rated operation current[1]	Assigned motor output [1) 2) 3)]		Rated operation current [1)]	Assigned motor output [1) 2) 3)]		Configuration			Frame size	Protection type	**Catalog Number** Article no.	Std. pack
						Radio interference suppression filter	Brake chopper	Seven-segment display				
I_n = 150% I_e A	kW	HP	I_n = 110% I_e A	kW	HP							
U_e 230 V AC, three-phase / U_2 230 V AC, three-phase, without EMC filter												
Mains voltage (50/60Hz) U_{LN}: 200 (-15%) - 240 (+10%) V												
1.6	0.25	0.25	3	0.55	0.5	–	✓	✓	FS1	IP20/NEMA0	**DM1-321D6NB-S20S-EM** 3-5002-005A	1 unit
3	0.55	0.5	4.8	1.1	1	–	✓	✓			**DM1-323D0NB-S20S-EM** 3-5002-006A	
4.8	1.1	1	7.8	1.5	2	–	✓	✓			**DM1-324D8NB-S20S-EM** 3-5002-007A	
7.8	1.5	2	11	2.2	3	–	✓	✓			**DM1-327D8NB-S20S-EM** 3-5002-008A	
11	2.2	3	17.5	4	5	–	✓	✓	FS2		**DM1-32011NB-S20S-EM** 3-5004-003A	
17.5	4	5	25	5.5	7.5	–	✓	✓			**DM1-32017NB-S20S-EM** 3-5004-004A	
25	5.5	7.5	32	7.5	10	–	✓	✓	FS3		**DM1-32025NB-S20S-EM** 3-5006-002A	
32	7.5	10	48	11	15	–	✓	✓	FS4		**DM1-32032NB-S20S-EM** 3-5008-003A	
48	11	15	61	15	20	–	✓	✓			**DM1-32048NB-S20S-EM** 3-5008-004A	
U_e 230 V AC, three-phase / U_2 230 V AC, three-phase, with EMC filter												
Mains voltage (50/60Hz) U_{LN}: 200 (-15%) - 240 (+10%) V												
1.6	0.25	0.25	3	0.55	0.5	✓	✓	✓	FS1	IP20/NEMA0	**DM1-321D6EB-S20S-EM** 3-5001-005A	1 unit
3	0.55	0.5	4.8	1.1	1	✓	✓	✓			**DM1-323D0EB-S20S-EM** 3-5001-006A	
4.8	1.1	1	7.8	1.5	2	✓	✓	✓			**DM1-324D8EB-S20S-EM** 3-5001-007A	
7.8	1.5	2	11	2.2	3	✓	✓	✓			**DM1-327D8EB-S20S-EM** 3-5001-008A	
11	2.2	3	17.5	4	5	✓	✓	✓	FS2		**DM1-32011EB-S20S-EM** 3-5003-003A	
17.5	4	5	25	5.5	7.5	✓	✓	✓			**DM1-32017EB-S20S-EM** 3-5003-004A	
25	5.5	7.5	32	7.5	10	✓	✓	✓	FS3		**DM1-32025EB-S20S-EM** 3-5005-002A	
32	7.5	10	48	11	15	✓	✓	✓	FS4		**DM1-32032EB-S20S-EM** 3-5007-003A	
48	11	15	61	15	20	✓	✓	✓			**DM1-32048EB-S20S-EM** 3-5007-004A	

Notes

[1)] Overload cycle for 60 s every 600 s, 150% at 50°C ambient temperature, 110% at 40°C ambient temperature

[2)] For normal internally and externally ventilated four-pole three-phase asynchronous motors with 1500 rpm at 50 Hz and 1800 rpm at 60 Hz

[3)] At 400 V, 50 Hz/at 480 V, 60 Hz

DM1Pro for three-phase motors 400 V, three-phase

Rated operation current[1]	Assigned motor output [1) 2) 3)]		Rated operation current [1)]	Assigned motor output [1) 2) 3)]		Configuration			Frame size	Protection type	**Catalog Number** Article no.	Std. pack
						Radio interference suppression filter	Brake chopper	Seven-segment display				
I_n = 150% I_e A	kW	HP	I_n = 110% I_e A	kW	HP							
U_e 400 V AC, three-phase / U_2 400 V AC, three-phase, without EMC filter												
Mains voltage (50/60Hz) U_{LN}: 380 (-15%) - 500 (+10%) V												
1.5	0.55	0.5	2.2	0.75	1	–	✓	✓	FS1	IP20/NEMA0	**DM1-341D5NB-S20S-EM** 3-5010-005A	1 unit
2.2	0.75	1	4.3	1.5	2	–	✓	✓			**DM1-342D2NB-S20S-EM** 3-5010-006A	
4.3	1.5	2	5.6	2.2	3	–	✓	✓			**DM1-344D3NB-S20S-EM** 3-5010-007A	
5.6	2.2	3	7.6	3	5	–	✓	✓			**DM1-345D6NB-S20S-EM** 3-5010-008A	
7.6	3	5	12	5.5	7.5	–	✓	✓	FS2		**DM1-347D6NB-S20S-EM** 3-5012-004A	
12	5.5	7.5	16	7.5	10	–	✓	✓			**DM1-34012NB-S20S-EM** 3-5012-005A	
16	7.5	10	23	11	15	–	✓	✓			**DM1-34016NB-S20S-EM** 3-5012-006A	
23	11	15	31	15	20	–	✓	✓	FS3		**DM1-34023NB-S20S-EM** 3-5014-002A	
31	15	20	38	18.5	25	–	✓	✓	FS4		**DM1-34031NB-S20S-EM** 3-5016-003A	
38	18.5	25	46	22	30	–	✓	✓			**DM1-34038NB-S20S-EM** 3-5016-004A	
U_e 400 V AC, three-phase / U_2 400 V AC, three-phase, with EMC filter												
Mains voltage (50/60Hz) U_{LN}: 380 (-15%) - 500 (+10%) V												
1.5	0.55	0.5	2.2	0.75	1	✓	✓	✓	FS1	IP20/NEMA0	**DM1-341D5EB-S20S-EM** 3-5009-005A	1 unit
2.2	0.75	1	4.3	1.5	2	✓	✓	✓			**DM1-342D2EB-S20S-EM** 3-5009-006A	
4.3	1.5	2	5.6	2.2	3	✓	✓	✓			**DM1-344D3EB-S20S-EM** 3-5009-007A	
5.6	2.2	3	7.6	3	5	✓	✓	✓			**DM1-345D6EB-S20S-EM** 3-5009-008A	
7.6	3	5	12	5.5	7.5	✓	✓	✓	FS2		**DM1-347D6EB-S20S-EM** 3-5011-004A	
12	5.5	7.5	16	7.5	10	✓	✓	✓			**DM1-34012EB-S20S-EM** 3-5011-005A	
16	7.5	10	23	11	15	✓	✓	✓			**DM1-34016EB-S20S-EM** 3-5011-006A	
23	11	15	31	15	20	✓	✓	✓	FS3		**DM1-34023EB-S20S-EM** 3-5013-002A	
31	15	20	38	18.5	25	✓	✓	✓	FS4		**DM1-34031EB-S20S-EM** 3-5015-003A	
38	18.5	25	46	22	30	✓	✓	✓			**DM1-34038EB-S20S-EM** 3-5015-004A	

Notes

[1)] Overload cycle for 60 s every 600 s, 150% at 50°C ambient temperature, 110% at 40°C ambient temperature
[2)] For normal internally and externally ventilated four-pole three-phase asynchronous motors with 1500 rpm at 50 Hz and 1800 rpm at 60 Hz
[3)] At 400 V, 50 Hz/at 480 V, 60 Hz

Rated operation current[1]	Assigned motor output [1) 2) 3)]		Rated operation current [1)]	Assigned motor output [1) 2) 3)]		Configuration			Frame size	Protection type	**Catalog Number** Article no.	Std. pack
I_n = 150% I_e			I_n = 110% I_e			Radio interference suppression filter	Brake chopper	Seven-segment display				
A	kW	HP	A	kW	HP							
U_e 575 V AC, three-phase / U_2 575 V AC, three-phase, without EMC filter												
Mains voltage (50/60Hz) U_{LN}: 525 (-15%) - 600 (+10%) V												
4.5	2.2	3	7.5	4	5	–	✓	✓	FS2	IP20/NEMA0	**DM1-354D5NB-S20S-EM** 3-5051-004A	1 unit
7.5	4	5	10	5.5	7.5	–	✓	✓			**DM1-357D5NB-S20S-EM** 3-5051-005A	
10	5.5	7.5	13.5	7.5	10	–	✓	✓			**DM1-35010NB-S20S-EM** 3-5051-006A	
13.5	7.5	10	18	11	15	–	✓	✓	FS3		**DM1-35013NB-S20S-EM** 3-5052-002A	
18	11	15	22	15	20	–	✓	✓	FS4		**DM1-35018NB-S20S-EM** 3-5053-003A	
22	15	20	27	18.5	25	–	✓	✓			**DM1-35022NB-S20S-EM** 3-5053-004A	
U_e 575 V AC, three-phase / U_2 575 V AC, three-phase, with EMC filter												
Mains voltage (50/60Hz) U_{LN}: 525 (-15%) - 600 (+10%) V												
4.5	2.2	3	7.5	4	5	✓	✓	✓	FS2	IP20/NEMA0	**DM1-354D5EB-S20S-EM** 3-5060-004A	1 unit
7.5	4	5	10	5.5	7.5	✓	✓	✓			**DM1-357D5EB-S20S-EM** 3-5060-005A	
10	5.5	7.5	13.5	7.5	10	✓	✓	✓			**DM1-35010EB-S20S-EM** 3-5060-006A	
13.5	7.5	10	18	11	15	✓	✓	✓	FS3		**DM1-35013EB-S20S-EM** 3-5061-002A	
18	11	15	22	15	20	✓	✓	✓	FS4		**DM1-35018EB-S20S-EM** 3-5062-003A	
22	15	20	27	18.5	25	✓	✓	✓			**DM1-35022EB-S20S-EM** 3-5062-004A	

Notes

[1)] Overload cycle for 60 s every 600 s, 150% at 50°C ambient temperature, 110% at 40°C ambient temperature
[2)] For normal internally and externally ventilated four-pole three-phase asynchronous motors with 1500 rpm at 50 Hz and 1800 rpm at 60 Hz
[3)] At 400 V, 50 Hz/at 480 V, 60 Hz

Options

Description	Length m	For use with	**Catalog Number**	Article no.	Std. pack
IP21 / NEMA1 Kit DM1					
In addition to increasing the degree of protection, the NEMA1 kit also features a cable duct and the option of terminating shielding. Moreover, the ferrite cores can be housed inside this enclosure.					
DM1 FR1 NEMA 1 Kit	3	DM1	**DXM-ACC-FR1N1KIT**	3-5033-001A	1 unit
DM1 FR2 NEMA 1 Kit		DM1	**DXM-ACC-FR2N1KIT**	3-5034-001A	
DM1 FR3 NEMA 1 Kit		DM1	**DXM-ACC-FR3N1KIT**	3-5035-001A	
DM1 FR4 NEMA 1 Kit		DM1	**DXM-ACC-FR4N1KIT**	3-5036-001A	
IP21 / NEMA1 Kit DM1 100kA UL Plenum rating					
DM1 Size 1 Flammwidriges NEMA 1 Kit	3	DM1	**DXM-ACC-FR1N1PKIT**	3-5056-001A	1 unit
DM1 Size 2 Flammwidriges NEMA 1 Kit		DM1	**DXM-ACC-FR2N1PKIT**	3-5057-001A	
DM1 Size 3 Flammwidriges NEMA 1 Kit		DM1	**DXM-ACC-FR3N1PKIT**	3-5058-001A	
DM1 Size 4 Flammwidriges NEMA 1 Kit		DM1	**DXM-ACC-FR4N1PKIT**	3-5059-001A	
DM1Pro network interfaces					
DM1 PROFIBUS option with plug-in enclosure	3	DM1	**DXM-NET-PROFIBUS**	3-5039-001A	1 unit
DM1 CANopen option with plug-in enclosure		DM1	**DXM-NET-CANOPEN**	3-5040-001A	
DM1 PROFINET option with plug-in enclosure		DM1	**DXM-NET-PROFINET**	400004	
DG1, DH1 & DM1 keypad options					
DG1/DH1 Keypad: RMTKIT	3		**DXG-KEY-RMTKIT**	730-32033-00P	1 unit

Engineering

Catalog Number	I_e (150% overload)			I_e (110% overload)		
	Rated operational current	Type 1 coordination	Type 1 coordination	Rated operational current	Type 1 coordination	Type 1 coordination
	A			A		
3~/3~ 230 V without EMC						
DM1-321D6NB-N20B-EM	1.6	PKZM0-1.6	C10G4	3	PKZM0-4	C10G4
DM1-323D0NB-N20B-EM	3	PKZM0-4	C10G10	4.8	PKZM0-6.3	C10G10
DM1-324D8NB-N20B-EM	4.8	PKZM0-6.3	C10G10	7.8	PKZM0-10	C10G10
DM1-327D8NB-N20B-EM	7.8	PKZM0-10	C10G16	11	PKZM0-12	C10G16
DM1-32011NB-N20B-EM	11	PKZM0-12	C10G32	17.5	PKZM0-20	C10G32
DM1-32017NB-N20B-EM	17.5	PKZM0-20	C10G32	25	PKZM0-25	C10G32
DM1-32025NB-N20B-EM	25	PKZM0-25	C14G40	32	PKZM0-32	C14G40
DM1-32032NB-N20B-EM	32	PKZM0-32	C22G63	48	PKZM4-50	C22G63
DM1-32048NB-N20B-EM	48	PKZM4-50	C22G80	61	PKZM4-63	C22G80
3~/3~ 230 V with EMC						
DM1-321D6EB-N20B-EM	1.6	PKZM0-1.6	C10G4	3	PKZM0-4	C10G4
DM1-323D0EB-N20B-EM	3	PKZM0-4	C10G10	4.8	PKZM0-6.3	C10G10
DM1-324D8EB-N20B-EM	4.8	PKZM0-6.3	C10G10	7.8	PKZM0-10	C10G10
DM1-327D8EB-N20B-EM	7.8	PKZM0-10	C10G16	11	PKZM0-12	C10G16
DM1-32011EB-N20B-EM	11	PKZM0-12	C10G32	17.5	PKZM0-20	C10G32
DM1-32017EB-N20B-EM	17.5	PKZM0-20	C10G32	25	PKZM0-25	C10G32
DM1-32025EB-N20B-EM	25	PKZM0-25	C14G40	32	PKZM0-32	C14G40
DM1-32032EB-N20B-EM	32	PKZM0-32	C22G63	48	PKZM4-50	C22G63
DM1-32048EB-N20B-EM	48	PKZM4-50	C22G80	61	PKZM4-63	C22G80
3~/3~ 400 V without EMC						
DM1-341D5NB-N20B-EM	1.5	PKZM0-1.6	C10G4	2.2	PKZM0-2.5	C10G4
DM1-342D2NB-N20B-EM	2.2	PKZM0-2.5	C10G10	4.3	PKZM0-6.3	C10G10
DM1-344D3NB-N20B-EM	4.3	PKZM0-6.3	C10G10	5.6	PKZM0-6.3	C10G10
DM1-345D6NB-N20B-EM	5.6	PKZM0-6.3	C10G10	7.6	PKZM0-10	C10G10
DM1-347D6NB-N20B-EM	7.6	PKZM0-10	C10G16	12	PKZM0-12	C10G16
DM1-34012NB-N20B-EM	12	PKZM0-12	C10G20	16	PKZM0-16	C10G20
DM1-34016NB-N20B-EM	16	PKZM0-16	C10G32	23	PKZM0-25	C10G32
DM1-34023NB-N20B-EM	23	PKZM0-25	C14G40	31	PKZM0-32	C14G40
DM1-34031NB-N20B-EM	31	PKZM0-32	C14G50	38	PKZM4-40	C14G50
DM1-34038NB-N20B-EM	38	PKZM4-40	C22G63	46	PKZM4-50	C22G63
3~/3~ 400 V with EMC						
DM1-341D5EB-N20B-EM	1.5	PKZM0-1.6	C10G4	2.2	PKZM0-2.5	C10G4
DM1-342D2EB-N20B-EM	2.2	PKZM0-2.5	C10G10	4.3	PKZM0-6.3	C10G10
DM1-344D3EB-N20B-EM	4.3	PKZM0-6.3	C10G10	5.6	PKZM0-6.3	C10G10
DM1-345D6EB-N20B-EM	5.6	PKZM0-6.3	C10G10	7.6	PKZM0-10	C10G10
DM1-347D6EB-N20B-EM	7.6	PKZM0-10	C10G16	12	PKZM0-12	C10G16
DM1-34012EB-N20B-EM	12	PKZM0-12	C10G20	16	PKZM0-16	C10G20
DM1-34016EB-N20B-EM	16	PKZM0-16	C10G32	23	PKZM0-25	C10G32
DM1-34023EB-N20B-EM	23	PKZM0-25	C14G40	31	PKZM0-32	C14G40
DM1-34031EB-N20B-EM	31	PKZM0-32	C14G50	38	PKZM4-40	C14G50
DM1-34038EB-N20B-EM	38	PKZM4-40	C22G63	46	PKZM4-50	C22G63

			External brake resistors			
Minimum braking resistance	Inrush Voltage	The number of brake choppers	10.0% ED	20.0% ED	40.0% ED	RCD type
Ω						
36	395	1	DX-BR040-3K1	DX-BR040-3K1	DX-BR040-3K1	FRCdM-25/4/003-G/Bfq
36	395	1	DX-BR040-3K1	DX-BR040-3K1	DX-BR040-3K1	FRCdM-25/4/003-G/Bfq
36	395	1	DX-BR040-3K1	DX-BR040-3K1	DX-BR040-3K1	FRCdM-25/4/003-G/Bfq
36	395	1	DX-BR040-3K1	DX-BR040-3K1	DX-BR040-3K1	FRCdM-25/4/003-G/Bfq
16	395	1	DX-BR022-1K4	DX-BR022-3K1	DX-BR022-3K1	FRCdM-40/4/003-G/Bfq
16	395	1	DX-BR022-1K4	DX-BR022-3K1	DX-BR022-5K1	FRCdM-40/4/003-G/Bfq
12	395	1	DX-BR012-3K1	DX-BR012-3K1	DX-BR012-9K2	FRCdM-40/4/003-G/Bfq
6	395	1	P:3 x DX-BR022-1K4	P:3 x DX-BR022-1K4	P:3 x DX-BR022-3K1	FRCdM-63/4/003-G/Bfq
6	395	1	P:3 x DX-BR022-1K4	P:3 x DX-BR022-3K1	P:3 x DX-BR022-5K1	
36	395	1	DX-BR040-3K1	DX-BR040-3K1	DX-BR040-3K1	FRCdM-25/4/003-G/Bfq
36	395	1	DX-BR040-3K1	DX-BR040-3K1	DX-BR040-3K1	FRCdM-25/4/003-G/Bfq
36	395	1	DX-BR040-3K1	DX-BR040-3K1	DX-BR040-3K1	FRCdM-25/4/003-G/Bfq
36	395	1	DX-BR040-3K1	DX-BR040-3K1	DX-BR040-3K1	FRCdM-25/4/003-G/Bfq
16	395	1	DX-BR022-1K4	DX-BR022-3K1	DX-BR022-3K1	FRCdM-40/4/003-G/Bfq
16	395	1	DX-BR022-1K4	DX-BR022-3K1	DX-BR022-5K1	FRCdM-40/4/003-G/Bfq
12	395	1	DX-BR012-3K1	DX-BR012-3K1	DX-BR012-9K2	FRCdM-40/4/003-G/Bfq
6	395	1	P:3 x DX-BR022-1K4	P:3 x DX-BR022-1K4	P:3 x DX-BR022-3K1	FRCdM-63/4/003-G/Bfq
6	395	1	P:3 x DX-BR022-1K4	P:3 x DX-BR022-3K1	P:3 x DX-BR022-5K1	
105	790	1	R:3 x DX-BR035-1K1	R:3 x DX-BR035-1K1	R:3 x DX-BR035-1K1	FRCdM-25/4/003-G/Bfq
105	790	1	R:3 x DX-BR035-1K1	R:3 x DX-BR035-1K1	R:3 x DX-BR040-3K1	FRCdM-25/4/003-G/Bfq
105	790	1	R:3 x DX-BR035-1K1	R:3 x DX-BR035-1K1	R:3 x DX-BR040-3K1	FRCdM-25/4/003-G/Bfq
105	790	1	R:3 x DX-BR035-1K1	R:3 x DX-BR040-3K1	R:3 x DX-BR040-3K1	FRCdM-25/4/003-G/Bfq
35	790	1	DX-BR035-1K1	DX-BR040-3K1	DX-BR040-5K1	FRCdM-25/4/003-G/Bfq
35	790	1	DX-BR040-3K1	DX-BR040-3K1	DX-BR047-9K2	FRCdM-25/4/003-G/Bfq
35	790	1	DX-BR040-3K1	DX-BR040-5K1	DX-BR047-9K2	FRCdM-40/4/003-G/Bfq
26	790	1	DX-BR040-3K1	DX-BR040-5K1	P2R2: DX-BR047-9K2	FRCdM-40/4/003-G/Bfq
17	790	1	DX-BR022-5K1	DX-BR022-9K2	P:2 x DX-BR047-9K2	FRCdM-63/4/003-G/Bfq
17	790	1	DX-BR022-5K1	DX-BR022-9K2	P:2 x DX-BR047-9K2	FRCdM-63/4/003-G/Bfq
105	790	1	R:3 x DX-BR035-1K1	R:3 x DX-BR035-1K1	R:3 x DX-BR035-1K1	FRCdM-25/4/003-G/Bfq
105	790	1	R:3 x DX-BR035-1K1	R:3 x DX-BR035-1K1	R:3 x DX-BR040-3K1	FRCdM-25/4/003-G/Bfq
105	790	1	R:3 x DX-BR035-1K1	R:3 x DX-BR035-1K1	R:3 x DX-BR040-3K1	FRCdM-25/4/003-G/Bfq
105	790	1	R:3 x DX-BR035-1K1	R:3 x DX-BR040-3K1	R:3 x DX-BR040-3K1	FRCdM-25/4/003-G/Bfq
35	790	1	DX-BR035-1K1	DX-BR040-3K1	DX-BR040-5K1	FRCdM-25/4/003-G/Bfq
35	790	1	DX-BR040-3K1	DX-BR040-3K1	DX-BR047-9K2	FRCdM-25/4/003-G/Bfq
35	790	1	DX-BR040-3K1	DX-BR040-5K1	DX-BR047-9K2	FRCdM-40/4/003-G/Bfq
26	790	1	DX-BR040-3K1	DX-BR040-5K1	P2R2: DX-BR047-9K2	FRCdM-40/4/003-G/Bfq
17	790	1	DX-BR022-5K1	DX-BR022-9K2	P:2 x DX-BR047-9K2	FRCdM-63/4/003-G/Bfq
17	790	1	DX-BR022-5K1	DX-BR022-9K2	P:2 x DX-BR047-9K2	FRCdM-63/4/003-G/Bfq

DM1 External components

Catalog Number	I_e (150% overload)			I_e (110% overload)		
	Rated operational current	Type 1 coordination	Type 1 coordination	Rated operational current	Type 1 coordination	Type 1 coordination
	A			A		
1~ 115 V/3~230 V without EMC						
DM1-111D6NB-S20S-EM	1.6	PKZM0-1.6	C10G10	3	PKZM0-4	C10G10
DM1-113D0NB-S20S-EM	3	PKZM0-4	C10G25	4.8	PKZM0-6.3	C10G25
DM1-114D8NB-S20S-EM	4.8	PKZM0-6.3	C10G32	6.9	PKZM0-10	C10G32
DM1-116D9NB-S20S-EM	6.9	PKZM0-10	C14G40	7.8	PKZM0-10	C14G40
1~ 115 V/3~ 230 V with EMC						
DM1-111D6EB-S20S-EM	1.6	PKZM0-1.6	C10G10	3	PKZM0-4	C10G10
DM1-113D0EB-S20S-EM	3	PKZM0-4	C10G25	4.8	PKZM0-6.3	C10G25
DM1-114D8EB-S20S-EM	4.8	PKZM0-6.3	C10G32	6.9	PKZM0-10	C10G32
DM1-116D9EB-S20S-EM	6.9	PKZM0-10	C14G40	7.8	PKZM0-10	C14G40
1~/3~ 230 V without EMC						
DM1-121D6NB-S20S-EM	1.6	PKZM0-1.6	C10G4	3	PKZM0-4	C10G4
DM1-123D0NB-S20S-EM	3	PKZM0-4	C10G10	4.8	PKZM0-6.3	C10G10
DM1-124D8NB-S20S-EM	4.8	PKZM0-6.3	C10G10	7.8	PKZM0-10	C10G10
DM1-127D8NB-S20S-EM	7.8	PKZM0-10	C10G16	11	PKZM0-12	C10G16
DM1-12011NB-S20S-EM	11	PKZM0-12	C10G25	17.5	PKZM0-20	C10G25
DM1-12017NB-S20S-EM	17.5	PKZM0-20	C10G32	25	PKZM0-25	C10G32
1~/3~ 230 V with EMC						
DM1-121D6EB-S20S-EM	1.6	PKZM0-1.6	C10G4	3	PKZM0-4	C10G4
DM1-123D0EB-S20S-EM	3	PKZM0-4	C10G10	4.8	PKZM0-6.3	C10G10
DM1-124D8EB-S20S-EM	4.8	PKZM0-6.3	C10G10	7.8	PKZM0-10	C10G10
DM1-127D8EB-S20S-EM	7.8	PKZM0-10	C10G16	11	PKZM0-12	C10G16
DM1-12011EB-S20S-EM	11	PKZM0-12	C10G25	17.5	PKZM0-20	C10G25
DM1-12017EB-S20S-EM	17.5	PKZM0-20	C10G32	25	PKZM0-25	C10G32
3~/3~ 230 V without EMC						
DM1-321D6NB-S20S-EM	1.6	PKZM0-1.6	C10G4	3	PKZM0-4	C10G4
DM1-323D0NB-S20S-EM	3	PKZM0-4	C10G10	4.8	PKZM0-6.3	C10G10
DM1-324D8NB-S20S-EM	4.8	PKZM0-6.3	C10G10	7.8	PKZM0-10	C10G10
DM1-327D8NB-S20S-EM	7.8	PKZM0-10	C10G16	11	PKZM0-12	C10G16
DM1-32011NB-S20S-EM	11	PKZM0-12	C10G25	17.5	PKZM0-20	C10G25
DM1-32017NB-S20S-EM	17.5	PKZM0-20	C10G32	25	PKZM0-25	C10G32
DM1-32025NB-S20S-EM	25	PKZM0-25	C14G40	32	PKZM0-32	C14G40
DM1-32032NB-S20S-EM	32	PKZM0-32	C22G63	48	PKZM4-50	C22G63
DM1-32048NB-S20S-EM	48	PKZM4-50	C22G80	61	PKZM4-63	C22G80
3~/3~ 230 V with EMC						
DM1-321D6EB-S20S-EM	1.6	PKZM0-1.6	C10G4	3	PKZM0-4	C10G4
DM1-323D0EB-S20S-EM	3	PKZM0-4	C10G10	4.8	PKZM0-6.3	C10G10
DM1-324D8EB-S20S-EM	4.8	PKZM0-6.3	C10G10	7.8	PKZM0-10	C10G10
DM1-327D8EB-S20S-EM	7.8	PKZM0-10	C10G16	11	PKZM0-12	C10G16
DM1-32011EB-S20S-EM	11	PKZM0-12	C10G25	17.5	PKZM0-20	C10G25
DM1-32017EB-S20S-EM	17.5	PKZM0-20	C10G32	25	PKZM0-25	C10G32
DM1-32025EB-S20S-EM	25	PKZM0-25	C14G40	32	PKZM0-32	C14G40
DM1-32032EB-S20S-EM	32	PKZM0-32	C22G63	48	PKZM4-50	C22G63
DM1-32048EB-S20S-EM	48	PKZM4-50	C22G80	61	PKZM4-63	C22G80

			External brake resistors			
Minimum braking resistance	Switch-on voltage – brake chopper	Quantity – brake chopper	10.0% ED	20.0% ED	40.0% ED	RCD type
Ω						
36	395	1				FRCdM-25/4/003-G/Bfq
36	395	1				FRCdM-25/4/003-G/Bfq
16	395	1				FRCdM-40/4/003-G/Bfq
16	395	1				FRCdM-40/4/003-G/Bfq
36	395	1				FRCdM-25/4/003-G/Bfq
36	395	1				FRCdM-25/4/003-G/Bfq
16	395	1				FRCdM-40/4/003-G/Bfq
16	395	1				FRCdM-40/4/003-G/Bfq
36	395	1	DX-BR040-3K1	DX-BR040-3K1	DX-BR040-3K1	FRCdM-25/4/003-G/Bfq
36	395	1	DX-BR040-3K1	DX-BR040-3K1	DX-BR040-3K1	FRCdM-25/4/003-G/Bfq
36	395	1	DX-BR040-3K1	DX-BR040-3K1	DX-BR040-3K1	FRCdM-25/4/003-G/Bfq
16	395	1	DX-BR022-1K4	DX-BR022-1K4	DX-BR022-3K1	FRCdM-25/4/003-G/Bfq
16	395	1	DX-BR022-1K4	DX-BR022-3K1	DX-BR022-3K1	FRCdM-25/4/003-G/Bfq
12	395	1	DX-BR012-3K1	DX-BR012-3K1	DX-BR012-5K1	FRCdM-40/4/003-G/Bfq
36	395	1	DX-BR040-3K1	DX-BR040-3K1	DX-BR040-3K1	FRCdM-25/4/003-G/Bfq
36	395	1	DX-BR040-3K1	DX-BR040-3K1	DX-BR040-3K1	FRCdM-25/4/003-G/Bfq
36	395	1	DX-BR040-3K1	DX-BR040-3K1	DX-BR040-3K1	FRCdM-25/4/003-G/Bfq
16	395	1	DX-BR022-1K4	DX-BR022-1K4	DX-BR022-3K1	FRCdM-25/4/003-G/Bfq
16	395	1	DX-BR022-1K4	DX-BR022-3K1	DX-BR022-3K1	FRCdM-25/4/003-G/Bfq
12	395	1	DX-BR012-3K1	DX-BR012-3K1	DX-BR012-5K1	FRCdM-40/4/003-G/Bfq
36	395	1	DX-BR040-3K1	DX-BR040-3K1	DX-BR040-3K1	FRCdM-25/4/003-G/Bfq
36	395	1	DX-BR040-3K1	DX-BR040-3K1	DX-BR040-3K1	FRCdM-25/4/003-G/Bfq
36	395	1	DX-BR040-3K1	DX-BR040-3K1	DX-BR040-3K1	FRCdM-25/4/003-G/Bfq
36	395	1	DX-BR040-3K1	DX-BR040-3K1	DX-BR040-3K1	FRCdM-25/4/003-G/Bfq
16	395	1	DX-BR022-1K4	DX-BR022-3K1	DX-BR022-3K1	FRCdM-25/4/003-G/Bfq
16	395	1	DX-BR022-1K4	DX-BR022-3K1	DX-BR022-5K1	FRCdM-40/4/003-G/Bfq
12	395	1	DX-BR012-3K1	DX-BR012-3K1	DX-BR012-9K2	FRCdM-40/4/003-G/Bfq
6	395	1	P:3 x DX-BR022-1K4	P:3 x DX-BR022-1K4	P:3 x DX-BR022-3K1	FRCdM-63/4/003-G/Bfq
6	395	1	P:3 x DX-BR022-1K4	P:3 x DX-BR022-3K1	P:3 x DX-BR022-5K1	
36	395	1	DX-BR040-3K1	DX-BR040-3K1	DX-BR040-3K1	FRCdM-25/4/003-G/Bfq
36	395	1	DX-BR040-3K1	DX-BR040-3K1	DX-BR040-3K1	FRCdM-25/4/003-G/Bfq
36	395	1	DX-BR040-3K1	DX-BR040-3K1	DX-BR040-3K1	FRCdM-25/4/003-G/Bfq
36	395	1	DX-BR040-3K1	DX-BR040-3K1	DX-BR040-3K1	FRCdM-25/4/003-G/Bfq
16	395	1	DX-BR022-1K4	DX-BR022-3K1	DX-BR022-3K1	FRCdM-25/4/003-G/Bfq
16	395	1	DX-BR022-1K4	DX-BR022-3K1	DX-BR022-5K1	FRCdM-40/4/003-G/Bfq
12	395	1	DX-BR012-3K1	DX-BR012-3K1	DX-BR012-9K2	FRCdM-40/4/003-G/Bfq
6	395	1	P:3 x DX-BR022-1K4	P:3 x DX-BR022-1K4	P:3 x DX-BR022-3K1	FRCdM-63/4/003-G/Bfq
6	395	1	P:3 x DX-BR022-1K4	P:3 x DX-BR022-3K1	P:3 x DX-BR022-5K1	

2.5 Variable frequency drive DM1 to 22 kW

DM1 External components

Catalog Number	I_e (150% overload)			I_e (110% overload)		
	Rated operational current	Type 1 coordination	Type 1 coordination	Rated operational current	Type 1 coordination	Type 1 coordination
	A			A		
3~/3~ 400 V without EMC						
DM1-341D5NB-S20S-EM	1.5	PKZM0-1.6	C10G4	2.2	PKZM0-2.5	C10G4
DM1-342D2NB-S20S-EM	2.2	PKZM0-2.5	C10G10	4.3	PKZM0-6.3	C10G10
DM1-344D3NB-S20S-EM	4.3	PKZM0-6.3	C10G10	5.6	PKZM0-6.3	C10G10
DM1-345D6NB-S20S-EM	5.6	PKZM0-6.3	C10G10	7.6	PKZM0-10	C10G10
DM1-347D6NB-S20S-EM	7.6	PKZM0-10	C10G16	12	PKZM0-12	C10G16
DM1-34012NB-S20S-EM	12	PKZM0-12	C10G20	16	PKZM0-16	C10G20
DM1-34016NB-S20S-EM	16	PKZM0-16	C10G32	23	PKZM0-25	C10G32
DM1-34023NB-S20S-EM	23	PKZM0-25	C14G40	31	PKZM0-32	C14G40
DM1-34031NB-S20S-EM	31	PKZM0-32	C14G50	38	PKZM4-40	C14G50
DM1-34038NB-S20S-EM	38	PKZM4-40	C22G63	46	PKZM4-50	C22G63
3~/3~ 400 V with EMC						
DM1-341D5EB-S20S-EM	1.5	PKZM0-1.6	C10G4	2.2	PKZM0-2.5	C10G4
DM1-342D2EB-S20S-EM	2.2	PKZM0-2.5	C10G10	4.3	PKZM0-6.3	C10G10
DM1-344D3EB-S20S-EM	4.3	PKZM0-6.3	C10G10	5.6	PKZM0-6.3	C10G10
DM1-345D6EB-S20S-EM	5.6	PKZM0-6.3	C10G10	7.6	PKZM0-10	C10G10
DM1-347D6EB-S20S-EM	7.6	PKZM0-10	C10G16	12	PKZM0-12	C10G16
DM1-34012EB-S20S-EM	12	PKZM0-12	C10G20	16	PKZM0-16	C10G20
DM1-34016EB-S20S-EM	16	PKZM0-16	C10G32	23	PKZM0-25	C10G32
DM1-34023EB-S20S-EM	23	PKZM0-25	C14G40	31	PKZM0-32	C14G40
DM1-34031EB-S20S-EM	31	PKZM0-32	C14G50	38	PKZM4-40	C14G50
DM1-34038EB-S20S-EM	38	PKZM4-40	C22G63	46	PKZM4-50	C22G63
3~/3~ 575 V without EMC						
DM1-354D5NB-S20S-EM	4.5	PKZM0-6.3	C10G10	7.5	PKZM0-10	C10G10
DM1-357D5NB-S20S-EM	7.5	PKZM0-10	C10G10	10	PKZM0-10	C10G10
DM1-35010NB-S20S-EM	10	PKZM0-10	C10G16	13.5	PKZM0-16	C10G16
DM1-35013NB-S20S-EM	13.5	PKZM0-16	C10G20	18	PKZM0-20	C10G20
DM1-35018NB-S20S-EM	18	PKZM0-20	C10G25	22	PKZM0-25	C10G25
DM1-35022NB-S20S-EM	22	PKZM0-25	C14G40	27	PKZM0-32	C14G40
3~/3~ 575 V with EMC						
DM1-354D5EB-S20S-EM	4.5	PKZM0-6.3	C10G10	7.5	PKZM0-10	C10G10
DM1-357D5EB-S20S-EM	7.5	PKZM0-10	C10G10	10	PKZM0-10	C10G10
DM1-35010EB-S20S-EM	10	PKZM0-10	C10G16	13.5	PKZM0-16	C10G16
DM1-35013EB-S20S-EM	13.5	PKZM0-16	C10G20	18	PKZM0-20	C10G20
DM1-35018EB-S20S-EM	18	PKZM0-20	C10G25	22	PKZM0-25	C10G25
DM1-35022EB-S20S-EM	22	PKZM0-25	C14G40	27	PKZM0-32	C14G40

			External brake resistors			
Minimum braking resistance	Switch-on voltage – brake chopper	Quantity – brake chopper	10.0% ED	20.0% ED	40.0% ED	RCD type
Ω						
105	790	1	R:3 x DX-BR035-1K1	R:3 x DX-BR035-1K1	R:3 x DX-BR035-1K1	FRCdM-25/4/003-G/Bfq
105	790	1	R:3 x DX-BR035-1K1	R:3 x DX-BR035-1K1	R:3 x DX-BR040-3K1	FRCdM-25/4/003-G/Bfq
105	790	1	R:3 x DX-BR035-1K1	R:3 x DX-BR035-1K1	R:3 x DX-BR040-3K1	FRCdM-25/4/003-G/Bfq
105	790	1	R:3 x DX-BR035-1K1	R:3 x DX-BR040-3K1	R:3 x DX-BR040-3K1	FRCdM-25/4/003-G/Bfq
35	790	1	DX-BR035-1K1	DX-BR040-3K1	DX-BR040-5K1	FRCdM-25/4/003-G/Bfq
35	790	1	DX-BR040-3K1	DX-BR040-3K1	DX-BR047-9K2	FRCdM-25/4/003-G/Bfq
35	790	1	DX-BR040-3K1	DX-BR040-5K1	DX-BR047-9K2	FRCdM-40/4/003-G/Bfq
26	790	1	DX-BR040-3K1	DX-BR040-5K1	P2R2: DX-BR047-9K2	FRCdM-40/4/003-G/Bfq
17	790	1	DX-BR022-5K1	DX-BR022-9K2	P:2 x DX-BR047-9K2	FRCdM-63/4/003-G/Bfq
17	790	1	DX-BR022-5K1	DX-BR022-9K2	P:2 x DX-BR047-9K2	FRCdM-63/4/003-G/Bfq
105	790	1	R:3 x DX-BR035-1K1	R:3 x DX-BR035-1K1	R:3 x DX-BR035-1K1	FRCdM-25/4/003-G/Bfq
105	790	1	R:3 x DX-BR035-1K1	R:3 x DX-BR035-1K1	R:3 x DX-BR040-3K1	FRCdM-25/4/003-G/Bfq
105	790	1	R:3 x DX-BR035-1K1	R:3 x DX-BR035-1K1	R:3 x DX-BR040-3K1	FRCdM-25/4/003-G/Bfq
105	790	1	R:3 x DX-BR035-1K1	R:3 x DX-BR040-3K1	R:3 x DX-BR040-3K1	FRCdM-25/4/003-G/Bfq
35	790	1	DX-BR035-1K1	DX-BR040-3K1	DX-BR040-5K1	FRCdM-25/4/003-G/Bfq
35	790	1	DX-BR040-3K1	DX-BR040-3K1	DX-BR047-9K2	FRCdM-25/4/003-G/Bfq
35	790	1	DX-BR040-3K1	DX-BR040-5K1	DX-BR047-9K2	FRCdM-40/4/003-G/Bfq
26	790	1	DX-BR040-3K1	DX-BR040-5K1	P2R2: DX-BR047-9K2	FRCdM-40/4/003-G/Bfq
17	790	1	DX-BR022-5K1	DX-BR022-9K2	P:2 x DX-BR047-9K2	FRCdM-63/4/003-G/Bfq
17	790	1	DX-BR022-5K1	DX-BR022-9K2	P:2 x DX-BR047-9K2	FRCdM-63/4/003-G/Bfq
0	990	1				FRCdM-25/4/003-G/Bfq
0	990	1				FRCdM-25/4/003-G/Bfq
0	990	1				FRCdM-25/4/003-G/Bfq
0	990	1				FRCdM-25/4/003-G/Bfq
0	990	1				FRCdM-25/4/003-G/Bfq
0	990	1				FRCdM-40/4/003-G/Bfq
0	990	1				FRCdM-25/4/003-G/Bfq
0	990	1				FRCdM-25/4/003-G/Bfq
0	990	1				FRCdM-25/4/003-G/Bfq
0	990	1				FRCdM-25/4/003-G/Bfq
0	990	1				FRCdM-25/4/003-G/Bfq
0	990	1				FRCdM-40/4/003-G/Bfq

DM1 External components

Catalog Number	High Overload (150%)								
	Rated operational current I_e	Optional mains contactor	Internal EMC Filter			External EMC filter			
			Permissible cable length for C1	Permissible cable length for C2	Permissible cable length for C3		Permissible cable length for C1	Permissible cable length for C2	Permissible cable length for C3
	A		m	m	m		m	m	m
3~/3~ 230 V without EMC									
DM1-321D6NB-N20B-EM	1.6	DILM7-10 (230V50HZ,240V60HZ)	0	0	0	DX-EMC34-008	5	50	75
DM1-323D0NB-N20B-EM	3	DILM7-10 (230V50HZ,240V60HZ)	0	0	0	DX-EMC34-008	5	50	75
DM1-324D8NB-N20B-EM	4.8	DILM7-10 (230V50HZ,240V60HZ)	0	0	0	DX-EMC34-008	5	50	75
DM1-327D8NB-N20B-EM	7.8	DILM7-10 (230V50HZ,240V60HZ)	0	0	0	DX-EMC34-008	5	50	75
DM1-32011NB-N20B-EM	11	DILM7-10 (230V50HZ,240V60HZ)	0	0	0	DX-EMC34-016	5	50	75
DM1-32017NB-N20B-EM	17.5	DILM7-10 (230V50HZ,240V60HZ)	0	0	0	DX-EMC34-030	5	50	75
DM1-32025NB-N20B-EM	25	DILM17-10 (230V50HZ,240V60HZ)	0	0	0	DX-EMC34-030	5	50	75
DM1-32032NB-N20B-EM	32	DILM17-10 (230V50HZ,240V60HZ)	0	0	0	DX-EMC34-042	5	50	75
DM1-32048NB-N20B-EM	48	DILM40 (230V50HZ,240V60HZ)	0	0	0	DX-EMC34-055	5	50	75
3~/3~ 230 V with EMC									
DM1-321D6EB-N20B-EM	1.6	DILM7-10 (230V50HZ,240V60HZ)	0	5	25	DX-EMC34-008	5	50	75
DM1-323D0EB-N20B-EM	3	DILM7-10 (230V50HZ,240V60HZ)	0	5	25	DX-EMC34-008	5	50	75
DM1-324D8EB-N20B-EM	4.8	DILM7-10 (230V50HZ,240V60HZ)	0	5	25	DX-EMC34-008	5	50	75
DM1-327D8EB-N20B-EM	7.8	DILM7-10 (230V50HZ,240V60HZ)	0	5	25	DX-EMC34-008	5	50	75
DM1-32011EB-N20B-EM	11	DILM7-10 (230V50HZ,240V60HZ)	0	5	25	DX-EMC34-016	5	50	75
DM1-32017EB-N20B-EM	17.5	DILM7-10 (230V50HZ,240V60HZ)	0	5	25	DX-EMC34-030	5	50	75
DM1-32025EB-N20B-EM	25	DILM17-10 (230V50HZ,240V60HZ)	0	5	25	DX-EMC34-030	5	50	75
DM1-32032EB-N20B-EM	32	DILM17-10 (230V50HZ,240V60HZ)	0	5	25	DX-EMC34-042	5	50	75
DM1-32048EB-N20B-EM	48	DILM40 (230V50HZ,240V60HZ)	0	5	25	DX-EMC34-055	5	50	75
3~/3~ 400 V without EMC									
DM1-341D5NB-N20B-EM	1.5	DILM7-10 (230V50HZ,240V60HZ)	0	0	0	DX-EMC34-008	5	50	75
DM1-342D2NB-N20B-EM	2.2	DILM7-10 (230V50HZ,240V60HZ)	0	0	0	DX-EMC34-008	5	50	75
DM1-344D3NB-N20B-EM	4.3	DILM7-10 (230V50HZ,240V60HZ)	0	0	0	DX-EMC34-008	5	50	75
DM1-345D6NB-N20B-EM	5.6	DILM7-10 (230V50HZ,240V60HZ)	0	0	0	DX-EMC34-008	5	50	75
DM1-347D6NB-N20B-EM	7.6	DILM7-10 (230V50HZ,240V60HZ)	0	0	0	DX-EMC34-008	5	50	75
DM1-34012NB-N20B-EM	12	DILM7-10 (230V50HZ,240V60HZ)	0	0	0	DX-EMC34-016	5	50	75
DM1-34016NB-N20B-EM	16	DILM7-10 (230V50HZ,240V60HZ)	0	0	0	DX-EMC34-016	5	50	75
DM1-34023NB-N20B-EM	23	DILM17-10 (230V50HZ,240V60HZ)	0	0	0	DX-EMC34-030	5	50	75
DM1-34031NB-N20B-EM	31	DILM17-10 (230V50HZ,240V60HZ)	0	0	0	DX-EMC34-042	5	50	75
DM1-34038NB-N20B-EM	38	DILM17-10 (230V50HZ,240V60HZ)	0	0	0	DX-EMC34-042	5	50	75
3~/3~ 400 V with EMC									
DM1-341D5EB-N20B-EM	1.5	DILM7-10 (230V50HZ,240V60HZ)	0	5	25	DX-EMC34-008	5	50	75
DM1-342D2EB-N20B-EM	2.2	DILM7-10 (230V50HZ,240V60HZ)	0	5	25	DX-EMC34-008	5	50	75
DM1-344D3EB-N20B-EM	4.3	DILM7-10 (230V50HZ,240V60HZ)	0	5	25	DX-EMC34-008	5	50	75
DM1-345D6EB-N20B-EM	5.6	DILM7-10 (230V50HZ,240V60HZ)	0	5	25	DX-EMC34-008	5	50	75
DM1-347D6EB-N20B-EM	7.6	DILM7-10 (230V50HZ,240V60HZ)	0	5	25	DX-EMC34-008	5	50	75
DM1-34012EB-N20B-EM	12	DILM7-10 (230V50HZ,240V60HZ)	0	5	25	DX-EMC34-016	5	50	75
DM1-34016EB-N20B-EM	16	DILM7-10 (230V50HZ,240V60HZ)	0	5	25	DX-EMC34-016	5	50	75
DM1-34023EB-N20B-EM	23	DILM17-10 (230V50HZ,240V60HZ)	0	5	25	DX-EMC34-030	5	50	75
DM1-34031EB-N20B-EM	31	DILM17-10 (230V50HZ,240V60HZ)	0	5	25	DX-EMC34-042	5	50	75
DM1-34038EB-N20B-EM	38	DILM17-10 (230V50HZ,240V60HZ)	0	5	25	DX-EMC34-042	5	50	75

External EMC filter (low fault current)				Mains choke		Motor choke	Sine filter	All-pole sine filter
	Permissible cable length for C1	Permissible cable length for C2	Permissible cable length for C3		u_k			
	m	m	m		%			
DX-EMC34-008-L		25	50	DX-LN3-004	7.51	DX-LM3-008	DX-SIN3-004	DX-SIN3-2D5-A
DX-EMC34-008-L		25	50	DX-LN3-004	7.51	DX-LM3-008	DX-SIN3-004	DX-SIN3-004-A
DX-EMC34-008-L		25	50	DX-LN3-006	4.9	DX-LM3-008	DX-SIN3-010	DX-SIN3-006-A
DX-EMC34-008-L		25	50	DX-LN3-010	2.94	DX-LM3-008	DX-SIN3-010	DX-SIN3-013-A
DX-EMC34-016-L		25	50	DX-LN3-016	1.84	DX-LM3-011	DX-SIN3-016	DX-SIN3-013-A
DX-EMC34-030-L		25	50	DX-LN3-025	1.18	DX-LM3-035	DX-SIN3-023	DX-SIN3-024-A
DX-EMC34-030-L		25	50	DX-LN3-025	1.18	DX-LM3-035	DX-SIN3-032	DX-SIN3-046-A
DX-EMC34-042-L		25	50	DX-LN3-040	0.64	DX-LM3-035	DX-SIN3-032	DX-SIN3-046-A
DX-EMC34-055-L		25	50	DX-LN3-050	0.37	DX-LM3-050	DX-SIN3-048	DX-SIN3-065-A
DX-EMC34-008-L		25	50	DX-LN3-004	7.51	DX-LM3-008	DX-SIN3-004	DX-SIN3-2D5-A
DX-EMC34-008-L		25	50	DX-LN3-004	7.51	DX-LM3-008	DX-SIN3-004	DX-SIN3-004-A
DX-EMC34-008-L		25	50	DX-LN3-006	4.9	DX-LM3-008	DX-SIN3-010	DX-SIN3-006-A
DX-EMC34-008-L		25	50	DX-LN3-010	2.94	DX-LM3-008	DX-SIN3-010	DX-SIN3-013-A
DX-EMC34-016-L		25	50	DX-LN3-016	1.84	DX-LM3-011	DX-SIN3-016	DX-SIN3-013-A
DX-EMC34-030-L		25	50	DX-LN3-025	1.18	DX-LM3-035	DX-SIN3-023	DX-SIN3-024-A
DX-EMC34-030-L		25	50	DX-LN3-025	1.18	DX-LM3-035	DX-SIN3-032	DX-SIN3-046-A
DX-EMC34-042-L		25	50	DX-LN3-040	0.64	DX-LM3-035	DX-SIN3-032	DX-SIN3-046-A
DX-EMC34-055-L		25	50	DX-LN3-050	0.37	DX-LM3-050	DX-SIN3-048	DX-SIN3-065-A
DX-EMC34-008-L		25	50	DX-LN3-004	7.51	DX-LM3-008	DX-SIN3-004	DX-SIN3-2D5-A
DX-EMC34-008-L		25	50	DX-LN3-004	7.51	DX-LM3-008	DX-SIN3-004	DX-SIN3-2D5-A
DX-EMC34-008-L		25	50	DX-LN3-006	4.9	DX-LM3-008	DX-SIN3-010	DX-SIN3-006-A
DX-EMC34-008-L		25	50	DX-LN3-006	4.9	DX-LM3-008	DX-SIN3-010	DX-SIN3-006-A
DX-EMC34-008-L		25	50	DX-LN3-010	2.94	DX-LM3-008	DX-SIN3-010	DX-SIN3-013-A
DX-EMC34-016-L		25	50	DX-LN3-016	1.84	DX-LM3-016	DX-SIN3-016	DX-SIN3-013-A
DX-EMC34-016-L		25	50	DX-LN3-016	1.84	DX-LM3-016	DX-SIN3-016	DX-SIN3-024-A
DX-EMC34-030-L		25	50	DX-LN3-025	1.18	DX-LM3-035	DX-SIN3-023	DX-SIN3-024-A
DX-EMC34-042-L		25	50	DX-LN3-040	0.64	DX-LM3-035	DX-SIN3-032	DX-SIN3-046-A
DX-EMC34-042-L		25	50	DX-LN3-040	0.64	DX-LM3-050	DX-SIN3-048	DX-SIN3-046-A
DX-EMC34-008-L		25	50	DX-LN3-004	7.51	DX-LM3-008	DX-SIN3-004	DX-SIN3-2D5-A
DX-EMC34-008-L		25	50	DX-LN3-004	7.51	DX-LM3-008	DX-SIN3-004	DX-SIN3-2D5-A
DX-EMC34-008-L		25	50	DX-LN3-006	4.9	DX-LM3-008	DX-SIN3-010	DX-SIN3-006-A
DX-EMC34-008-L		25	50	DX-LN3-006	4.9	DX-LM3-008	DX-SIN3-010	DX-SIN3-006-A
DX-EMC34-008-L		25	50	DX-LN3-010	2.94	DX-LM3-008	DX-SIN3-010	DX-SIN3-013-A
DX-EMC34-016-L		25	50	DX-LN3-016	1.84	DX-LM3-016	DX-SIN3-016	DX-SIN3-013-A
DX-EMC34-016-L		25	50	DX-LN3-016	1.84	DX-LM3-016	DX-SIN3-016	DX-SIN3-024-A
DX-EMC34-030-L		25	50	DX-LN3-025	1.18	DX-LM3-035	DX-SIN3-023	DX-SIN3-024-A
DX-EMC34-042-L		25	50	DX-LN3-040	0.64	DX-LM3-035	DX-SIN3-032	DX-SIN3-046-A
DX-EMC34-042-L		25	50	DX-LN3-040	0.64	DX-LM3-050	DX-SIN3-048	DX-SIN3-046-A

2.5 Variable frequency drive DM1 to 22 kW

DM1 External components

Catalog Number	High Overload (150%)								
	Rated operational current I_e	Optional mains contactor	Internal EMC Filter			External EMC filter			
			Permissible cable length for C1	Permissible cable length for C2	Permissible cable length for C3		Permissible cable length for C1	Permissible cable length for C2	Permissible cable length for C3
	A		m	m	m		m	m	m
1~ 115 V/3~230 V without EMC									
DM1-111D6NB-S20S-EM	1.6	DILM7-10 (230V50HZ,240V60HZ)	0	0	0	DX-EMC12-014		50	75
DM1-113D0NB-S20S-EM	3	DILM7-10 (230V50HZ,240V60HZ)	0	0	0	DX-EMC12-014		50	75
DM1-114D8NB-S20S-EM	4.8	DILM7-10 (230V50HZ,240V60HZ)	0	0	0	DX-EMC12-014		50	75
DM1-116D9NB-S20S-EM	6.9	DILM7-10 (230V50HZ,240V60HZ)	0	0	0	DX-EMC12-014		50	75
1~ 115 V/3~ 230 V with EMC									
DM1-111D6EB-S20S-EM	1.6	DILM7-10 (230V50HZ,240V60HZ)	0	5	25	DX-EMC12-014		50	75
DM1-113D0EB-S20S-EM	3	DILM7-10 (230V50HZ,240V60HZ)	0	5	25	DX-EMC12-014		50	75
DM1-114D8EB-S20S-EM	4.8	DILM7-10 (230V50HZ,240V60HZ)	0	5	25	DX-EMC12-014		50	75
DM1-116D9EB-S20S-EM	6.9	DILM7-10 (230V50HZ,240V60HZ)	0	5	25	DX-EMC12-014		50	75
1~/3~ 230 V without EMC									
DM1-121D6NB-S20S-EM	1.6	DILM7-10 (230V50HZ,240V60HZ)	0	0	0	DX-EMC12-014		50	75
DM1-123D0NB-S20S-EM	3	DILM7-10 (230V50HZ,240V60HZ)	0	0	0	DX-EMC12-014		50	75
DM1-124D8NB-S20S-EM	4.8	DILM7-10 (230V50HZ,240V60HZ)	0	0	0	DX-EMC12-014		50	75
DM1-127D8NB-S20S-EM	7.8	DILM7-10 (230V50HZ,240V60HZ)	0	0	0	DX-EMC12-014		50	75
DM1-12011NB-S20S-EM	11	DILM7-10 (230V50HZ,240V60HZ)	0	0	0	DX-EMC12-014		50	75
DM1-12017NB-S20S-EM	17.5	DILM7-10 (230V50HZ,240V60HZ)	0	0	0	DX-EMC12-019		50	75
1~/3~ 230 V with EMC									
DM1-121D6EB-S20S-EM	1.6	DILM7-10 (230V50HZ,240V60HZ)	0	5	25	DX-EMC12-014		50	75
DM1-123D0EB-S20S-EM	3	DILM7-10 (230V50HZ,240V60HZ)	0	5	25	DX-EMC12-014		50	75
DM1-124D8EB-S20S-EM	4.8	DILM7-10 (230V50HZ,240V60HZ)	0	5	25	DX-EMC12-014		50	75
DM1-127D8EB-S20S-EM	7.8	DILM7-10 (230V50HZ,240V60HZ)	0	5	25	DX-EMC12-014		50	75
DM1-12011EB-S20S-EM	11	DILM7-10 (230V50HZ,240V60HZ)	0	5	25	DX-EMC12-014		50	75
DM1-12017EB-S20S-EM	17.5	DILM7-10 (230V50HZ,240V60HZ)	0	5	25	DX-EMC12-019		50	75
3~/3~ 230 V without EMC									
DM1-321D6NB-S20S-EM	1.6	DILM7-10 (230V50HZ,240V60HZ)	0	0	0	DX-EMC34-008	5	50	75
DM1-323D0NB-S20S-EM	3	DILM7-10 (230V50HZ,240V60HZ)	0	0	0	DX-EMC34-008	5	50	75
DM1-324D8NB-S20S-EM	4.8	DILM7-10 (230V50HZ,240V60HZ)	0	0	0	DX-EMC34-008	5	50	75
DM1-327D8NB-S20S-EM	7.8	DILM7-10 (230V50HZ,240V60HZ)	0	0	0	DX-EMC34-008	5	50	75
DM1-32011NB-S20S-EM	11	DILM7-10 (230V50HZ,240V60HZ)	0	0	0	DX-EMC34-016	5	50	75
DM1-32017NB-S20S-EM	17.5	DILM7-10 (230V50HZ,240V60HZ)	0	0	0	DX-EMC34-030	5	50	75
DM1-32025NB-S20S-EM	25	DILM17-10 (230V50HZ,240V60HZ)	0	0	0	DX-EMC34-030	5	50	75
DM1-32032NB-S20S-EM	32	DILM17-10 (230V50HZ,240V60HZ)	0	0	0	DX-EMC34-042	5	50	75
DM1-32048NB-S20S-EM	48	DILM40 (230V50HZ,240V60HZ)	0	0	0	DX-EMC34-055	5	50	75
3~/3~ 230 V with EMC									
DM1-321D6EB-S20S-EM	1.6	DILM7-10 (230V50HZ,240V60HZ)	0	5	25	DX-EMC34-008	5	50	75
DM1-323D0EB-S20S-EM	3	DILM7-10 (230V50HZ,240V60HZ)	0	5	25	DX-EMC34-008	5	50	75
DM1-324D8EB-S20S-EM	4.8	DILM7-10 (230V50HZ,240V60HZ)	0	5	25	DX-EMC34-008	5	50	75
DM1-327D8EB-S20S-EM	7.8	DILM7-10 (230V50HZ,240V60HZ)	0	5	25	DX-EMC34-008	5	50	75
DM1-32011EB-S20S-EM	11	DILM7-10 (230V50HZ,240V60HZ)	0	5	25	DX-EMC34-016	5	50	75
DM1-32017EB-S20S-EM	17.5	DILM7-10 (230V50HZ,240V60HZ)	0	5	25	DX-EMC34-030	5	50	75
DM1-32025EB-S20S-EM	25	DILM17-10 (230V50HZ,240V60HZ)	0	5	25	DX-EMC34-030	5	50	75
DM1-32032EB-S20S-EM	32	DILM17-10 (230V50HZ,240V60HZ)	0	5	25	DX-EMC34-042	5	50	75
DM1-32048EB-S20S-EM	48	DILM40 (230V50HZ,240V60HZ)	0	5	25	DX-EMC34-055	5	50	75

External EMC filter (low fault current)				Mains choke		Motor choke	Sine filter	All-pole sine filter
	Permissible cable length for C1	Permissible cable length for C2	Permissible cable length for C3		u_k			
	m	m	m		%			
				DX-LN3-004	7.51	DX-LM3-008	DX-SIN3-004	DX-SIN3-2D5-A
				DX-LN3-004	7.51	DX-LM3-008	DX-SIN3-004	DX-SIN3-004-A
				DX-LN3-006	4.9	DX-LM3-008	DX-SIN3-010	DX-SIN3-006-A
				DX-LN3-010	2.94	DX-LM3-008	DX-SIN3-010	DX-SIN3-013-A
		25	50	DX-LN3-004	7.51	DX-LM3-008	DX-SIN3-004	DX-SIN3-2D5-A
		25	50	DX-LN3-004	7.51	DX-LM3-008	DX-SIN3-004	DX-SIN3-004-A
		25	50	DX-LN3-006	4.9	DX-LM3-008	DX-SIN3-010	DX-SIN3-006-A
		25	50	DX-LN3-010	2.94	DX-LM3-008	DX-SIN3-010	DX-SIN3-013-A
				DX-LN3-004	7.51	DX-LM3-008	DX-SIN3-004	DX-SIN3-2D5-A
				DX-LN3-004	7.51	DX-LM3-008	DX-SIN3-004	DX-SIN3-004-A
				DX-LN3-006	4.9	DX-LM3-008	DX-SIN3-010	DX-SIN3-006-A
				DX-LN3-010	2.94	DX-LM3-008	DX-SIN3-010	DX-SIN3-013-A
				DX-LN3-016	1.84	DX-LM3-011	DX-SIN3-016	DX-SIN3-013-A
				DX-LN3-025	1.18	DX-LM3-035	DX-SIN3-023	DX-SIN3-024-A
		25	50	DX-LN3-004	7.51	DX-LM3-008	DX-SIN3-004	DX-SIN3-2D5-A
		25	50	DX-LN3-004	7.51	DX-LM3-008	DX-SIN3-004	DX-SIN3-004-A
		25	50	DX-LN3-006	4.9	DX-LM3-008	DX-SIN3-010	DX-SIN3-006-A
		25	50	DX-LN3-010	2.94	DX-LM3-008	DX-SIN3-010	DX-SIN3-013-A
		25	50	DX-LN3-016	1.84	DX-LM3-011	DX-SIN3-016	DX-SIN3-013-A
		25	50	DX-LN3-025	1.18	DX-LM3-035	DX-SIN3-023	DX-SIN3-024-A
DX-EMC34-008-L		25	50	DX-LN3-004	7.51	DX-LM3-008	DX-SIN3-004	DX-SIN3-2D5-A
DX-EMC34-008-L		25	50	DX-LN3-004	7.51	DX-LM3-008	DX-SIN3-004	DX-SIN3-004-A
DX-EMC34-008-L		25	50	DX-LN3-006	4.9	DX-LM3-008	DX-SIN3-010	DX-SIN3-006-A
DX-EMC34-008-L		25	50	DX-LN3-010	2.94	DX-LM3-008	DX-SIN3-010	DX-SIN3-013-A
DX-EMC34-016-L		25	50	DX-LN3-016	1.84	DX-LM3-011	DX-SIN3-016	DX-SIN3-013-A
DX-EMC34-030-L		25	50	DX-LN3-025	1.18	DX-LM3-035	DX-SIN3-023	DX-SIN3-024-A
DX-EMC34-030-L		25	50	DX-LN3-025	1.18	DX-LM3-035	DX-SIN3-032	DX-SIN3-046-A
DX-EMC34-042-L		25	50	DX-LN3-040	0.64	DX-LM3-035	DX-SIN3-032	DX-SIN3-046-A
DX-EMC34-055-L		25	50	DX-LN3-050	0.37	DX-LM3-050	DX-SIN3-048	DX-SIN3-065-A
DX-EMC34-008-L		25	50	DX-LN3-004	7.51	DX-LM3-008	DX-SIN3-004	DX-SIN3-2D5-A
DX-EMC34-008-L		25	50	DX-LN3-004	7.51	DX-LM3-008	DX-SIN3-004	DX-SIN3-004-A
DX-EMC34-008-L		25	50	DX-LN3-006	4.9	DX-LM3-008	DX-SIN3-010	DX-SIN3-006-A
DX-EMC34-008-L		25	50	DX-LN3-010	2.94	DX-LM3-008	DX-SIN3-010	DX-SIN3-013-A
DX-EMC34-016-L		25	50	DX-LN3-016	1.84	DX-LM3-011	DX-SIN3-016	DX-SIN3-013-A
DX-EMC34-030-L		25	50	DX-LN3-025	1.18	DX-LM3-035	DX-SIN3-023	DX-SIN3-024-A
DX-EMC34-030-L		25	50	DX-LN3-025	1.18	DX-LM3-035	DX-SIN3-032	DX-SIN3-046-A
DX-EMC34-042-L		25	50	DX-LN3-040	0.64	DX-LM3-035	DX-SIN3-032	DX-SIN3-046-A
DX-EMC34-055-L		25	50	DX-LN3-050	0.37	DX-LM3-050	DX-SIN3-048	DX-SIN3-065-A

2.5 Variable frequency drive DM1 to 22 kW

DM1 External components

Catalog Number	High Overload (150%)								
	Rated operational current I_e	Optional mains contactor	Internal EMC Filter			External EMC filter			
			Permissible cable length for C1	Permissible cable length for C2	Permissible cable length for C3		Permissible cable length for C1	Permissible cable length for C2	Permissible cable length for C3
	A		m	m	m		m	m	m
3~/3~ 400 V without EMC									
DM1-341D5NB-S20S-EM	1.5	DILM7-10 (230V50HZ,240V60HZ)	0	0	0	DX-EMC34-008	5	50	75
DM1-342D2NB-S20S-EM	2.2	DILM7-10 (230V50HZ,240V60HZ)	0	0	0	DX-EMC34-008	5	50	75
DM1-344D3NB-S20S-EM	4.3	DILM7-10 (230V50HZ,240V60HZ)	0	0	0	DX-EMC34-008	5	50	75
DM1-345D6NB-S20S-EM	5.6	DILM7-10 (230V50HZ,240V60HZ)	0	0	0	DX-EMC34-008	5	50	75
DM1-347D6NB-S20S-EM	7.6	DILM7-10 (230V50HZ,240V60HZ)	0	0	0	DX-EMC34-008	5	50	75
DM1-34012NB-S20S-EM	12	DILM7-10 (230V50HZ,240V60HZ)	0	0	0	DX-EMC34-016	5	50	75
DM1-34016NB-S20S-EM	16	DILM7-10 (230V50HZ,240V60HZ)	0	0	0	DX-EMC34-016	5	50	75
DM1-34023NB-S20S-EM	23	DILM17-10 (230V50HZ,240V60HZ)	0	0	0	DX-EMC34-030	5	50	75
DM1-34031NB-S20S-EM	31	DILM17-10 (230V50HZ,240V60HZ)	0	0	0	DX-EMC34-042	5	50	75
DM1-34038NB-S20S-EM	38	DILM17-10 (230V50HZ,240V60HZ)	0	0	0	DX-EMC34-042	5	50	75
3~/3~ 400 V with EMC									
DM1-341D5EB-S20S-EM	1.5	DILM7-10 (230V50HZ,240V60HZ)	0	5	25	DX-EMC34-008	5	50	75
DM1-342D2EB-S20S-EM	2.2	DILM7-10 (230V50HZ,240V60HZ)	0	5	25	DX-EMC34-008	5	50	75
DM1-344D3EB-S20S-EM	4.3	DILM7-10 (230V50HZ,240V60HZ)	0	5	25	DX-EMC34-008	5	50	75
DM1-345D6EB-S20S-EM	5.6	DILM7-10 (230V50HZ,240V60HZ)	0	5	25	DX-EMC34-008	5	50	75
DM1-347D6EB-S20S-EM	7.6	DILM7-10 (230V50HZ,240V60HZ)	0	5	25	DX-EMC34-008	5	50	75
DM1-34012EB-S20S-EM	12	DILM7-10 (230V50HZ,240V60HZ)	0	5	25	DX-EMC34-016	5	50	75
DM1-34016EB-S20S-EM	16	DILM7-10 (230V50HZ,240V60HZ)	0	5	25	DX-EMC34-016	5	50	75
DM1-34023EB-S20S-EM	23	DILM17-10 (230V50HZ,240V60HZ)	0	5	25	DX-EMC34-030	5	50	75
DM1-34031EB-S20S-EM	31	DILM17-10 (230V50HZ,240V60HZ)	0	5	25	DX-EMC34-042	5	50	75
DM1-34038EB-S20S-EM	38	DILM17-10 (230V50HZ,240V60HZ)	0	5	25	DX-EMC34-042	5	50	75
3~/3~ 575 V without EMC									
DM1-354D5NB-S20S-EM	4.5	DILM7-10 (230V50HZ,240V60HZ)	0	0	0	n.v.			
DM1-357D5NB-S20S-EM	7.5	DILM7-10 (230V50HZ,240V60HZ)	0	0	0	n.v.			
DM1-35010NB-S20S-EM	10	DILM7-10 (230V50HZ,240V60HZ)	0	0	0	n.v.			
DM1-35013NB-S20S-EM	13.5	DILM7-10 (230V50HZ,240V60HZ)	0	0	0	n.v.			
DM1-35018NB-S20S-EM	18	DILM7-10 (230V50HZ,240V60HZ)	0	0	0	n.v.			
DM1-35022NB-S20S-EM	22	DILM7-10 (230V50HZ,240V60HZ)	0	0	0	n.v.			
3~/3~ 575 V with EMC									
DM1-354D5EB-S20S-EM	4.5	DILM7-10 (230V50HZ,240V60HZ)	0	0	25	n.v.			
DM1-357D5EB-S20S-EM	7.5	DILM7-10 (230V50HZ,240V60HZ)	0	0	25	n.v.			
DM1-35010EB-S20S-EM	10	DILM7-10 (230V50HZ,240V60HZ)	0	0	25	n.v.			
DM1-35013EB-S20S-EM	13.5	DILM7-10 (230V50HZ,240V60HZ)	0	0	25	n.v.			
DM1-35018EB-S20S-EM	18	DILM7-10 (230V50HZ,240V60HZ)	0	0	25	n.v.			
DM1-35022EB-S20S-EM	22	DILM7-10 (230V50HZ,240V60HZ)	0	0	25	n.v.			

Notes: n.a. – not available

External EMC filter (low leakage current)				Mains choke		Motor choke	Sine filter	All-pole sine filter
	Permissible cable length for C1	Permissible cable length for C2	Permissible cable length for C3		u_k			
	m	m	m		%			
DX-EMC34-008-L		25	50	DX-LN3-004	7.51	DX-LM3-008	DX-SIN3-004	DX-SIN3-2D5-A
DX-EMC34-008-L		25	50	DX-LN3-004	7.51	DX-LM3-008	DX-SIN3-004	DX-SIN3-2D5-A
DX-EMC34-008-L		25	50	DX-LN3-006	4.9	DX-LM3-008	DX-SIN3-010	DX-SIN3-006-A
DX-EMC34-008-L		25	50	DX-LN3-006	4.9	DX-LM3-008	DX-SIN3-010	DX-SIN3-006-A
DX-EMC34-008-L		25	50	DX-LN3-010	2.94	DX-LM3-008	DX-SIN3-010	DX-SIN3-013-A
DX-EMC34-016-L		25	50	DX-LN3-016	1.84	DX-LM3-016	DX-SIN3-016	DX-SIN3-013-A
DX-EMC34-016-L		25	50	DX-LN3-016	1.84	DX-LM3-016	DX-SIN3-016	DX-SIN3-024-A
DX-EMC34-030-L		25	50	DX-LN3-025	1.18	DX-LM3-035	DX-SIN3-023	DX-SIN3-024-A
DX-EMC34-042-L		25	50	DX-LN3-040	0.64	DX-LM3-035	DX-SIN3-032	DX-SIN3-046-A
DX-EMC34-042-L		25	50	DX-LN3-040	0.64	DX-LM3-050	DX-SIN3-048	DX-SIN3-046-A
DX-EMC34-008-L		25	50	DX-LN3-004	7.51	DX-LM3-008	DX-SIN3-004	DX-SIN3-2D5-A
DX-EMC34-008-L		25	50	DX-LN3-004	7.51	DX-LM3-008	DX-SIN3-004	DX-SIN3-2D5-A
DX-EMC34-008-L		25	50	DX-LN3-006	4.9	DX-LM3-008	DX-SIN3-010	DX-SIN3-006-A
DX-EMC34-008-L		25	50	DX-LN3-006	4.9	DX-LM3-008	DX-SIN3-010	DX-SIN3-006-A
DX-EMC34-008-L		25	50	DX-LN3-010	2.94	DX-LM3-008	DX-SIN3-010	DX-SIN3-013-A
DX-EMC34-016-L		25	50	DX-LN3-016	1.84	DX-LM3-016	DX-SIN3-016	DX-SIN3-013-A
DX-EMC34-016-L		25	50	DX-LN3-016	1.84	DX-LM3-016	DX-SIN3-016	DX-SIN3-024-A
DX-EMC34-030-L		25	50	DX-LN3-025	1.18	DX-LM3-035	DX-SIN3-023	DX-SIN3-024-A
DX-EMC34-042-L		25	50	DX-LN3-040	0.64	DX-LM3-035	DX-SIN3-032	DX-SIN3-046-A
DX-EMC34-042-L		25	50	DX-LN3-040	0.64	DX-LM3-050	DX-SIN3-048	DX-SIN3-046-A
n.v.				DX-LN3-006	4.9	DX-LM3-008	DX-SIN3-010	n.v.
n.v.				DX-LN3-010	2.94	DX-LM3-008	DX-SIN3-010	n.v.
n.v.				DX-LN3-010	2.94	DX-LM3-011	DX-SIN3-010	n.v.
n.v.				DX-LN3-016	1.84	DX-LM3-016	DX-SIN3-016	n.v.
n.v.				DX-LN3-025	1.18	DX-LM3-035	DX-SIN3-023	n.v.
n.v.				DX-LN3-025	1.18	DX-LM3-035	DX-SIN3-023	n.v.
n.v.				DX-LN3-006	4.9	DX-LM3-008	DX-SIN3-010	n.v.
n.v.				DX-LN3-010	2.94	DX-LM3-008	DX-SIN3-010	n.v.
n.v.				DX-LN3-010	2.94	DX-LM3-011	DX-SIN3-010	n.v.
n.v.				DX-LN3-016	1.84	DX-LM3-016	DX-SIN3-016	n.v.
n.v.				DX-LN3-025	1.18	DX-LM3-035	DX-SIN3-023	n.v.
n.v.				DX-LN3-025	1.18	DX-LM3-035	DX-SIN3-023	n.v.

2.5 Variable frequency drive DM1 to 22 kW

Connection examples

Connection example for DM1Pro with the following functions:

① Setpoint input via external analog setpoint
② Setpoint input via keyboard, network, or internal setpoint potentiometer; process value fed back to AI1and use of PID controller
• Dual-channel STO

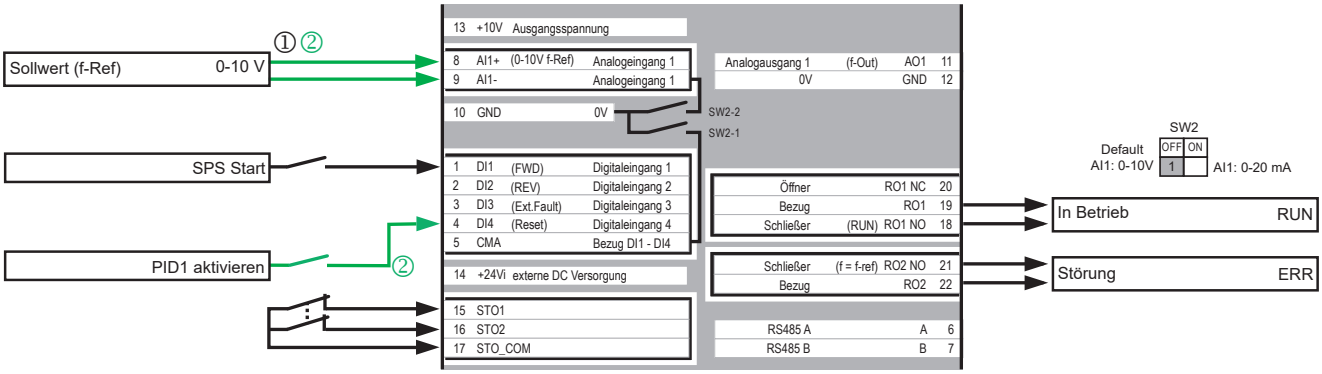

Connection example for master-follower operation in which the follower runs with the same torque as the master. A rigid mechanical coupling is required. For non-rigid couplings, the droop function is used instead of torque forwarding via AO1 to the follower.
The same setpoint input / PID use specifications as for the previous example apply here as well.

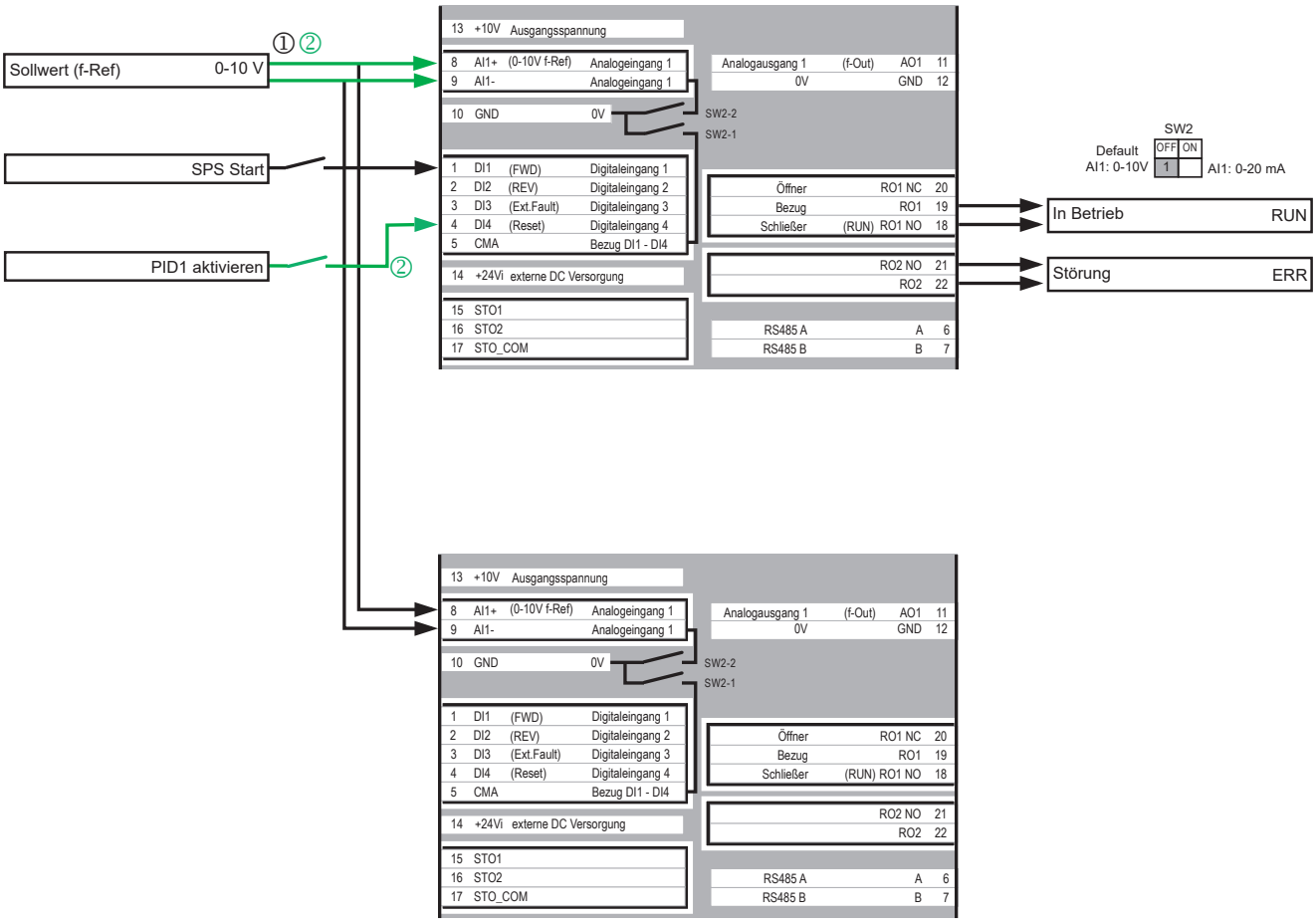

Technical specifications

	Unit	Value
General		
Product standard		IEC/EN 61800-2
Production standard		RoHS, ISO 9001
Security		IEC/EN 61800-5-1:2007/A1:2017; UL 61800-5-1:2012 (Rev. 2018), CSA C22.2 No. 274-17:2017
Radio interference level		IEC/EN 61800-3
Integrated radio interference suppression filter		Yes, C2
Radio interference class (EMC)		C1 (with external filter, for conducted emissions only), C2, C3, depending on the motor cable length, the connected load, and ambient conditions. External radio interference suppression filters (optional) may be necessary.
Radio interference class (EMC), external filters		Optional external radio interference suppression filter for longer motor cable lengths and for use in different EMC environments
Environment (EMC)		1st and 2nd environments as per EN 61800-3
first environment		Yes
second environment		Yes
longest permissible length of motor cable with internal filter		C2 ≤ 5 m | C3 ≤ 25 m
Interference immunity		EN 61800-3:2004+A1-2012, first and second environment
Emissions		EN 61800-3:2004+A1-2012, Category C2
Electrostatic discharge (ESD)		IEC 61000-4-2, 4 kV contact, 8 kV air, Second environment, Criterion B
Fast transients (burst)		IEC 61000-4-4, 2 kV/5 kHz, Second environment, Criterion B
Dielectrical strength		Input to output: 3600 V AC/5100 V DC Input to earth: 2000 V AC/2828 V DC
THD		
((depends on size))		
Acoustic		
Average sound level (fan); sound power level in dB(A)		TBD
Sound level		EN 61800-5-1 (2007)
Climatic proofing		< 95%, average relative humidity (RH), non-condensing, non-corrosive
Ambient temperature		
110% overload (1 min./10 min.)	°C	-10 – +40 (max. +55 with 1% derating per Kelvin temperature rise)
150% overload (1 min./10 min.)	°C	-10 – +50 (max. +60 with 1% derating per Kelvin temperature rise)
T_{min}	°C	-10
T_{max}	°C	60
Ambient conditions		IEC 60068-2-60
Ambient air in conformity with IEC/EN 60721-3-3		3C2, 3S2
Storage temperature	°C	-40 - +70
Altitude		Depends on the device model
permissible network configurations		TN-S, TN-C, TN-C-S, TT, IT
Mounting position		vertical
Protection type		EN 60529:1992
DM1-…-C00C		IP20 / NEMA Type 0, IP21/NEMA 1 with option
Busbar tag shroud		BGV A3 (VBG4, finger- and back-of-hand proof)
Overvoltage category		III
Pollution degree		2
Mechanical shock resistance		EN 61800-5-1, EN 60068-2-27 | UPS drop test (for weights inside the UPS frame) | Storage and transportation: maximum 15 g, 11 ms (inside the packaging)

2.5 Variable frequency drive DM1 to 22 kW

Technical specifications

	Unit	Value
Main circuit		
Rated operating voltage (three-phase)		
DM1-11…	V	115 (-10%/+10%)
DM1-12…	V	208 (-10%) - 240 (+10%)
DM1-32…	V	208 (-10%) - 240 (+10%)
DM1-34…	V	380 (-10%) - 500 (+10%)
DM1-35…	V	500 (-10%) - 600 (+10%)
Tolerance up	%	10
Tolerance dwn	%	15
Mains frequency	Hz	50/60
Tolerance	%	10
Mains frequency range	Hz	45 - 66
Mains switch-on frequency		Maximum of one time every 60 seconds
Overload withstand capability		Overload cycle for 60 s every 600 s
I_L (1 min./10 min.)	%	110
I_H (1 min./10 min.)	%	150
Comment		Rated operational current for a standard switching frequency and an ambient temperature of +50°C for a 150% overload and +40°C for a 110% overload
Short-time overload withstand capability (2 sec / 20 sec)	%	200
Peak-Overload cycle		for 2 seconds every 20 seconds
Output voltage at U_e	V	0 - U_{in}
Variable frequency drive functions		
Ramp times		
Startup	s	0.1 - 3000
Delay	s	0.1 - 3000
Control types		All DM1: V/Hz control | DM1Pro: | Speed control with slip compensation | Sensorless vector control (SLV) | Torque control | Permanent magnet motor control
Inputs / outputs		
Digital Inputs		4, parameterizable, max. 30 V DC
Digital Outputs		0
Analog inputs		1, parameterizable, 0 - 10 V DC, 2 - 10 V DC, 0/4 - 20 mA
Analog Outputs		1, parameterizable, 0 - 10 V
Relay		3 A (240 V AC) / 3 A (24 V DC) | DM1: 1 C/O, parameterizable | DM1Pro: 1 C/O and 1 N/O, parameterizable
Communication		
on-board		All DM1: Modbus RTU | DM1Pro: Modbus TCP, BACnet MS/TP, Bacnet TCP, Ethernet IP
optional		Profibus, CAN, DeviceNet, SmartWire-DT, PROFINET

Dimensions

DM1 Pro

Frame size 1

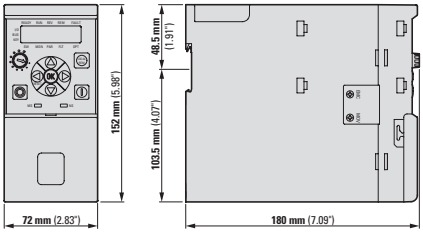

Frame size 2

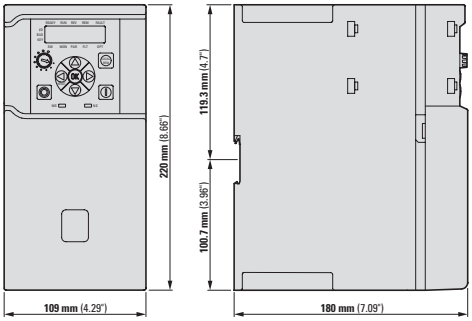

Frame size 3

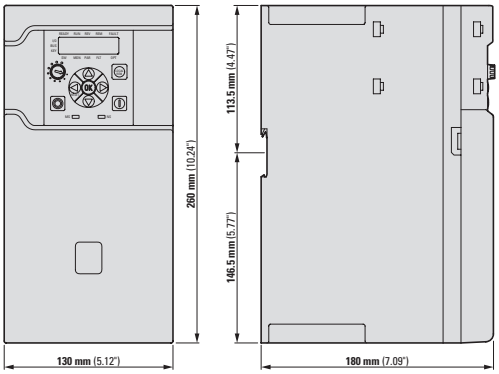

Frame size 4

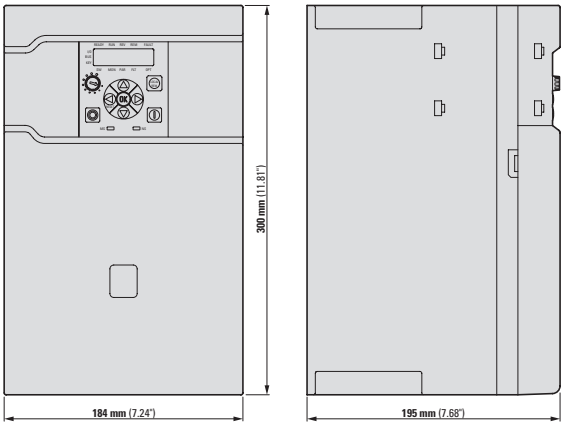

DM1

Frame size 1

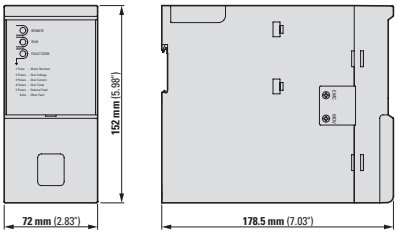

Frame size 2

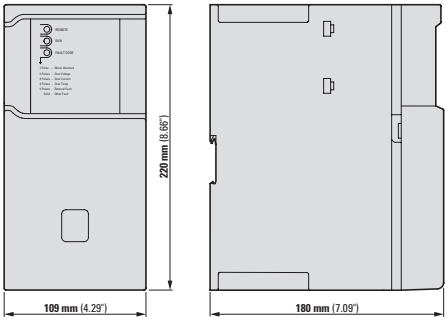

Frame size 3

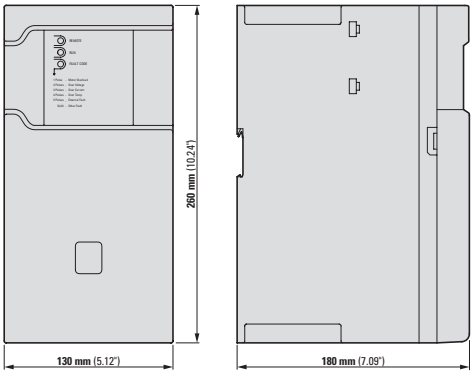

Frame size 4

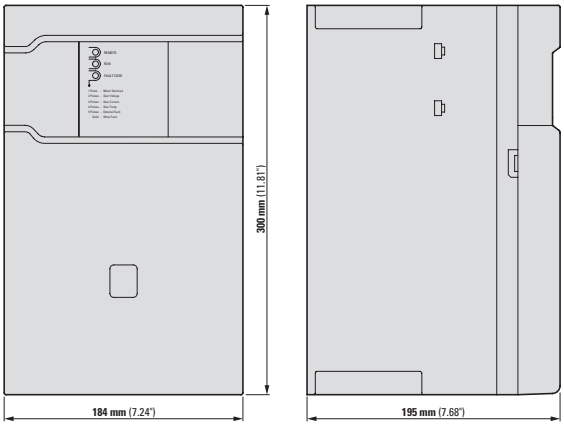

IP21 / NEMA1 Kit DM1

Frame size 1

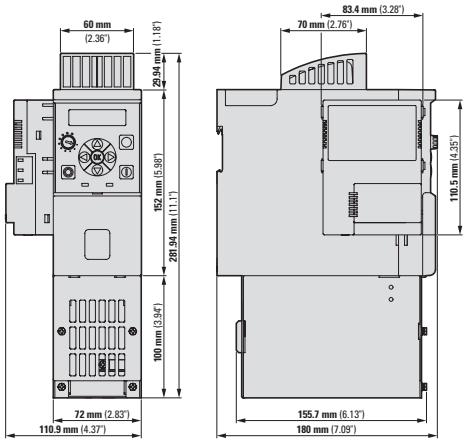

Frame size 2

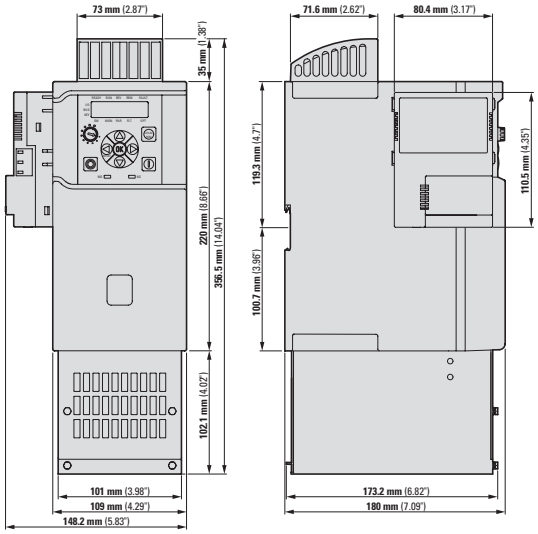

Frame size 3

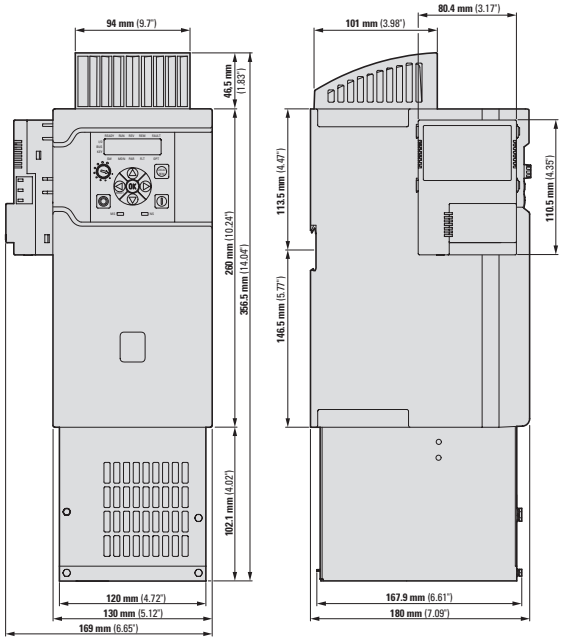

Frame size 4

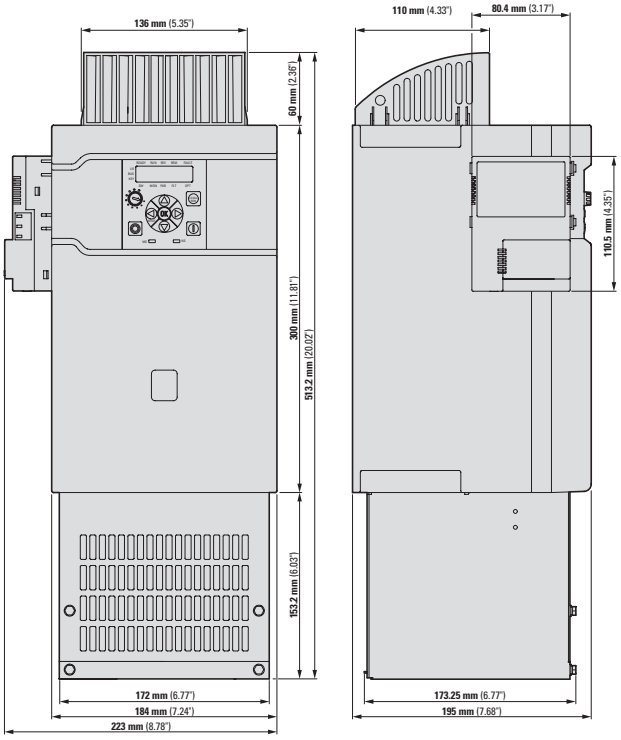

IP21 / NEMA1 Kit DM1 100 kA UL Plenum rating

Frame size 1

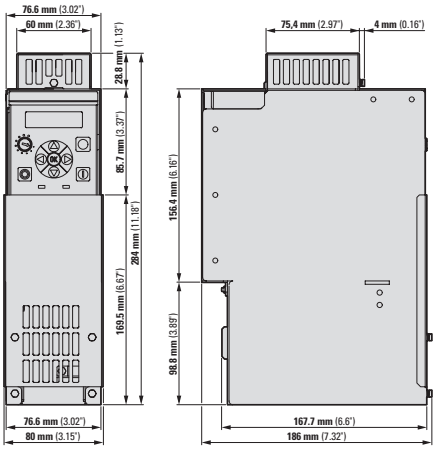

Frame size 2

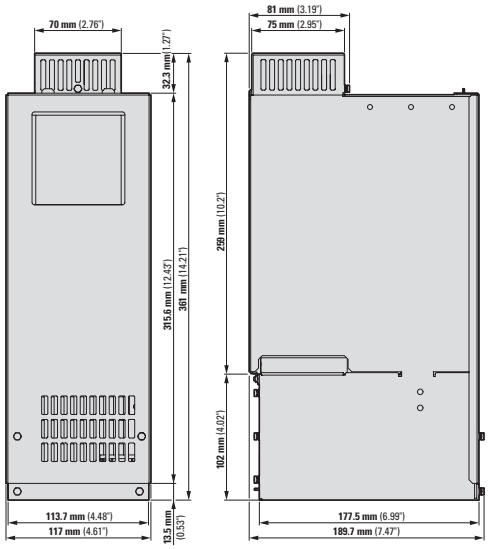

Frame size 3

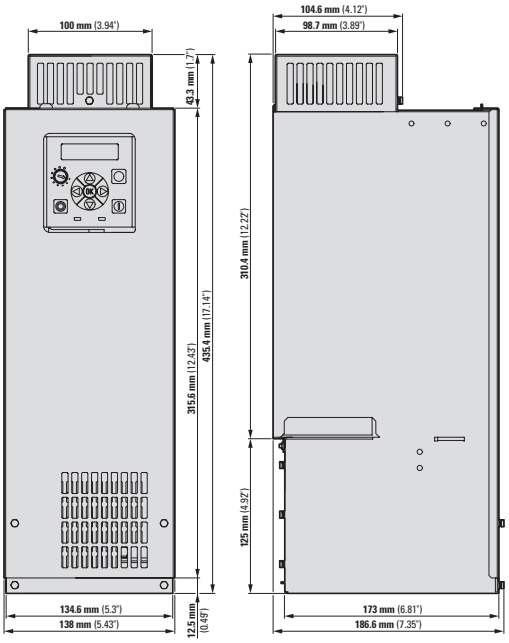

Frame size 4

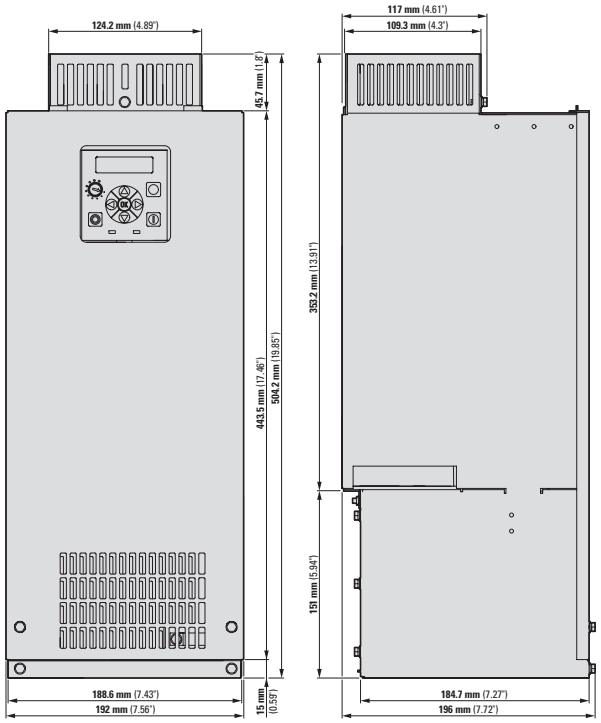

DM1 Pro (PROFIBUS, CANOPEN, PROFINET) network interfaces

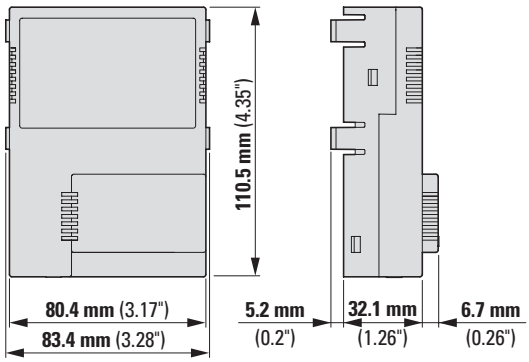



PowerXL Variable Frequency Drive DG1 General Purpose Drive

PowerXL DG1 general-purpose drives are variable frequency drives in Eaton's "Next-Generation PowerXL" series. They are specifically designed for modern, sophisticated applications:
In fact, energy-saving algorithms, high short-circuit values, and a heavy-duty design all enable them to provide maximum efficiency, safety, and reliability.

Performance range:

- 0.75 - 90 kW (U_e: 3~ 230 V, U_2: 3~ 230 V)
- 0.75 - 160 kW (U_e: 3~ 400 V, U_2: 3~ 400 V)
- 2.2 - 250 HP (U_e: 3~ 575 V, U_2: 3~ 575 V)

Applications:

- Multi-pump applications
- HVAC
- Roller and chain conveyors
- Compressors, mills
- Production machines
- Centrifuges and extruders
- Traction drives, conveyor belts
- Sawing, drilling, dosing unit drives
- Chemical and primary industries
- Water jet cutting, crushers

Features:

- Ease of use: Startup Wizard, inControl PC Tool software, four built-in applications, diagnostics, local/remote button, removable keypad with copy/paste functionality.
- Communicative: Modbus RTU, Modbus TCP, Ethernet IP and BacNet MS/TP Standard on each device. In addition, extensive I/O above the average for this device class.
- Efficiency: Active energy control algorithm, 5% DC choke, input surge protection, EMC filter built-in
- Rugged and reliable: Dual rating with high (CT) and low (VT) overload capability, conformal coated boards, brake chopper circuit.
- Durable metal power section, 50°C rating (60°C de-rating)
- Removable keypad rated IP54
- Global acceptance: UL, CE, cUL, RoHS, RCM

Accessory:

- Communication modules (PROFIBUS, PROFINET, CANopen, etc.)
- I/O expansions
- External keypad
- Motor chokes
- Sine filter
- Braking resistances
- Power Xpert inControl operating software
- DG1-Remote Keypad

For more information, visit:
www.Eaton.com/DG1



2.6 Variable frequency drive DG1 to 160 kW

System overview 186
Key to type references 187
Ordering 188
DG1 for three-phase motors 230 V, three-phase 188
DG1 for three-phase motors 400 V, three-phase 190
DG1Pro for three-phase motors 400 V, three-phase 192
DG1 for three-phase motors 575 V, three-phase 193
Options 195
Engineering 196
DG1 External components 196
Technical specifications 208
Connection examples 210
Dimensions and weights 211

System overview



DG1-… 1
→ Page 188

Mounting frame DXG-ACC-FR… 2
→ Page 195

EMV filter DX-EMC… 3
→ Page 217

Braking resistances DX-BR… 4
→ Page 222

DX-LN…/DX-LM…, mains/motor chokes, DX-PHF… harmonic filters, DX-SIN… sine filters 5
→ Page 215
→ Page 216
→ Page 219
→ Page 220

Expansions and communication cards DXG-EXT-… DXG-NET-… 6
→ Page 195

External keypad DXG-KEY-… 7
→ Page 195

Key to type references

DG 1 - 3 4 4D3 F B - C 20 C

Device series
DG = General Purpose Drive

Produkt Generation
1 = First Generation

Stages
1 = 1~ input / 3~ output
3 = 3~ input / 3+ output

Input- / output voltages
1 = 115 V (100 - 120 V +10%/-15%)
2 = 230 V (200 - 240 V +10%/-15%)
4 = 400 V (380 - 500 V +10%/-15%)
5 = 575 V (525 - 600 V +10%/-15%)

Sizes
FR0
FR1
FR2
FR3
FR4
FR5
FR6

3~, 200 - 240 V
3D7 = 3.7 A, 0.75 / 1.1 kW, 0.75 / 1 HP
4D8 = 4.8 A, 1.1 / 1.5 kW, 1 / 1.5 HP
6D6 = 6.6 A, 1.5 / 1.5 kW, 1.5 / 2 HP
7D8 = 7.8 A, 1.5 / 2.2 kW, 2 / 3 HP
011 = 11 A, 2.2 / 3 kW, 3 / 3 HP
012 = 12.5 A, 3 / 4 kW, 3 / 5 HP
017 = 17.5 A, 4 / 5.5 kW, 5 / 7.5 HP
025 = 25 A, 5.5 / 7.5 kW, 7.5 / 10 HP
031 = 31 A, 7.5 / 11 kW, 10 / 15 HP
048 = 48 A, 11 / 15 kW, 15 / 20 HP
061 = 61 A, 15 / 22 kW, 20 / 25 HP
075 = 75 A, 22 / 22 kW, 25 / 30 HP
088 = 88 A, 22 / 30 kW, 30 / 40 HP
114 = 114 A, 30 / 45 kW, 40 / 50 HP
143 = 143 A, 45 / 45 kW, 50 / 60 HP
170 = 170 A, 45 / 55 kW, 60 / 75 HP
211 = 211 A, 55 / 75 kW, 75 / 100 HP
248 = 248 A, 75 / 90 kW, 100 / 125 HP

3~, 380 - 480 V
2D2 = 2.2 A, 0.75 / 1.1 kW, 1 / 1.5 HP
3D3 = 3.3 A, 1.1 / 1.5 kW, 1.5 / 2 HP
4D3 = 4.3 A, 1.5 / 2.2 kW, 2 / 3 HP
5D6 = 5.6 A, 2.2 / 3 kW, 3 / 5 HP
7D6 = 7.6 A, 3 / 4 kW, 5 / 5 HP
9D0 = 9 A, 4 / 5.5 kW, 5 / 7.5 HP
012 = 12 A, 5.5 / 7.5 kW, 7.5 / 10 HP
016 = 16 A, 7.5 / 11 kW, 10 / 15 HP
023 = 23 A, 11 / 15 kW, 15 / 20 HP
031 = 31 A, 15 / 18.5 kW, 20 / 25 HP
038 = 38 A, 18.5 / 22 kW, 25 / 30 HP
046 = 46 A, 22 / 30 kW, 30 / 40 HP
061 = 61 A, 30 / 37 kW, 40 / 50 HP
072 = 72 A, 37 / 45 kW, 50 / 60 HP
087 = 87 A, 45 / 55 kW, 60 / 75 HP
105 = 105 A, 55 / 75 kW, 75 / 100 HP
140 = 140 A, 75 / 90 kW, 100 / 125 HP
170 = 170 A, 90 / 110 kW, 125 / 150 HP
205 = 205 A, 110 / 132 kW, 150 / 200 HP
245 = 245 A, 132 / 160 kW, 200 / 250 HP

3~, 525 - 600 V
3D3 = 3.3 A, 1.5 / 2.2 kW, 2 / 3 HP
4D5 = 4.5 A, 2.2 / 4 kW, 3 / 5 HP
7D5 = 7.5 A, 4 / 5.5 kW, 5 / 7.5 HP
010 = 10 A, 5.5 / 7.5 kW, 7.5 / 10 HP
013 = 13.5 A, 7.5 / 11 kW, 10 / 15 HP
018 = 18 A, 11 / 15 kW, 15 / 20 HP
022 = 22 A, 15 / 18.5 kW, 20 / 25 HP
027 = 27 A, 18.5 / 22 kW, 25 / 30 HP
034 = 34 A, 22 / 30 kW, 30 / 40 HP
041 = 41 A, 30 / 37 kW, 40 / 50 HP
052 = 52 A, 37 / 45 kW, 50 / 60 HP
062 = 62 A, 45 / 55 kW, 60 / 75 HP
080 = 80 A, 55 / 75 kW, 75 / 100 HP
100 = 100 A, 75 / 90 kW, 100 / 125 HP
125 = 125 A, 90 / 110 kW, 125 / 150 HP
144 = 144 A, 110 / 160 kW, 150 / 200 HP
208 = 208 A, 160 / 200 kW, 200 / 250 HP

Control options
S = STO with SIL2, EtherNet/IP, Modbus TCP on-board, optional card connection (DM1Pro)
C = Coated PCBs (3C2, 3S2)

Protection type
20 = IP20

Display options
N = no display
S = multi-segment LCD display (DM1Pro)
C = full text LCD display (DG1)

Internal Brake Chopper
N = no brake chopper
B = internal brake chopper

Internal EMC Filter
F = internal EMC filter & DC link choke
D = Internal DC link choke, no EMC filter
E = internal EMC filter

2.6 Variable frequency drive DG1 to 160 kW

DG1 for three-phase motors 230 V, three-phase

Ordering

Rated operational current[1]	Assigned motor output [1) 2) 3)]		Rated operational current[1]	Assigned motor output [1) 2) 3)]		Configuration			Frame size	Protection type	**Catalog Number** Article no.	Std. pack
I_n = 150% I_e			I_n = 110% I_e			Radio interference suppression filter	Brake chopper	DC choke				
A	kW	HP	A	kW	HP							
U_e 230 V AC, three-phase / U_2 230 V AC, three-phase, with BU, IP20												
Mains voltage (50/60Hz) U_{LN}: 200 (-15%) - 240 (+10%) V												
3.7	0.75	0.75	4.8	1.1	1	✓	✓	–	FS0	IP20/NEMA0	**DG1-323D7EB-C20C** 9701-0200	1 unit
4.8	1.1	1	6.6	1.5	1.5	✓	✓	–			**DG1-324D8EB-C20C** 9701-0201	
6.6	1.5	1.5	7.8	1.5	2	✓	✓	–			**DG1-326D6EB-C20C** 9701-0202	
U_e 230 V AC, three-phase / U_2 230 V AC, three-phase, with BU, IP21												
Mains voltage (50/60Hz) U_{LN}: 200 (-15%) - 240 (+10%) V												
3.7	0.75	0.75	4.8	1.1	1	✓	✓	✓	FS1	IP21/NEMA1	**DG1-323D7FB-C21C** 9701-1002-00P	1 unit
4.8	1.1	1	6.6	1.5	1.5	✓	✓	✓			**DG1-324D8FB-C21C** 9701-1004-00P	
6.6	1.5	1.5	7.8	1.5	2	✓	✓	✓			**DG1-326D6FB-C21C** 9701-1006-00P	
7.8	1.5	2	11	2.2	3	✓	✓	✓			**DG1-327D8FB-C21C** 9701-1008-00P	
11	2.2	3	12.5	3	3	✓	✓	✓			**DG1-32011FB-C21C** 9701-1001-00P	
12.5	3	3	17.5	4	5	✓	✓	✓	FS2		**DG1-32012FB-C21C** 9701-2002-00P	
17.5	4	5	25	5.5	7.5	✓	✓	✓			**DG1-32017FB-C21C** 9701-2004-00P	
25	5.5	7.5	31	7.5	10	✓	✓	✓			**DG1-32025FB-C21C** 9701-2001-00P	
31	7.5	10	48	11	15	✓	✓	✓	FS3		**DG1-32031FB-C21C** 9701-3002-00P	
48	11	15	61	15	20	✓	✓	✓			**DG1-32048FB-C21C** 9701-3001-00P	
61	15	20	75	22	25	✓	✓	✓	FS4		**DG1-32061FB-C21C** 9701-4002-00P	
75	22	25	88	22	30	✓	✓	✓			**DG1-32075FB-C21C** 9701-4006-00P	
88	22	30	114	30	40	✓	✓	✓			**DG1-32088FB-C21C** 9701-4010-00P	
114	30	40	143	45	50	✓	✓	✓	FS5		**DG1-32114FB-C21C** 9701-5002-00P	
143	45	50	170	45	60	✓	✓	✓			**DG1-32143FB-C21C** 9701-5006-00P	
170	45	60	211	55	75	✓	✓	✓			**DG1-32170FB-C21C** 9701-5010-00P	
211	55	75	261	75	100	✓	✓	✓	FS6		**DG1-32211FB-C21C** 9701-6001-00P	
248	75	100	312	90	125	✓	✓	✓			**DG1-32248FB-C21C** 9701-6005-00P	
U_e 230 V AC, three-phase / U_2 230 V AC, three-phase, without BU, IP21												
Mains voltage (50/60Hz) U_{LN}: 200 (-15%) - 240 (+10%) V												
61	15	20	75	22	25	✓	–	✓	FS4	IP21/NEMA1	**DG1-32061FN-C21C** 9701-4004-00P	1 unit
75	22	25	88	22	30	✓	–	✓			**DG1-32075FN-C21C** 9701-4008-00P	
88	22	30	114	30	40	✓	–	✓			**DG1-32088FN-C21C** 9701-4001-00P	
114	30	40	143	45	50	✓	–	✓	FS5		**DG1-32114FN-C21C** 9701-5004-00P	
143	45	50	170	45	60	✓	–	✓			**DG1-32143FN-C21C** 9701-5008-00P	
170	45	60	211	55	75	✓	–	✓			**DG1-32170FN-C21C** 9701-5001-00P	
211	55	75	261	75	100	✓	–	✓	FS6		**DG1-32211FN-C21C** 9701-6003-00P	
248	75	100	312	90	125	✓	–	✓			**DG1-32248FN-C21C** 9701-6007-00P	

Notes

[1] Overload cycle for 60 s every 600 s, 150% at 50°C ambient temperature, 110% at 40°C ambient temperature
[2] For normal internally and externally ventilated four-pole three-phase asynchronous motors with 1500 rpm at 50 Hz and 1800 rpm at 60 Hz
[3] At 400 V, 50 Hz/at 480 V, 60 Hz

Rated operational current[1]	Assigned motor output [1) 2) 3)]		Rated operational current[1]	Assigned motor output [1) 2) 3)]		Configuration			Frame size	Protection type	**Catalog Number** Article no.	Std. pack
I_n = 150% I_e			I_n = 110% I_e			Radio interference suppression filter	Brake chopper	DC choke				
A	kW	HP	A	kW	HP							
U_e 230 V AC, three-phase / U_2 230 V AC, three-phase, with BU, IP54												
Mains voltage (50/60Hz) U_{LN}: 200 (-15%) - 240 (+10%) V												
3.7	0.75	0.75	4.8	1.1	1	✓	✓	✓	FS1	IP54/NEMA12	**DG1-323D7FB-C54C** 9701-1101-00P	1 unit
4.8	1.1	1	6.6	1.5	1.5	✓	✓	✓			**DG1-324D8FB-C54C** 9701-1103-00P	
6.6	1.5	1.5	7.8	1.5	2	✓	✓	✓			**DG1-326D6FB-C54C** 9701-1105-00P	
7.8	1.5	2	11	2.2	3	✓	✓	✓			**DG1-327D8FB-C54C** 9701-1107-00P	
11	2.2	3	12.5	3	3	✓	✓	✓			**DG1-32011FB-C54C** 9701-1109-00P	
12.5	3	3	17.5	4	5	✓	✓	✓	FS2		**DG1-32012FB-C54C** 9701-2101-00P	
17.5	4	5	25	5.5	7.5	✓	✓	✓			**DG1-32017FB-C54C** 9701-2103-00P	
25	5.5	7.5	31	7.5	10	✓	✓	✓			**DG1-32025FB-C54C** 9701-2105-00P	
31	7.5	10	48	11	15	✓	✓	✓	FS3		**DG1-32031FB-C54C** 9701-3101-00P	
48	11	15	61	15	20	✓	✓	✓			**DG1-32048FB-C54C** 9701-3103-00P	
61	15	20	75	22	25	✓	✓	✓	FS4		**DG1-32061FB-C54C** 9701-4101-00P	
75	22	25	88	22	30	✓	✓	✓			**DG1-32075FB-C54C** 9701-4105-00P	
88	22	30	114	30	40	✓	✓	✓			**DG1-32088FB-C54C** 9701-4109-00P	
114	30	40	143	45	50	✓	✓	✓	FS5		**DG1-32114FB-C54C** 9701-5101-00P	
143	45	50	170	45	60	✓	✓	✓			**DG1-32143FB-C54C** 9701-5105-00P	
170	45	60	211	55	75	✓	✓	✓			**DG1-32170FB-C54C** 9701-5109-00P	
211	55	75	261	75	100	✓	✓	✓	FS6		**DG1-32211FB-C54C** 9701-6101-00P	
248	75	100	312	90	125	✓	✓	✓			**DG1-32248FB-C54C** 9701-6105-00P	
U_e 230 V AC, three-phase / U_2 230 V AC, three-phase, without BU, IP54												
Mains voltage (50/60Hz) U_{LN}: 200 (-15%) - 240 (+10%) V												
61	15	20	75	22	25	✓	–	✓	FS4	IP54/NEMA12	**DG1-32061FN-C54C** 9701-4103-00P	1 unit
75	22	25	88	22	30	✓	–	✓			**DG1-32075FN-C54C** 9701-4107-00P	
88	22	30	114	30	40	✓	–	✓			**DG1-32088FN-C54C** 9701-4111-00P	
114	30	40	143	45	50	✓	–	✓	FS5		**DG1-32114FN-C54C** 9701-5103-00P	
143	45	50	170	45	60	✓	–	✓			**DG1-32143FN-C54C** 9701-5107-00P	
170	45	60	211	55	75	✓	–	✓			**DG1-32170FN-C54C** 9701-5111-00P	
211	55	75	261	75	100	✓	–	✓	FS6		**DG1-32211FN-C54C** 9701-6103-00P	
248	75	100	312	90	125	✓	–	✓			**DG1-32248FN-C54C** 9701-6107-00P	

Notes

[1)] Overload cycle for 60 s every 600 s, 150% at 50°C ambient temperature, 110% at 40°C ambient temperature
[2)] For normal internally and externally ventilated four-pole three-phase asynchronous motors with 1500 rpm at 50 Hz and 1800 rpm at 60 Hz
[3)] At 400 V, 50 Hz/at 480 V, 60 Hz

2.6 Variable frequency drive DG1 to 160 kW

DG1 for three-phase motors 400 V, three-phase

Rated operational current[1]	Assigned motor output [1) 2) 3)]		Rated operational current[1]	Assigned motor output [1) 2) 3)]		Configuration			Frame size	Protection type	**Catalog Number** Article no.	Std. pack
I_n = 150% I_e			I_n = 110% I_e			Radio interference suppression filter	Brake chopper	DC choke				
A	kW	HP	A	kW	HP							
U_e 400 V AC, three-phase / U_2 400 V AC, three-phase, with BU, IP20												
Mains voltage (50/60Hz) U_{LN}: 380 (-15%) - 500 (+10%) V												
2.2	0.75	1	3.3	1.1	1.5	✓	✓	–	FS0	IP20/NEMA0	**DG1-342D2EB-C20C** 9702-0200	1 unit
3.3	1.1	1.5	4.3	1.5	2	✓	✓	–			**DG1-343D3EB-C20C** 9702-0201	
4.3	1.5	2	5.6	2.2	3	✓	✓	–			**DG1-344D3EB-C20C** 9702-0202	
5.6	2.2	3	7.6	3	5	✓	✓	–			**DG1-345D6EB-C20C** 9702-0203	
U_e 400 V AC, three-phase / U_2 400 V AC, three-phase, with BU, IP21												
Mains voltage (50/60Hz) U_{LN}: 380 (-15%) - 500 (+10%) V												
2.2	0.75	1	3.3	1.1	1.5	✓	✓	✓	FS1	IP21/NEMA1	**DG1-342D2FB-C21C** 9702-1002-00P	1 unit
3.3	1.1	1.5	4.3	1.5	2	✓	✓	✓			**DG1-343D3FB-C21C** 9702-1004-00P	
4.3	1.5	2	5.6	2.2	3	✓	✓	✓			**DG1-344D3FB-C21C** 9702-1006-00P	
5.6	2.2	3	7.6	3	5	✓	✓	✓			**DG1-345D6FB-C21C** 9702-1008-00P	
7.6	3	5	9	4	5	✓	✓	✓			**DG1-347D6FB-C21C** 9702-1001-00P	
9	4	5	12	5.5	7.5	✓	✓	✓			**DG1-349D0FB-C21C** 9702-1011-00P	
12	5.5	7.5	16	7.5	10	✓	✓	✓	FS2		**DG1-34012FB-C21C** 9702-2002-00P	
16	7.5	10	23	11	15	✓	✓	✓			**DG1-34016FB-C21C** 9702-2004-00P	
23	11	15	31	15	20	✓	✓	✓			**DG1-34023FB-C21C** 9702-2001-00P	
31	15	20	38	18.5	25	✓	✓	✓	FS3		**DG1-34031FB-C21C** 9702-3002-00P	
38	18.5	25	46	22	30	✓	✓	✓			**DG1-34038FB-C21C** 9702-3004-00P	
46	22	30	61	30	40	✓	✓	✓			**DG1-34046FB-C21C** 9702-3001-00P	
61	30	40	72	37	50	✓	✓	✓	FS4		**DG1-34061FB-C21C** 9702-4002-00P	
72	37	50	87	45	60	✓	✓	✓			**DG1-34072FB-C21C** 9702-4006-00P	
87	45	60	105	55	75	✓	✓	✓			**DG1-34087FB-C21C** 9702-4010-00P	
105	55	75	140	75	100	✓	✓	✓	FS5		**DG1-34105FB-C21C** 9702-5002-00P	
140	75	100	170	90	125	✓	✓	✓			**DG1-34140FB-C21C** 9702-5006-00P	
170	90	125	205	110	150	✓	✓	✓			**DG1-34170FB-C21C** 9702-5010-00P	
205	110	150	261	132	200	✓	✓	✓	FS6		**DG1-34205FB-C21C** 9702-6001-00P	
245	132	200	310	160	250	✓	✓	✓			**DG1-34245FB-C21C** 9702-6005-00P	

Notes

[1)] Overload cycle for 60 s every 600 s, 150% at 50°C ambient temperature, 110% at 40°C ambient temperature
[2)] For normal internally and externally ventilated four-pole three-phase asynchronous motors with 1500 rpm at 50 Hz and 1800 rpm at 60 Hz
[3)] At 400 V, 50 Hz/at 480 V, 60 Hz

Rated operational current[1]	Assigned motor output [1) 2) 3)]		Rated operational current[1]	Assigned motor output [1) 2) 3)]		Configuration			Frame size	Protection type	**Catalog Number** Article no.	Std. pack
I_n = 150% I_e			I_n = 110% I_e			Radio interference suppression filter	Brake chopper	DC choke				
A	kW	HP	A	kW	HP							
U_e 400 V AC, three-phase / U_2 400 V AC, three-phase, without BU, IP21												
Mains voltage (50/60Hz) U_{LN}: 380 (-15%) - 500 (+10%) V												
61	30	40	72	37	50	✓	–	✓	FS4	IP21/NEMA1	**DG1-34061FN-C21C** 9702-4004-00P	1 unit
72	37	50	87	45	60	✓	–	✓			**DG1-34072FN-C21C** 9702-4008-00P	
87	45	60	105	55	75	✓	–	✓			**DG1-34087FN-C21C** 9702-4001-00P	
105	55	75	140	75	100	✓	–	✓	FS5		**DG1-34105FN-C21C** 9702-5004-00P	
140	75	100	170	90	125	✓	–	✓			**DG1-34140FN-C21C** 9702-5008-00P	
170	90	125	205	110	150	✓	–	✓			**DG1-34170FN-C21C** 9702-5001-00P	
205	110	150	261	132	200	✓	–	✓	FS6		**DG1-34205FN-C21C** 9702-6003-00P	
245	132	200	310	160	250	✓	–	✓			**DG1-34245FN-C21C** 9702-6007-00P	

Notes

[1)] Overload cycle for 60 s every 600 s, 150% at 50°C ambient temperature, 110% at 40°C ambient temperature
[2)] For normal internally and externally ventilated four-pole three-phase asynchronous motors with 1500 rpm at 50 Hz and 1800 rpm at 60 Hz
[3)] At 400 V, 50 Hz/at 480 V, 60 Hz

2.6 Variable frequency drive DG1 to 160 kW

DG1Pro for three-phase motors 400 V, three-phase

Rated operational current[1]	Assigned motor output [1) 2) 3)]		Rated operational current[1]	Assigned motor output [1) 2) 3)]		Configuration			Frame size	Protection type	**Catalog Number** Article no.	Std. pack
I_n = 150% I_e			I_n = 110% I_e			Radio interference suppression filter	Brake chopper	DC choke				
A	kW	HP	A	kW	HP							
U_e 400 V AC, three-phase / U_2 400 V AC, three-phase, with BU, IP54												
Mains voltage (50/60Hz) U_{LN}: 380 (-15%) - 500 (+10%) V												
2.2	0.75	1	3.3	1.1	1.5	✓	✓	✓	FS1	IP54/NEMA12	**DG1-342D2FB-C54C** 9702-1101-00P	1 unit
3.3	1.1	1.5	4.3	1.5	2	✓	✓	✓			**DG1-343D3FB-C54C** 9702-1103-00P	
4.3	1.5	2	5.6	2.2	3	✓	✓	✓			**DG1-344D3FB-C54C** 9702-1105-00P	
5.6	2.2	3	7.6	3	5	✓	✓	✓			**DG1-345D6FB-C54C** 9702-1107-00P	
7.6	3	5	9	4	5	✓	✓	✓			**DG1-347D6FB-C54C** 9702-1109-00P	
9	4	5	12	5.5	7.5	✓	✓	✓			**DG1-349D0FB-C54C** 9702-1111-00P	
12	5.5	7.5	16	7.5	10	✓	✓	✓	FS2		**DG1-34012FB-C54C** 9702-2101-00P	
16	7.5	10	23	11	15	✓	✓	✓			**DG1-34016FB-C54C** 9702-2103-00P	
23	11	15	31	15	20	✓	✓	✓			**DG1-34023FB-C54C** 9702-2105-00P	
31	15	20	38	18.5	25	✓	✓	✓	FS3		**DG1-34031FB-C54C** 9702-3101-00P	
38	18.5	25	46	22	30	✓	✓	✓			**DG1-34038FB-C54C** 9702-3103-00P	
46	22	30	61	30	40	✓	✓	✓			**DG1-34046FB-C54C** 9702-3105-00P	
61	30	40	72	37	50	✓	✓	✓	FS4		**DG1-34061FB-C54C** 9702-4101-00P	
72	37	50	87	45	60	✓	✓	✓			**DG1-34072FB-C54C** 9702-4105-00P	
87	45	60	105	55	75	✓	✓	✓			**DG1-34087FB-C54C** 9702-4109-00P	
105	55	75	140	75	100	✓	✓	✓	FS5		**DG1-34105FB-C54C** 9702-5101-00P	
140	75	100	170	90	125	✓	✓	✓			**DG1-34140FB-C54C** 9702-5105-00P	
170	90	125	205	110	150	✓	✓	✓			**DG1-34170FB-C54C** 9702-5109-00P	
205	110	150	261	132	200	✓	✓	✓	FS6		**DG1-34205FB-C54C** 9702-6101-00P	
245	132	200	310	160	250	✓	✓	✓			**DG1-34245FB-C54C** 9702-6105-00P	
U_e 400 V AC, three-phase / U_2 400 V AC, three-phase, without BU, IP54												
Mains voltage (50/60Hz) U_{LN}: 380 (-15%) - 500 (+10%) V												
61	30	40	72	37	50	✓	–	✓	FS4	IP54/NEMA12	**DG1-34061FN-C54C** 9702-4103-00P	1 unit
72	37	50	87	45	60	✓	–	✓			**DG1-34072FN-C54C** 9702-4107-00P	
87	45	60	105	55	75	✓	–	✓			**DG1-34087FN-C54C** 9702-4111-00P	
105	55	75	140	75	100	✓	–	✓	FS5		**DG1-34105FN-C54C** 9702-5103-00P	
140	75	100	170	90	125	✓	–	✓			**DG1-34140FN-C54C** 9702-5107-00P	
170	90	125	205	110	150	✓	–	✓			**DG1-34170FN-C54C** 9702-5111-00P	
205	110	150	261	132	200	✓	–	✓	FS6		**DG1-34205FN-C54C** 9702-6103-00P	
245	132	200	310	160	250	✓	–	✓			**DG1-34245FN-C54C** 9702-6107-00P	

Notes

[1)] Overload cycle for 60 s every 600 s, 150% at 50°C ambient temperature, 110% at 40°C ambient temperature
[2)] For normal internally and externally ventilated four-pole three-phase asynchronous motors with 1500 rpm at 50 Hz and 1800 rpm at 60 Hz
[3)] At 400 V, 50 Hz/at 480 V, 60 Hz

Rated operational current[1]	Assigned motor output [1) 2) 3)]		Rated operational current[1]	Assigned motor output [1) 2) 3)]		Configuration			Frame size	Protection type	**Catalog Number** Article no.	Std. pack
I_n = 150% I_e			I_n = 110% I_e			Radio interference suppression filter	Brake chopper	DC choke				
A	kW	HP	A	kW	HP							
U_e 575 V AC, three-phase / U_2 575 V AC, three-phase, with BU, IP21												
Mains voltage (50/60Hz) U_{LN}: 380 (-15%) - 500 (+10%) V												
3.3	1.5	2	4.5	2.2	3	✓	✓	✓	FS1	IP21/NEMA1	**DG1-353D3FB-C21C** 9703-1002-00P	1 unit
4.5	2.2	3	7.5	4	5	✓	✓	✓			**DG1-354D5FB-C21C** 9703-1004-00P	
7.5	4	5	10	5.5	7.5	✓	✓	✓			**DG1-357D5FB-C21C** 9703-1006-00P	
10	5.5	7.5	13.5	7.5	10	✓	✓	✓	FS2		**DG1-35010FB-C21C** 9703-2002-00P	
13.5	7.5	10	18	11	15	✓	✓	✓			**DG1-35013FB-C21C** 9703-2004-00P	
18	11	15	22	15	20	✓	✓	✓			**DG1-35018FB-C21C** 9703-2006-00P	
22	15	20	27	18.5	25	✓	✓	✓	FS3		**DG1-35022FB-C21C** 9703-3002-00P	
27	18.5	25	34	22	30	✓	✓	✓			**DG1-35027FB-C21C** 9703-3004-00P	
34	22	30	41	30	40	✓	✓	✓			**DG1-35034FB-C21C** 9703-3006-00P	
41	30	40	52	37	50	✓	✓	✓	FS4		**DG1-35041FB-C21C** 9703-4002-00P	
52	37	50	62	45	60	✓	✓	✓			**DG1-35052FB-C21C** 9703-4006-00P	
62	45	60	80	55	75	✓	✓	✓			**DG1-35062FB-C21C** 9703-4010-00P	
80	55	75	100	75	100	✓	✓	✓	FS5		**DG1-35080FB-C21C** 9703-5002-00P	
100	75	100	125	90	125	✓	✓	✓			**DG1-35100FB-C21C** 9703-5006-00P	
125	90	125	144	110	150	✓	✓	✓			**DG1-35125FB-C21C** 9703-5010-00P	
144	110	150	208	160	200	✓	✓	✓	FS6		**DG1-35144FB-C21C** 9703-6002-00P	
208	160	200	250	200	250	✓	✓	✓			**DG1-35208FB-C21C** 9703-6005-00P	
U_e 575 V AC, three-phase / U_2 575 V AC, three-phase, without BU, IP21												
Mains voltage (50/60Hz) U_{LN}: 380 (-15%) - 500 (+10%) V												
41	30	40	52	37	50	✓	–	✓	FS4	IP21/NEMA1	**DG1-35041FN-C21C** 9703-4004-00P	1 unit
52	37	50	62	45	60	✓	–	✓			**DG1-35052FN-C21C** 9703-4008-00P	
62	45	60	80	55	75	✓	–	✓			**DG1-35062FN-C21C** 9703-4012-00P	
80	55	75	100	75	100	✓	–	✓	FS5		**DG1-35080FN-C21C** 9703-5004-00P	
100	75	100	125	90	125	✓	–	✓			**DG1-35100FN-C21C** 9703-5008-00P	
125	90	125	144	110	150	✓	–	✓			**DG1-35125FN-C21C** 9703-5012-00P	
144	110	150	208	160	200	✓	–	✓	FS6		**DG1-35144FN-C21C** 9703-6004-00P	
208	160	200	250	200	250	✓	–	✓			**DG1-35208FN-C21C** 9703-6006-00P	

Notes

[1)] Overload cycle for 60 s every 600 s, 150% at 50°C ambient temperature, 110% at 40°C ambient temperature

[2)] For normal internally and externally ventilated four-pole three-phase asynchronous motors with 1500 rpm at 50 Hz and 1800 rpm at 60 Hz

[3)] At 400 V, 50 Hz/at 480 V, 60 Hz

2.6 Variable frequency drive DG1 to 160 kW

DG1Pro for three-phase motors 400 V, three-phase

Rated operational current[1]	Assigned motor output [1) 2) 3)]		Rated operational current[1]	Assigned motor output [1) 2) 3)]		Configuration			Frame size	Protection type	**Catalog Number** Article no.	Std. pack
I_n = 150% I_e			I_n = 110% I_e			Radio interference suppression filter	Brake chopper	DC choke				
A	kW	HP	A	kW	HP							
U_e 575 V AC, three-phase / U_2 575 V AC, three-phase, with BU, IP54												
Mains voltage (50/60Hz) U_{LN}: 380 (-15%) - 500 (+10%) V												
3.3	1.5	2	4.5	2.2	3	✓	✓	✓	FS1	IP54/NEMA12	**DG1-353D3FB-C54C** 9703-1102-00P	1 unit
4.5	2.2	3	7.5	4	5	✓	✓	✓			**DG1-354D5FB-C54C** 9703-1104-00P	
7.5	4	5	10	5.5	7.5	✓	✓	✓			**DG1-357D5FB-C54C** 9703-1106-00P	
10	5.5	7.5	13.5	7.5	10	✓	✓	✓	FS2		**DG1-35010FB-C54C** 9703-2102-00P	
13.5	7.5	10	18	11	15	✓	✓	✓			**DG1-35013FB-C54C** 9703-2104-00P	
18	11	15	22	15	20	✓	✓	✓			**DG1-35018FB-C54C** 9703-2106-00P	
22	15	20	27	18.5	25	✓	✓	✓	FS3		**DG1-35022FB-C54C** 9703-3102-00P	
27	18.5	25	34	22	30	✓	✓	✓			**DG1-35027FB-C54C** 9703-3104-00P	
34	22	30	41	30	40	✓	✓	✓			**DG1-35034FB-C54C** 9703-3106-00P	
41	30	40	52	37	50	✓	✓	✓	FS4		**DG1-35041FB-C54C** 9703-4102-00P	
52	37	50	62	45	60	✓	✓	✓			**DG1-35052FB-C54C** 9703-4106-00P	
62	45	60	80	55	75	✓	✓	✓			**DG1-35062FB-C54C** 9703-4110-00P	
80	55	75	100	75	100	✓	✓	✓	FS5		**DG1-35080FB-C54C** 9703-5102-00P	
100	75	100	125	90	125	✓	✓	✓			**DG1-35100FB-C54C** 9703-5106-00P	
125	90	125	144	110	150	✓	✓	✓			**DG1-35125FB-C54C** 9703-5110-00P	
144	110	150	208	160	200	✓	✓	✓	FS6		**DG1-35144FB-C54C** 9703-6102-00P	
208	160	200	250	200	250	✓	✓	✓			**DG1-35208FB-C54C** 9703-6105-00P	
U_e 575 V AC, three-phase / U_2 575 V AC, three-phase, without BU, IP54												
Mains voltage (50/60Hz) U_{LN}: 380 (-15%) - 500 (+10%) V												
41	30	40	52	37	50	✓	–	✓	FS4	IP54/NEMA12	**DG1-35041FN-C54C** 9703-4104-00P	1 unit
52	37	50	62	45	60	✓	–	✓			**DG1-35052FN-C54C** 9703-4108-00P	
62	45	60	80	55	75	✓	–	✓			**DG1-35062FN-C54C** 9703-4112-00P	
80	55	75	100	75	100	✓	–	✓	FS5		**DG1-35080FN-C54C** 9703-5104-00P	
100	75	100	125	90	125	✓	–	✓			**DG1-35100FN-C54C** 9703-5108-00P	
125	90	125	144	110	150	✓	–	✓			**DG1-35125FN-C54C** 9703-5112-00P	
144	110	150	208	160	200	✓	–	✓	FS6		**DG1-35144FN-C54C** 9703-6104-00P	
208	160	200	250	200	250	✓	–	✓			**DG1-35208FN-C54C** 9703-6106-00P	

Notes

[1)] Overload cycle for 60 s every 600 s, 150% at 50°C ambient temperature, 110% at 40°C ambient temperature
[2)] For normal internally and externally ventilated four-pole three-phase asynchronous motors with 1500 rpm at 50 Hz and 1800 rpm at 60 Hz
[3)] At 400 V, 50 Hz/at 480 V, 60 Hz

Options

Description	Catalog Number Article no.	Std. pack
DG1 network interfaces		
DG1/DH1 networking: PROFINET	**DXG-NET-PROFINET** 400003	1 unit
DG1/DH1 networking: PROFIBUS	**DXG-NET-PROFIBUS** 744-A2617-00P	
DG1/DH1 networking: DEVICENET	**DXG-NET-DEVICENET** 744-F0117-00P	
DG1/DH1 networking: SWD-IP54	**DXG-NET-SWD-IP54** 744-F0191-00P	
DG1/DH1 networking: CANOPEN	**DXG-NET-CANOPEN** 744-F0116-00P	
DG1/DH1 networking: SWD-IP20	**DXG-NET-SWD-IP20** 744-F0190-00P	
DG1/DH1 D-sub adapter on terminals	**DXG-MNT-PROFIBUS** 744-A2618-00P	
I/O expansions DG1 & DH1		
DG1/DH1 IO expansion: THER1	**DXG-EXT-THER1** 744-A2615-00P	1 unit
DG1/DH1 IO expansion: 3RO	**DXG-EXT-3RO** 744-A2614-00P	
DG1/DH1 IO expansion: 3DI3DO1T	**DXG-EXT-3DI3DO1T** 744-A2612-00P	
DG1/DH1 IO expansion: 1AI2AO	**DXG-EXT-1AI2AO** 744-A2613-00P	
DG1/DH1 IO expansion: 6DI	**DXG-EXT-6DI** 744-A2616-00P	
Keypad options DG1, DH1 & DM1		
DG1 Remote Keypad mounting frame	**DXG-KEY-HOLDER** 730-32032-00P	1 unit
DG1 Remote Keypad Kit (3m cable)	**DXG-KEY-RMTKIT** 730-32033-00P	
DG1 Type12/IP54 Keypad stopper	**DXG-KEY-N12PLUG** 730-32038-00P	
DG1 Standard Keypad	**DXG-KEY-LCD** 730-32047-00P	
DG1 RJ-45 male-to-male Keypad connector	**DXG-SPR-KEYM2M** 744-S0000-00P	
IP54 Keypad Adapter		
DG1/DH1: IP54 keypad cable adapter	**DXG-KEY-N12CON** 199366	1 unit
Battery		
DG1/DH1 spare battery	**DXG-ACC-RTBATT** 730-32039-00P	1 unit
Cable		
DG1/DH1 RJ45 cable, 1m	**DXG-CBL-1M0** 730-32034-00P	1 unit
DG1/DH1 RJ45 cable, 3m	**DXG-CBL-3M0** 730-32035-00P	
DG1/DH1 USB to RJ45 cable, 1.5m	**DXG-CBL-PCCABLE** 730-32037-00P	
Unit-through mounting frames		
DG1/DH1 unit-through frame, frame size 1	**DXG-ACC-FR1N12FK** 730-32022-00P	1 unit
DG1/DH1 unit-through frame, frame size 2	**DXG-ACC-FR2N12FK** 730-32023-00P	
DG1/DH1 unit-through frame, frame size 3	**DXG-ACC-FR3N12FK** 730-32024-00P	
DG1/DH1 unit-through frame, frame size 4	**DXG-ACC-FR4N12FK** 730-32025-00P	
DG1/DH1 unit-through frame, frame size 5	**DXG-ACC-FR5N12FK** 730-32026-00P	
DG1/DH1 unit-through frame, frame size 6	**DXG-ACC-FR6N12FK** 744-A3845-00P	
IP21 to IP54 retrofit kit, frame size 1 and frame size 2		
DG1/DH1 retrofit kit for conversion to IP54/NEMA12, frame size 1, 400 V	**DXG-ACC-4FR1N12KIT** 730-32029-00P	1 unit
DG1/DH1 retrofit kit for conversion to IP54/NEMA12, frame size 1, 230 V	**DXG-ACC-2FR1N12KIT** 744-A2815-00P	
DG1/DH1 retrofit kit for conversion to IP54/NEMA12, frame size 2	**DXG-ACC-FR2N12KIT** 730-32030-00P	

Engineering

Catalog Number	I_e (150% overload)			I_e (110% overload)		
	Rated operational current	Type 1 coordination	Type 1 coordination	Rated operational current	Type 1 coordination	Type 1 coordination
	A			A		
230 V with EMC filter, with braking chopper, IP20						
DG1-323D7EB-C20C	3.7	PKZM0-4	C10G10	4.8	PKZM0-6.3	C10G10
DG1-324D8EB-C20C	4.8	PKZM0-6.3	C10G10	6.6	PKZM0-10	C10G10
DG1-326D6EB-C20C	6.6	PKZM0-10	C10G16	7.8	PKZM0-10	C10G16
230 V with EMC filter, with braking chopper, IP21/IP54						
DG1-323D7FB…	3.7	PKZM0-4	C10G10	4.8	PKZM0-6.3	C10G10
DG1-324D8FB…	4.8	PKZM0-6.3	C10G10	6.6	PKZM0-10	C10G10
DG1-326D6FB…	6.6	PKZM0-10	C10G10	7.8	PKZM0-10	C10G10
DG1-327D8FB…	7.8	PKZM0-10	C10G16	11	PKZM0-12	C10G16
DG1-32011FB…	11	PKZM0-12	C10G16	12.5	PKZM0-16	C10G16
DG1-32012FB…	12.5	PKZM0-16	C10G20	17.5	PKZM0-20	C10G20
DG1-32017FB…	17.5	PKZM0-20	C10G32	25	PKZM0-25	C10G32
DG1-32025FB…	25	PKZM0-25	C14G40	31	PKZM0-32	C14G40
DG1-32031FB…	31	PKZM0-32	C22G63	48	PKZM4-50	C22G63
DG1-32048FB…	48	PKZM4-50	C22G80	61	PKZM4-63	C22G80
DG1-32061FB…	61	PKZM4-63	C22G100	75	NZMC1-A80	C22G100
DG1-32075FB…	75	NZMC1-A80	125NHG00B	88	NZMC1-A100	125NHG00B
DG1-32088FB…	88	NZMC1-A100	125NHG00B	114	NZMC1-A125	125NHG00B
DG1-32114FB…	114	NZMC1-A125	200NHG1B	143	NZMC1-A160	200NHG1B
DG1-32143FB…	143	NZMC1-A160	200NHG1B	170	NZMC2-A200	200NHG1B
DG1-32170FB…	170	NZMC2-A200	250NHG1B	211	NZMC2-A250	250NHG1B
DG1-32211FB…	211	NZMC2-A250	400NHG03B	261	NZMC2-A300	400NHG03B
DG1-32248FB…	248	NZMC2-A250	400NHG03B	312	NZMC3-A320	400NHG03B
230 V with EMC filter, without braking chopper, IP21/IP54						
DG1-32061FN…	61	PKZM4-63	C22G100	75	NZMC1-A80	C22G100
DG1-32075FN…	75	NZMC1-A80	125NHG00B	88	NZMC1-A100	125NHG00B
DG1-32088FN…	88	NZMC1-A100	125NHG00B	114	NZMC1-A125	125NHG00B
DG1-32114FN…	114	NZMC1-A125	200NHG1B	143	NZMC1-A160	200NHG1B
DG1-32143FN…	143	NZMC1-A160	200NHG1B	170	NZMC2-A200	200NHG1B
DG1-32170FN…	170	NZMC2-A200	250NHG1B	211	NZMC2-A250	250NHG1B
DG1-32211FN…	211	NZMC2-A250	400NHG03B	261	NZMC2-A300	400NHG03B
DG1-32248FN…	248	NZMC2-A250	400NHG03B	312	NZMC3-A320	400NHG03B

			External brake resistors			
Minimum braking resistance	Switch-on voltage – brake chopper	Quantity – brake chopper	10.0% ED	20.0% ED	40.0% ED	RCD Type
Ω						
30	425	1	DX-BR035-1K1	DX-BR035-1K1	DX-BR035-1K1	FRCdM-25/4/003-G/Bfq
30	425	1	DX-BR035-1K1	DX-BR035-1K1	DX-BR040-3K1	FRCdM-25/4/003-G/Bfq
30	425	1	DX-BR035-1K1	DX-BR035-1K1	DX-BR040-3K1	FRCdM-25/4/003-G/Bfq
30	425	1	DX-BR035-1K1	DX-BR035-1K1	DX-BR035-1K1	FRCdM-25/4/003-G/Bfq
30	425	1	DX-BR035-1K1	DX-BR035-1K1	DX-BR040-3K1	FRCdM-25/4/003-G/Bfq
30	425	1	DX-BR035-1K1	DX-BR035-1K1	DX-BR040-3K1	FRCdM-25/4/003-G/Bfq
30	425	1	DX-BR035-1K1	DX-BR040-3K1	DX-BR040-3K1	FRCdM-25/4/003-G/Bfq
20	425	1	DX-BR022-1K4	DX-BR022-3K1	DX-BR022-5K1	FRCdM-25/4/003-G/Bfq
20	425	1	DX-BR022-1K4	DX-BR022-3K1	DX-BR022-5K1	FRCdM-40/4/003-G/Bfq
20	425	1	DX-BR022-1K4	DX-BR022-3K1	DX-BR022-5K1	FRCdM-40/4/003-G/Bfq
10	425	1	P:4 x DX-BR047-9K2	P:4 x DX-BR047-9K2	P:4 x DX-BR047-9K2	FRCdM-63/4/003-G/Bfq
10	425	1	P:4 x DX-BR047-9K2	P:4 x DX-BR047-9K2	P:4 x DX-BR047-9K2	
3.3	425	1	R:2 x DX-BR002-54K3	R:2 x DX-BR002-54K3	R:2 x DX-BR002-54K3	
3.3	425	1	R:2 x DX-BR002-54K3	R:2 x DX-BR002-54K3	R:2 x DX-BR002-54K3	
3.3	425	1	R:2 x DX-BR002-54K3	R:2 x DX-BR002-54K3	R:2 x DX-BR002-54K3	
1.4	425	1	P:4 x DX-BR006-5K1	P:4 x DX-BR006-5K1	DX-BR002-54K3	
1.4	425	1	P:4 x DX-BR006-5K1	P:4 x DX-BR006-5K1	DX-BR002-54K3	
1.4	425	1	P:4 x DX-BR006-5K1	DX-BR002-54K3	DX-BR002-54K3	
1.4	425	1	P:4 x DX-BR006-5K1	DX-BR002-54K3	DX-BR002-54K3	
1.4	425	1	P:4 x DX-BR006-5K1	DX-BR002-54K3	DX-BR002-54K3	

Catalog Number	I_e (150% overload)			I_e (110% overload)		
	Rated operational current	Type 1 coordination	Type 1 coordination	Rated operational current	Type 1 coordination	Type 1 coordination
	A			A		
400 V with EMC filter, with braking chopper, IP20						
DG1-342D2EB-C20C	2.2	PKZM0-2.5	C10G6	3.3	PKZM0-4	C10G6
DG1-343D3EB-C20C	3.3	PKZM0-4	C10G10	4.3	PKZM0-6.3	C10G10
DG1-344D3EB-C20C	4.3	PKZM0-6.3	C10G10	5.6	PKZM0-6.3	C10G10
DG1-345D6EB-C20C	5.6	PKZM0-6.3	C10G16	7.6	PKZM0-10	C10G16
400 V with EMC filter, with braking chopper, IP21/IP54						
DG1-342D2FB…	2.2	PKZM0-2.5	C10G10	3.3	PKZM0-4	C10G10
DG1-343D3FB…	3.3	PKZM0-4	C10G10	4.3	PKZM0-6.3	C10G10
DG1-344D3FB…	4.3	PKZM0-6.3	C10G10	5.6	PKZM0-6.3	C10G10
DG1-345D6FB…	5.6	PKZM0-6.3	C10G10	7.6	PKZM0-10	C10G10
DG1-347D6FB…	7.6	PKZM0-10	C10G16	9	PKZM0-10	C10G16
DG1-349D0FB…	9	PKZM0-10	C10G16	12	PKZM0-12	C10G16
DG1-34012FB…	12	PKZM0-12	C10G20	16	PKZM0-16	C10G20
DG1-34016FB…	16	PKZM0-16	C10G32	23	PKZM0-25	C10G32
DG1-34023FB…	23	PKZM0-25	C14G40	31	PKZM0-32	C14G40
DG1-34031FB…	31	PKZM0-32	C14G50	38	PKZM4-40	C14G50
DG1-34038FB…	38	PKZM4-40	C22G63	46	PKZM4-50	C22G63
DG1-34046FB…	46	PKZM4-50	C22G80	61	PKZM4-63	C22G80
DG1-34061FB…	61	PKZM4-63	C22G100	72	NZMC1-A80	C22G100
DG1-34072FB…	72	NZMC1-A80	125NHG00B	87	NZMC1-A100	125NHG00B
DG1-34087FB…	87	NZMC1-A100	125NHG00B	105	NZMC1-A125	125NHG00B
DG1-34105FB…	105	NZMC1-A125	200NHG1B	140	NZMC1-A160	200NHG1B
DG1-34140FB…	140	NZMC1-A160	200NHG1B	170	NZMC2-A200	200NHG1B
DG1-34170FB…	170	NZMC2-A200	250NHG1B	205	NZMC2-A250	250NHG1B
DG1-34205FB…	205	NZMC2-A250	400NHG03B	261	NZMC2-A300	400NHG03B
DG1-34245FB…	245	NZMC2-A250	400NHG03B	310	NZMC3-A320	400NHG03B
400 V with EMC filter, without braking chopper, IP21/IP54						
DG1-34061FN…	61	PKZM4-63	C22G100	72	NZMC1-A80	C22G100
DG1-34072FN…	72	NZMC1-A80	125NHG00B	87	NZMC1-A100	125NHG00B
DG1-34087FN…	87	NZMC1-A100	125NHG00B	105	NZMC1-A125	125NHG00B
DG1-34105FN…	105	NZMC1-A125	200NHG1B	140	NZMC1-A160	200NHG1B
DG1-34140FN…	140	NZMC1-A160	200NHG1B	170	NZMC2-A200	200NHG1B
DG1-34170FN…	170	NZMC2-A200	250NHG1B	205	NZMC2-A250	250NHG1B
DG1-34205FN…	205	NZMC2-A250	400NHG03B	261	NZMC2-A300	400NHG03B
DG1-34245FN…	245	NZMC2-A250	400NHG03B	310	NZMC3-A320	400NHG03B

			External brake resistors			
Minimum braking resistance	Switch-on voltage – brake chopper	Quantity – brake chopper	10.0% ED	20.0% ED	40.0% ED	RCD Type
Ω						
63	850	1	DX-BR075-1K4	DX-BR075-1K4	DX-BR075-1K4	FRCdM-25/4/003-G/Bfq
63	850	1	DX-BR075-1K4	DX-BR075-1K4	DX-BR075-5K1	FRCdM-25/4/003-G/Bfq
63	850	1	DX-BR075-1K4	DX-BR075-1K4	DX-BR075-5K1	FRCdM-25/4/003-G/Bfq
63	850	1	DX-BR075-1K4	DX-BR075-5K1	DX-BR075-5K1	FRCdM-25/4/003-G/Bfq
63	850	1	DX-BR075-1K4	DX-BR075-1K4	DX-BR075-1K4	FRCdM-25/4/003-G/Bfq
63	850	1	DX-BR075-1K4	DX-BR075-1K4	DX-BR075-5K1	FRCdM-25/4/003-G/Bfq
63	850	1	DX-BR075-1K4	DX-BR075-1K4	DX-BR075-5K1	FRCdM-25/4/003-G/Bfq
63	850	1	DX-BR075-1K4	DX-BR075-5K1	DX-BR075-5K1	FRCdM-25/4/003-G/Bfq
63	850	1	DX-BR075-1K4	DX-BR075-5K1	DX-BR075-5K1	FRCdM-25/4/003-G/Bfq
63	850	1	DX-BR075-1K4	DX-BR075-5K1	DX-BR075-5K1	FRCdM-25/4/003-G/Bfq
42	850	1	DX-BR047-3K1	DX-BR047-3K1	DX-BR047-9K2	FRCdM-25/4/003-G/Bfq
42	850	1	DX-BR047-3K1	DX-BR047-5K1	DX-BR047-9K2	FRCdM-40/4/003-G/Bfq
42	850	1	DX-BR047-3K1	DX-BR047-5K1	DX-BR047-9K2	FRCdM-40/4/003-G/Bfq
14	850	1	P:3 x DX-BR047-3K1	P:3 x DX-BR047-3K1	P:3 x DX-BR047-9K2	FRCdM-63/4/003-G/Bfq
14	850	1	P:3 x DX-BR047-3K1	P:3 x DX-BR047-5K1	P:3 x DX-BR047-9K2	FRCdM-63/4/003-G/Bfq
14	850	1	P:3 x DX-BR047-3K1	P:3 x DX-BR047-5K1	P:3 x DX-BR047-9K2	
6.5	850	1	P:3 x DX-BR022-3K1	P:3 x DX-BR022-9K2	R:4 x DX-BR002-54K3	
6.5	850	1	P:3 x DX-BR022-3K1	P:3 x DX-BR022-9K2	R:4 x DX-BR002-54K3	
6.5	850	1	P:3 x DX-BR022-5K1	P:3 x DX-BR022-9K2	R:4 x DX-BR002-54K3	
3.3	850	1	R:2 x DX-BR002-54K3	R:2 x DX-BR002-54K3	R:2 x DX-BR002-54K3	
3.3	850	1	R:2 x DX-BR002-54K3	R:2 x DX-BR002-54K3	R:2 x DX-BR002-102K4	
3.3	850	1	R:2 x DX-BR002-54K3	R:2 x DX-BR002-54K3	R:2 x DX-BR002-102K4	
3.3	850	1	R:2 x DX-BR002-54K3	R:2 x DX-BR002-54K3	R:2 x DX-BR002-102K4	
3.3	850	1	R:2 x DX-BR002-54K3	R:2 x DX-BR002-54K3	R:2 x DX-BR002-102K4	

Catalog Number	I_e (150% overload)			I_e (110% overload)		
	Rated operational current	Type 1 coordination	Type 1 coordination	Rated operational current	Type 1 coordination	Type 1 coordination
	A			A		
575 V with EMC filter, with braking chopper, IP21/IP54						
DG1-353D3FB…	3.3	PKZM0-4	C10G10	4.5	PKZM0-6.3	C10G10
DG1-354D5FB…	4.5	PKZM0-6.3	C10G10	7.5	PKZM0-10	C10G10
DG1-357D5FB…	7.5	PKZM0-10	C10G16	10	PKZM0-10	C10G16
DG1-35010FB…	10	PKZM0-10	C10G20	13.5	PKZM0-16	C10G20
DG1-35013FB…	13.5	PKZM0-16	C10G32	18	PKZM0-20	C10G32
DG1-35018FB…	18	PKZM0-20	C14G40	22	PKZM0-25	C14G40
DG1-35022FB…	22	PKZM0-25	C14G40	27	PKZM0-32	C14G40
DG1-35027FB…	27	PKZM0-32	C14G50	34	PKZM4-40	C14G50
DG1-35034FB…	34	PKZM4-40	C14G50	41	PKZM4-50	C14G50
DG1-35041FB…	41	PKZM4-50	C22G80	52	PKZM4-58	C22G80
DG1-35052FB…	52	PKZM4-58	C22G80	62	PKZM4-63	C22G80
DG1-35062FB…	62	PKZM4-63	125NHG00B	80	NZMC1-A80	125NHG00B
DG1-35080FB…	80	NZMC1-A80	160NHG00B	100	NZMC1-A100	160NHG00B
DG1-35100FB…	100	NZMC1-A100	200NHG1B	125	NZMC1-A125	200NHG1B
DG1-35125FB…	125	NZMC1-A125	200NHG1B	144	NZMC1-A160	200NHG1B
DG1-35144FB…	144	NZMC1-A160	400NHG03B	208	NZMC2-A250	400NHG03B
DG1-35208FB…	208	NZMC2-A250	400NHG03B	250	NZMC2-A250	400NHG03B
575 V with EMC filter, without braking chopper, IP21/IP54						
DG1-35041FN…	41	PKZM4-50	C22G80	52	PKZM4-58	C22G80
DG1-35052FN…	52	PKZM4-58	C22G80	62	PKZM4-63	C22G80
DG1-35062FN…	62	PKZM4-63	125NHG00B	80	NZMC1-A80	125NHG00B
DG1-35080FN…	80	NZMC1-A80	160NHG00B	100	NZMC1-A100	160NHG00B
DG1-35100FN…	100	NZMC1-A100	200NHG1B	125	NZMC1-A125	200NHG1B
DG1-35125FN…	125	NZMC1-A125	200NHG1B	144	NZMC1-A160	200NHG1B
DG1-35144FN…	144	NZMC1-A160	400NHG03B	208	NZMC2-A250	400NHG03B
DG1-35208FN…	208	NZMC2-A250	400NHG03B	250	NZMC2-A250	400NHG03B

			External brake resistors			
Minimum braking resistance Ω	Switch-on voltage – brake chopper	Quantity – brake chopper	10.0% ED	20.0% ED	40.0% ED	RCD Type
100	1050	1	DX-BR100-0K8	DX-BR100-1K4	DX-BR100-6K2	FRCdM-25/4/003-G/Bfq
100	1050	1	DX-BR100-1K4	DX-BR100-6K2	DX-BR100-6K2	FRCdM-25/4/003-G/Bfq
100	1050	1	DX-BR100-1K4	DX-BR100-6K2	DX-BR100-6K2	FRCdM-25/4/003-G/Bfq
30	1050	1	DX-BR040-3K1	DX-BR040-5K1	DX-BR047-9K2	FRCdM-25/4/003-G/Bfq
30	1050	1	DX-BR040-3K1	DX-BR040-5K1	DX-BR047-9K2	FRCdM-40/4/003-G/Bfq
30	1050	1	DX-BR040-3K1	DX-BR047-9K2	P2R2: DX-BR047-9K2	FRCdM-40/4/003-G/Bfq
18	1050	1	DX-BR022-5K1	DX-BR022-9K2	P:2 x DX-BR047-9K2	FRCdM-40/4/003-G/Bfq
18	1050	1	DX-BR022-5K1	DX-BR022-9K2	P:2 x DX-BR047-9K2	FRCdM-63/4/003-G/Bfq
18	1050	1	DX-BR022-9K2	P:2 x DX-BR047-9K2	P:4 x DX-BR100-6K2	FRCdM-63/4/003-G/Bfq
9	1050	1	P:4 x DX-BR047-9K2	P:4 x DX-BR047-9K2	P:4 x DX-BR047-9K2	
9	1050	1	P:4 x DX-BR047-9K2	P:4 x DX-BR047-9K2	P:4 x DX-BR047-9K2	
9	1050	1	P:4 x DX-BR047-9K2	P:4 x DX-BR047-9K2	R:5 x DX-BR002-54K3	
7	1050	1	P:3 x DX-BR022-5K1	P:3 x DX-BR022-9K2	R:4 x DX-BR002-54K3	
7	1050	1	P:3 x DX-BR022-9K2	R:4 x DX-BR002-54K3	R:4 x DX-BR002-102K4	
7	1050	1	P:3 x DX-BR022-9K2	R:4 x DX-BR002-54K3	R:4 x DX-BR002-102K4	
2.5	1050	1	P:2 x DX-BR006-18K1	P:2 x DX-BR006-33K3	R:2 x DX-BR002-102K4	
2.5	1050	1	P:2 x DX-BR006-18K1	P:2 x DX-BR006-33K3	R:2 x DX-BR002-102K4	

DG1 External components

Catalog Number	High Overload (150%)								
	Rated operational current	Optional mains contactor	Internal EMC Filter			External EMC filter			
	I_e		Permissible cable length for C1	Permissible cable length for C2	Permissible cable length for C3		Permissible cable length for C1	Permissible cable length for C2	Permissible cable length for C3
	A		m	m	m		m	m	m
230 V with EMC filter, with braking chopper, IP20									
DG1-323D7EB-C20C	3.7	DILM7-10 (230V50HZ,240V60HZ)	0	0	0	DX-EMC34-008	25	50	75
DG1-324D8EB-C20C	4.8	DILM7-10 (230V50HZ,240V60HZ)	0	0	0	DX-EMC34-008	25	50	75
DG1-326D6EB-C20C	6.6	DILM7-10 (230V50HZ,240V60HZ)	0	0	0	DX-EMC34-008	25	50	75
230 V with EMC filter, with braking chopper, IP21/IP54									
DG1-323D7FB…	3.7	DILM7-10 (230V50HZ,240V60HZ)	0	10	50	DX-EMC34-008	25	50	75
DG1-324D8FB…	4.8	DILM7-10 (230V50HZ,240V60HZ)	0	10	50	DX-EMC34-008	25	50	75
DG1-326D6FB…	6.6	DILM7-10 (230V50HZ,240V60HZ)	0	10	50	DX-EMC34-008	25	50	75
DG1-327D8FB…	7.8	DILM7-10 (230V50HZ,240V60HZ)	0	10	50	DX-EMC34-008	25	50	75
DG1-32011FB…	11	DILM7-10 (230V50HZ,240V60HZ)	0	10	50	DX-EMC34-016	25	50	75
DG1-32012FB…	12.5	DILM7-10 (230V50HZ,240V60HZ)	0	10	50	DX-EMC34-016	25	50	75
DG1-32017FB…	17.5	DILM7-10 (230V50HZ,240V60HZ)	0	10	50	DX-EMC34-030	25	50	75
DG1-32025FB…	25	DILM17-10 (230V50HZ,240V60HZ)	0	10	50	DX-EMC34-030	25	50	75
DG1-32031FB…	31	DILM17-10 (230V50HZ,240V60HZ)	0	10	50	DX-EMC34-042	25	50	75
DG1-32048FB…	48	DILM40 (230V50HZ,240V60HZ)	0	10	50	DX-EMC34-055	25	50	75
DG1-32061FB…	61	DILM50 (230V50HZ,240V60HZ)	0	10	50	DX-EMC34-075	25	50	75
DG1-32075FB…	75	DILM65 (230V50HZ,240V60HZ)	0	10	50	DX-EMC34-075	25	50	75
DG1-32088FB…	88	DILM80 (230V50HZ,240V60HZ)	0	10	50	DX-EMC34-100	25	50	75
DG1-32114FB…	114	DILM115 (RAC240)	0	10	50	DX-EMC34-130	25	50	75
DG1-32143FB…	143	DILM150 (RAC240)	0	10	50	DX-EMC34-180	25	50	75
DG1-32170FB…	170	DILM170 (RAC240)	0	10	50	DX-EMC34-180	25	50	75
DG1-32211FB…	211	DILM185A/22 (RAC240)	0	10	50	DX-EMC34-250	25	50	75
DG1-32248FB…	248	DILM185A/22 (RAC240)	0	10	50	DX-EMC34-250	25	50	75
230 V with EMC filter, without braking chopper, IP21/IP54									
DG1-32061FN…	61	DILM50 (230V50HZ,240V60HZ)	0	10	50	DX-EMC34-075	25	50	75
DG1-32075FN…	75	DILM65 (230V50HZ,240V60HZ)	0	10	50	DX-EMC34-075	25	50	75
DG1-32088FN…	88	DILM80 (230V50HZ,240V60HZ)	0	10	50	DX-EMC34-100	25	50	75
DG1-32114FN…	114	DILM115 (RAC240)	0	10	50	DX-EMC34-130	25	50	75
DG1-32143FN…	143	DILM150 (RAC240)	0	10	50	DX-EMC34-180	25	50	75
DG1-32170FN…	170	DILM170 (RAC240)	0	10	50	DX-EMC34-180	25	50	75
DG1-32211FN…	211	DILM185A/22 (RAC240)	0	10	50	DX-EMC34-250	25	50	75
DG1-32248FN…	248	DILM185A/22 (RAC240)	0	10	50	DX-EMC34-250	25	50	75

External EMC filter (low leakage current)				Mains choke		Motor choke	Sine filter	All-pole sine filter
	Permissible cable length for C1	Permissible cable length for C2	Permissible cable length for C3		u_k			
	m	m	m					
DX-EMC34-008-L	5	25	50	DX-LN3-004	7.5%	DX-LM3-008	DX-SIN3-004	DX-SIN3-006-A
DX-EMC34-008-L	5	25	50	DX-LN3-006	4.9%	DX-LM3-008	DX-SIN3-010	DX-SIN3-006-A
DX-EMC34-008-L	5	25	50	DX-LN3-010	2.9%	DX-LM3-008	DX-SIN3-010	DX-SIN3-013-A
DX-EMC34-008-L	5	25	50	Internal DC link choke	5%	DX-LM3-008	DX-SIN3-004	DX-SIN3-006-A
DX-EMC34-008-L	5	25	50	Internal DC link choke	5%	DX-LM3-008	DX-SIN3-010	DX-SIN3-006-A
DX-EMC34-008-L	5	25	50	Internal DC link choke	5%	DX-LM3-008	DX-SIN3-010	DX-SIN3-013-A
DX-EMC34-008-L	5	25	50	Internal DC link choke	5%	DX-LM3-008	DX-SIN3-010	DX-SIN3-013-A
DX-EMC34-016-L	5	25	50	Internal DC link choke	5%	DX-LM3-011	DX-SIN3-016	DX-SIN3-013-A
DX-EMC34-016-L	5	25	50	Internal DC link choke	5%	DX-LM3-016	DX-SIN3-016	DX-SIN3-013-A
DX-EMC34-030-L	5	25	50	Internal DC link choke	5%	DX-LM3-035	DX-SIN3-023	DX-SIN3-024-A
DX-EMC34-030-L	5	25	50	Internal DC link choke	5%	DX-LM3-035	DX-SIN3-032	DX-SIN3-046-A
DX-EMC34-042-L	5	25	50	Internal DC link choke	5%	DX-LM3-035	DX-SIN3-032	DX-SIN3-046-A
DX-EMC34-055-L	5	25	50	Internal DC link choke	5%	DX-LM3-050	DX-SIN3-048	
DX-EMC34-075-L	5	25	50	Internal DC link choke	5%	DX-LM3-063	DX-SIN3-061	
DX-EMC34-075-L	5	25	50	Internal DC link choke	5%	DX-LM3-080	DX-SIN3-090	
DX-EMC34-100-L	5	25	50	Internal DC link choke	5%	DX-LM3-100	DX-SIN3-090	
DX-EMC34-130-L	5	25	50	Internal DC link choke	5%	DX-LM3-150	DX-SIN3-115	
DX-EMC34-180-L	5	25	50	Internal DC link choke	5%	DX-LM3-150	DX-SIN3-150	
DX-EMC34-180-L	5	25	50	Internal DC link choke	5%	DX-LM3-180	DX-SIN3-180	
DX-EMC34-250-L	5	25	50	Internal DC link choke	5%	DX-LM3-220	DX-SIN3-250	
DX-EMC34-250-L	5	25	50	Internal DC link choke	5%	DX-LM3-260	DX-SIN3-250	
DX-EMC34-075-L	5	25	50	Internal DC link choke	5%	DX-LM3-063	DX-SIN3-061	
DX-EMC34-075-L	5	25	50	Internal DC link choke	5%	DX-LM3-080	DX-SIN3-090	
DX-EMC34-100-L	5	25	50	Internal DC link choke	5%	DX-LM3-100	DX-SIN3-090	
DX-EMC34-130-L	5	25	50	Internal DC link choke	5%	DX-LM3-150	DX-SIN3-115	
DX-EMC34-180-L	5	25	50	Internal DC link choke	5%	DX-LM3-150	DX-SIN3-150	
DX-EMC34-180-L	5	25	50	Internal DC link choke	5%	DX-LM3-180	DX-SIN3-180	
DX-EMC34-250-L	5	25	50	Internal DC link choke	5%	DX-LM3-220	DX-SIN3-250	
DX-EMC34-250-L	5	25	50	Internal DC link choke	5%	DX-LM3-260	DX-SIN3-250	

DG1 External components

Catalog Number	High Overload (150%)								
	Rated operational current	Optional mains contactor	Internal EMC Filter			External EMC filter			
	I_e		Permissible cable length for C1	Permissible cable length for C2	Permissible cable length for C3		Permissible cable length for C1	Permissible cable length for C2	Permissible cable length for C3
	A		m	m	m		m	m	m
400 V with EMC filter, with braking chopper, IP20									
DG1-342D2EB-C20C	2.2	DILM7-10 (230V50HZ,240V60HZ)	0	0	0	DX-EMC34-008	25	50	75
DG1-343D3EB-C20C	3.3	DILM7-10 (230V50HZ,240V60HZ)	0	0	0	DX-EMC34-008	25	50	75
DG1-344D3EB-C20C	4.3	DILM7-10 (230V50HZ,240V60HZ)	0	0	0	DX-EMC34-008	25	50	75
DG1-345D6EB-C20C	5.6	DILM7-10 (230V50HZ,240V60HZ)	0	0	0	DX-EMC34-008	25	50	75
400 V with EMC filter, with braking chopper, IP21/IP54									
DG1-342D2FB…	2.2	DILM7-10 (230V50HZ,240V60HZ)	0	10	50	DX-EMC34-008	25	50	75
DG1-343D3FB…	3.3	DILM7-10 (230V50HZ,240V60HZ)	0	10	50	DX-EMC34-008	25	50	75
DG1-344D3FB…	4.3	DILM7-10 (230V50HZ,240V60HZ)	0	10	50	DX-EMC34-008	25	50	75
DG1-345D6FB…	5.6	DILM7-10 (230V50HZ,240V60HZ)	0	10	50	DX-EMC34-008	25	50	75
DG1-347D6FB…	7.6	DILM7-10 (230V50HZ,240V60HZ)	0	10	50	DX-EMC34-008	25	50	75
DG1-349D0FB…	9	DILM7-10 (230V50HZ,240V60HZ)	0	10	50	DX-EMC34-016	25	50	75
DG1-34012FB…	12	DILM7-10 (230V50HZ,240V60HZ)	0	10	50	DX-EMC34-016	25	50	75
DG1-34016FB…	16	DILM7-10 (230V50HZ,240V60HZ)	0	10	50	DX-EMC34-016	25	50	75
DG1-34023FB…	23	DILM17-10 (230V50HZ,240V60HZ)	0	10	50	DX-EMC34-030	25	50	75
DG1-34031FB…	31	DILM17-10 (230V50HZ,240V60HZ)	0	10	50	DX-EMC34-042	25	50	75
DG1-34038FB…	38	DILM17-10 (230V50HZ,240V60HZ)	0	10	50	DX-EMC34-042	25	50	75
DG1-34046FB…	46	DILM40 (230V50HZ,240V60HZ)	0	10	50	DX-EMC34-055	25	50	75
DG1-34061FB…	61	DILM50 (230V50HZ,240V60HZ)	0	10	50	DX-EMC34-075	25	50	75
DG1-34072FB…	72	DILM65 (230V50HZ,240V60HZ)	0	10	50	DX-EMC34-075	25	50	75
DG1-34087FB…	87	DILM80 (230V50HZ,240V60HZ)	0	10	50	DX-EMC34-100	25	50	75
DG1-34105FB…	105	DILM95 (230V50HZ,240V60HZ)	0	10	50	DX-EMC34-130	25	50	75
DG1-34140FB…	140	DILM150 (RAC240)	0	10	50	DX-EMC34-180	25	50	75
DG1-34170FB…	170	DILM170 (RAC240)	0	10	50	DX-EMC34-180	25	50	75
DG1-34205FB…	205	DILM185A/22 (RAC240)	0	10	50	DX-EMC34-250	25	50	75
DG1-34245FB…	245	DILM185A/22 (RAC240)	0	10	50	DX-EMC34-250	25	50	75
400 V with EMC filter, without braking chopper, IP21/IP54									
DG1-34061FN…	61	DILM50 (230V50HZ,240V60HZ)	0	10	50	DX-EMC34-075	25	50	75
DG1-34072FN…	72	DILM65 (230V50HZ,240V60HZ)	0	10	50	DX-EMC34-075	25	50	75
DG1-34087FN…	87	DILM80 (230V50HZ,240V60HZ)	0	10	50	DX-EMC34-100	25	50	75
DG1-34105FN…	105	DILM95 (230V50HZ,240V60HZ)	0	10	50	DX-EMC34-130	25	50	75
DG1-34140FN…	140	DILM150 (RAC240)	0	10	50	DX-EMC34-180	25	50	75
DG1-34170FN…	170	DILM170 (RAC240)	0	10	50	DX-EMC34-180	25	50	75
DG1-34205FN…	205	DILM185A/22 (RAC240)	0	10	50	DX-EMC34-250	25	50	75
DG1-34245FN…	245	DILM185A/22 (RAC240)	0	10	50	DX-EMC34-250	25	50	75

External EMC filter (low leakage current)				Mains choke		Motor choke	Sine filter	All-pole sine filter
	Permissible cable length for C1	Permissible cable length for C2	Permissible cable length for C3		u_k			
	m	m	m					
DX-EMC34-008-L	5	25	50	DX-LN3-004	7.5%	DX-LM3-008	DX-SIN3-004	DX-SIN3-006-A
DX-EMC34-008-L	5	25	50	DX-LN3-004	7.5%	DX-LM3-008	DX-SIN3-004	DX-SIN3-006-A
DX-EMC34-008-L	5	25	50	DX-LN3-006	4.9%	DX-LM3-008	DX-SIN3-010	DX-SIN3-006-A
DX-EMC34-008-L	5	25	50	DX-LN3-006	4.9%	DX-LM3-008	DX-SIN3-010	DX-SIN3-006-A
DX-EMC34-008-L	5	25	50	DC choke internal	5%	DX-LM3-008	DX-SIN3-004	DX-SIN3-006-A
DX-EMC34-008-L	5	25	50	DC choke internal	5%	DX-LM3-008	DX-SIN3-004	DX-SIN3-006-A
DX-EMC34-008-L	5	25	50	DC choke internal	5%	DX-LM3-008	DX-SIN3-010	DX-SIN3-006-A
DX-EMC34-008-L	5	25	50	DC choke internal	5%	DX-LM3-008	DX-SIN3-010	DX-SIN3-006-A
DX-EMC34-008-L	5	25	50	DC choke internal	5%	DX-LM3-008	DX-SIN3-010	DX-SIN3-013-A
DX-EMC34-016-L	5	25	50	DC choke internal	5%	DX-LM3-011	DX-SIN3-010	DX-SIN3-013-A
DX-EMC34-016-L	5	25	50	DC choke internal	5%	DX-LM3-016	DX-SIN3-016	DX-SIN3-013-A
DX-EMC34-016-L	5	25	50	DC choke internal	5%	DX-LM3-016	DX-SIN3-016	DX-SIN3-024-A
DX-EMC34-030-L	5	25	50	DC choke internal	5%	DX-LM3-035	DX-SIN3-023	DX-SIN3-024-A
DX-EMC34-042-L	5	25	50	DC choke internal	5%	DX-LM3-035	DX-SIN3-032	DX-SIN3-046-A
DX-EMC34-042-L	5	25	50	DC choke internal	5%	DX-LM3-050	DX-SIN3-048	DX-SIN3-046-A
DX-EMC34-055-L	5	25	50	DC choke internal	5%	DX-LM3-050	DX-SIN3-048	DX-SIN3-046-A
DX-EMC34-075-L	5	25	50	DC choke internal	5%	DX-LM3-063	DX-SIN3-061	
DX-EMC34-075-L	5	25	50	DC choke internal	5%	DX-LM3-080	DX-SIN3-072	
DX-EMC34-100-L	5	25	50	DC choke internal	5%	DX-LM3-100	DX-SIN3-090	
DX-EMC34-130-L	5	25	50	DC choke internal	5%	DX-LM3-150	DX-SIN3-115	
DX-EMC34-180-L	5	25	50	DC choke internal	5%	DX-LM3-150	DX-SIN3-150	
DX-EMC34-180-L	5	25	50	DC choke internal	5%	DX-LM3-180	DX-SIN3-180	
DX-EMC34-250-L	5	25	50	DC choke internal	5%	DX-LM3-220	DX-SIN3-250	
DX-EMC34-250-L	5	25	50	DC choke internal	5%	DX-LM3-260	DX-SIN3-250	
DX-EMC34-075-L	5	25	50	DC choke internal	5%	DX-LM3-063	DX-SIN3-061	
DX-EMC34-075-L	5	25	50	DC choke internal	5%	DX-LM3-080	DX-SIN3-072	
DX-EMC34-100-L	5	25	50	DC choke internal	5%	DX-LM3-100	DX-SIN3-090	
DX-EMC34-130-L	5	25	50	DC choke internal	5%	DX-LM3-150	DX-SIN3-115	
DX-EMC34-180-L	5	25	50	DC choke internal	5%	DX-LM3-150	DX-SIN3-150	
DX-EMC34-180-L	5	25	50	DC choke internal	5%	DX-LM3-180	DX-SIN3-180	
DX-EMC34-250-L	5	25	50	DC choke internal	5%	DX-LM3-220	DX-SIN3-250	
DX-EMC34-250-L	5	25	50	DC choke internal	5%	DX-LM3-260	DX-SIN3-250	

Catalog Number	High Overload (150%)						
	Rated operational current	Optional mains contactor	Internal EMC Filter			Mains choke	
	I_e		Permissible cable length for C1	Permissible cable length for C2	Permissible cable length for C3		u_k
	A		m	m	m		
575 V with EMC filter, with braking chopper, IP21/IP54							
DG1-353D3FB…	3.3	DILM7-10 (230V50HZ,240V60HZ)	0	0	10	DC choke internal	5%
DG1-354D5FB…	4.5	DILM7-10 (230V50HZ,240V60HZ)	0	0	10	DC choke internal	5%
DG1-357D5FB…	7.5	DILM7-10 (230V50HZ,240V60HZ)	0	0	10	DC choke internal	5%
DG1-35010FB…	10	DILM7-10 (230V50HZ,240V60HZ)	0	0	10	DC choke internal	5%
DG1-35013FB…	13.5	DILM7-10 (230V50HZ,240V60HZ)	0	0	10	DC choke internal	5%
DG1-35018FB…	18	DILM7-10 (230V50HZ,240V60HZ)	0	0	10	DC choke internal	5%
DG1-35022FB…	22	DILM7-10 (230V50HZ,240V60HZ)	0	0	10	DC choke internal	5%
DG1-35027FB…	27	DILM17-10 (230V50HZ,240V60HZ)	0	0	10	DC choke internal	5%
DG1-35034FB…	34	DILM17-10 (230V50HZ,240V60HZ)	0	0	10	DC choke internal	5%
DG1-35041FB…	41	DILM25-10 (230V50HZ,240V60HZ)	0	0	10	DC choke internal	5%
DG1-35052FB…	52	DILM50 (230V50HZ,240V60HZ)	0	0	10	DC choke internal	5%
DG1-35062FB…	62	DILM50 (230V50HZ,240V60HZ)	0	0	10	DC choke internal	5%
DG1-35080FB…	80	DILM65 (230V50HZ,240V60HZ)	0	0	10	DC choke internal	5%
DG1-35100FB…	100	DILM95 (230V50HZ,240V60HZ)	0	0	10	DC choke internal	5%
DG1-35125FB…	125	DILM115 (RAC240)	0	0	10	DC choke internal	5%
DG1-35144FB…	144	DILM150 (RAC240)	0	0	10	DC choke internal	5%
DG1-35208FB…	208	DILM185A/22 (RAC240)	0	0	10	DC choke internal	5%
575 V with EMC filter, without braking chopper, IP21/IP54							
DG1-35041FN…	41	DILM25-10 (230V50HZ,240V60HZ)	0	0	10	DC choke internal	5%
DG1-35052FN…	52	DILM50 (230V50HZ,240V60HZ)	0	0	10	DC choke internal	5%
DG1-35062FN…	62	DILM50 (230V50HZ,240V60HZ)	0	0	10	DC choke internal	5%
DG1-35080FN…	80	DILM65 (230V50HZ,240V60HZ)	0	0	10	DC choke internal	5%
DG1-35100FN…	100	DILM95 (230V50HZ,240V60HZ)	0	0	10	DC choke internal	5%
DG1-35125FN…	125	DILM115 (RAC240)	0	0	10	DC choke internal	5%
DG1-35144FN…	144	DILM150 (RAC240)	0	0	10	DC choke internal	5%
DG1-35208FN…	208	DILM185A/22 (RAC240)	0	0	10	DC choke internal	5%

Motor choke	Sine filter	All-pole sine filter
DX-LM3-008	DX-SIN3-004	DX-SIN3-006-A
DX-LM3-008	DX-SIN3-010	DX-SIN3-006-A
DX-LM3-008	DX-SIN3-010	DX-SIN3-013-A
DX-LM3-011	DX-SIN3-010	DX-SIN3-013-A
DX-LM3-016	DX-SIN3-016	DX-SIN3-024-A
DX-LM3-035	DX-SIN3-023	DX-SIN3-024-A
DX-LM3-035	DX-SIN3-023	DX-SIN3-024-A
DX-LM3-035	DX-SIN3-032	DX-SIN3-046-A
DX-LM3-035	DX-SIN3-037	DX-SIN3-046-A
DX-LM3-050	DX-SIN3-048	DX-SIN3-046-A
DX-LM3-063	DX-SIN3-061	
DX-LM3-063	DX-SIN3-072	
DX-LM3-080	DX-SIN3-090	
DX-LM3-100	DX-SIN3-115	
DX-LM3-150	DX-SIN3-150	
DX-LM3-150	DX-SIN3-150	
DX-LM3-220	DX-SIN3-250	

DX-LM3-050	DX-SIN3-048	DX-SIN3-046-A
DX-LM3-063	DX-SIN3-061	
DX-LM3-063	DX-SIN3-072	
DX-LM3-080	DX-SIN3-090	
DX-LM3-100	DX-SIN3-115	
DX-LM3-150	DX-SIN3-150	
DX-LM3-150	DX-SIN3-150	
DX-LM3-220	DX-SIN3-250	

Technical specifications

	Unit	Value
General		
Product standard		IEC/EN 61800-2
Production standard		RoHS, ISO 9001
Security		IEC/EN 61800-5, IEC/EN 60950-1: SELF
Radio interference level		IEC/EN 61800-3
Integrated radio interference suppression filter		Yes, C2
Radio interference class (EMC)		C1 (with external filter, for conducted emissions only), C2, C3, depending on the motor cable length, the connected load, and ambient conditions. External radio interference suppression filters (optional) may be necessary.
Radio interference class (EMC), external filters		Optional external radio interference suppression filter for longer motor cable lengths and for use in different EMC environments
Environment (EMC)		1st and 2nd environments as per EN 61800-3
first environment		Yes
second environment		Yes
longest permissible length of motor cable with internal filter		C2 ≤ 10 m | C3 ≤ 50 m | DG1-35..: C3 ≤ 10 m
Interference immunity		EN 61800-3:2004+A1-2012, first and second environment
Emissions		EN 61800-3:2004+A1-2012, Category C2
Electrostatic discharge (ESD)		IEC 61000-4-2, 4 kV contact, 8 kV air, Second environment, Criterion B
Fast transients (burst)		IEC 61000-4-4, 2 kV/5 kHz, Second environment, Criterion B
Dielectrical strength		Input to output: 3600 V AC/5100 V DC Input to earth: 2000 V AC/2828 V DC
THD		
((depends on size))		
Acoustic		
Average noise level (cooling fan) sound power level in dB(A)		TBD
Noise Level		EN 61800-5-1 (2007)
Climatic proofing		< 95%, average relative humidity (RH), non-condensing, non-corrosive
Ambient temperature		
110% overload (1 min./10 min.)	°C	-30 - +40 (max. +55 with 1% derating per Kelvin temperature rise)
150% overload (1 min./10 min.)	°C	-30 - +50 (max. +60 with 1% derating per Kelvin temperature rise)
T_{min}	°C	-30
T_{max}	°C	60
Ambient conditions		IEC 60068-2-60 Test Parameter: Flowing mixed gas corrosion test, Method 1 (H2S [hydrogen sulfide] and SO2 [sulfur dioxide])
Ambient air according to IEC/EN 60721-3-3 ((class beyond EN60721-3-3 is missing))		3C2, 3S2
Storage temperature	°C	-40 - +70
Altitude		by voltage
permissible network configurations		TN-S, TN-C, TN-C-S, TT, IT
Mounting position		vertical
Protection type		EN 60529:1992
DG1-…-C21C		IP21 / NEMA Type 1
DG1-…-C54C		IP54 / NEMA Type 12 (keypad required)
Protection against contact		BGV A3 (VBG4, finger- and back-of-hand proof)
Overvoltage category		III
Pollution degree		2
Mechanical shock resistance		EN 61800-5-1, EN 60068-2-27 | UPS drop test (for weights inside the UPS frame) | Storage and transportation: maximum 15 g, 11 ms (inside the packaging)

		Unit	Value
Main circuit			
Rated operating voltage (three-phase)			
DG1-32…		V	208 (-10%) - 240 (+10%)
DG1-34…		V	380 (-10%) - 500 (+10%)
DG1-35…		V	500 (-10%) - 600 (+10%)
Tolerance up		%	10
Tolerance dwn		%	15
Mains frequency		Hz	50/60
Tolerance		%	10
Mains frequency range		Hz	45 - 66
Mains switch-on frequency			Maximum of one time every 60 seconds
Overload withstand capability			Overload cycle for 60 s every 600 s
IL (1 min./10 min.)		%	110
IH (1 min./10 min.)		%	150
Comment			Rated operational current for a standard switching frequency and an ambient temperature of +50°C for a 150% overload and +40°C for a 110% overload
Short-time overload withstand capability (2 sec / 20 sec)		%	200
Peak-overload cycle			for 2 seconds every 20 seconds
Output voltage at U_e		V	0 - U_{in}
Integrated DC link choke	u_k	%	5
Rated surge voltage invariability		U_{imp} 1.2/50 µs	
Rated insulation voltage U_i		V	
Actuating circuit			
External control voltage	U_c	V	24 V DC (max. 250 mA options incl.)
Permissible residual ripple			
Reference voltage			
Analog input 1 (voltage)		V DC	0 - 10, 2 - 10, variable - 10
Analog input 2 (voltage)		V DC	0 - 10, 2 - 10, variable - 10, -10 - +10, variable negative to variable positive
Analog input 1&2 (current)		mA	0 - 20, 4 - 20, variable - 20
Internal reference voltage			10 V DC (max. 10 mA)
Setpoint input (resolution)			
Analog input		%	0.1% (10-bit), accuracy +1%
Keypad input		Hz	0.01
Frequency resolution		Hz	0.01
Variable frequency drive functions			
Ramp times			
Startup		s	0.1 - 3000
Delay		s	0.1 - 3000
Control types			U/f control | Speed control with slip compensation | sensorless vector control (SLV) | torque regulation
Inputs / outputs			
Digital Inputs			8, parameterizable, max. 30 V DC
Digital Outputs			1, parameterizable, 24 V DC
Analog inputs			2, parameterizable, 0 - 10 V DC, 2 - 10 V DC, -10 - +10 V DC, 0/4 - 20 mA
Analog Outputs			2, parameterizable, 0 - 10 V, 0/4 - 20 mA
Relay			3, parameterizable, 2 changeover contacts and 1 N/O, 6 A (240 V AC) / 6 A (24 V DC)
Communication			
on-board			Modbus RTU, Modbus TCP, BACnet MS/TP, Ethernet IP
optional			Profibus, CAN, DeviceNet, SmartwireDT, i.V.: Profinet
SmartWire-DT connection			DXG-NET-SWD
Fault Current protection			RCD Type B (AC/DC sensitive)
Safety functions			STO (Safe Torque Off, SIL1, PLc Cat 1)
Real time clock			Yes
Plug-in terminal strips			Yes
Keypad (…-C…)			Multi-line LCD keypad, removable, can be installed in remote location
Display			Yes
Keypad			Yes
Variable frequency drive configuration			Variable frequency drive with internal DC link, DC link choke and IGBT inverter
Variable frequency drive type			U converter
Application field			For normal internally and externally ventilated four-pole three-phase asynchronous motors with 1500 rpm at 50 Hz and 1800 rpm at 60 Hz

Connection examples

Connection example for DG1 with the following functions:
① Setpoint input via external analog setpoint AI2
② Process value feedback via AI1 and PID control

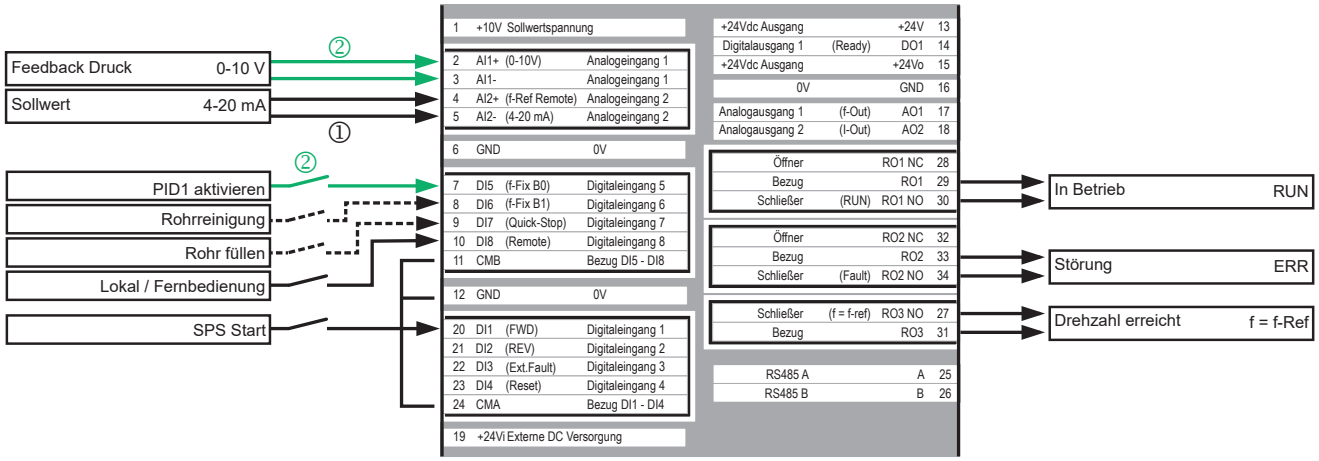

Default
AI1: 0-10V
AI2: 0-20mA

	OFF	ON
AI1	1	
AI2	2	
AI2	3	

Connection example for master-follower operation. The droop function is used ④
The same setpoint input / PID use specifications as for the previous example apply here as well.

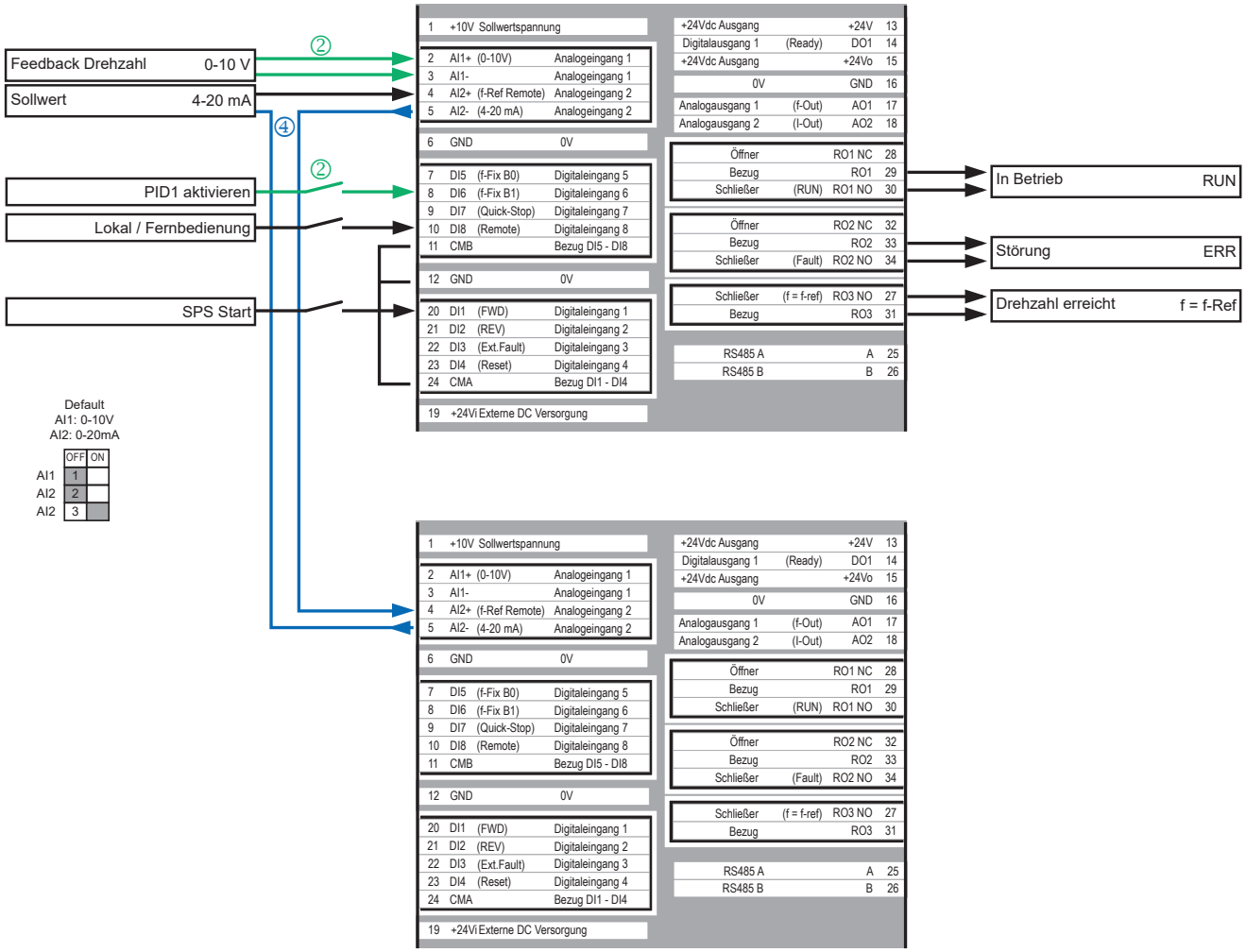

Default
AI1: 0-10V
AI2: 0-20mA

	OFF	ON
AI1	1	
AI2	2	
AI2	3	

Dimensions and weights

DG1

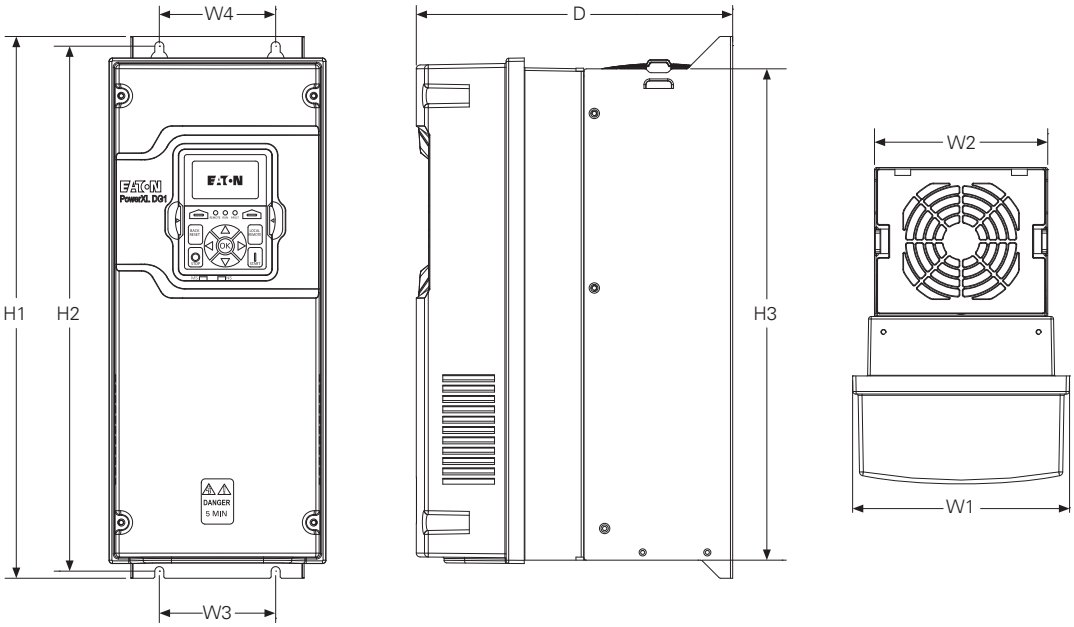

Frame size	D	H1 Chaser light on times	H2 Chaser light on times	H3 Chaser light on times	W1	W2	W3	W4	Ø	Weight
	mm	mm	mm	mm	mm	mm	mm	mm	mm	kg
FR0	173.5	268.7	258.0	242.3	127.0	126.3	108.3	108.3	7.0	2.0
FR1	200.9	327.0	312.0	292.0	153.0	122.0	100.0	100.0	7.0	6.5
FR2	244.7	419.0	406.0	380.0	167.8	134.0	90.0	90.0	7.0	10.6
FR3	265.1	558.0	545.0	518.5	204.6	184.0	125.0	125.0	9.0	22.6
FR4	294.0	630.0	617.5	590.7	237.7	232.0	205.0	205.0	9.0	35.2
FR5	340.7	888.5	753.0	707.0	288.0	282.0	220.0	220.0	9.0	70.0
FR6	371.1	1035.1	845.1	797.1	485.9	480.1	400.1	400.1	9.0	112.0

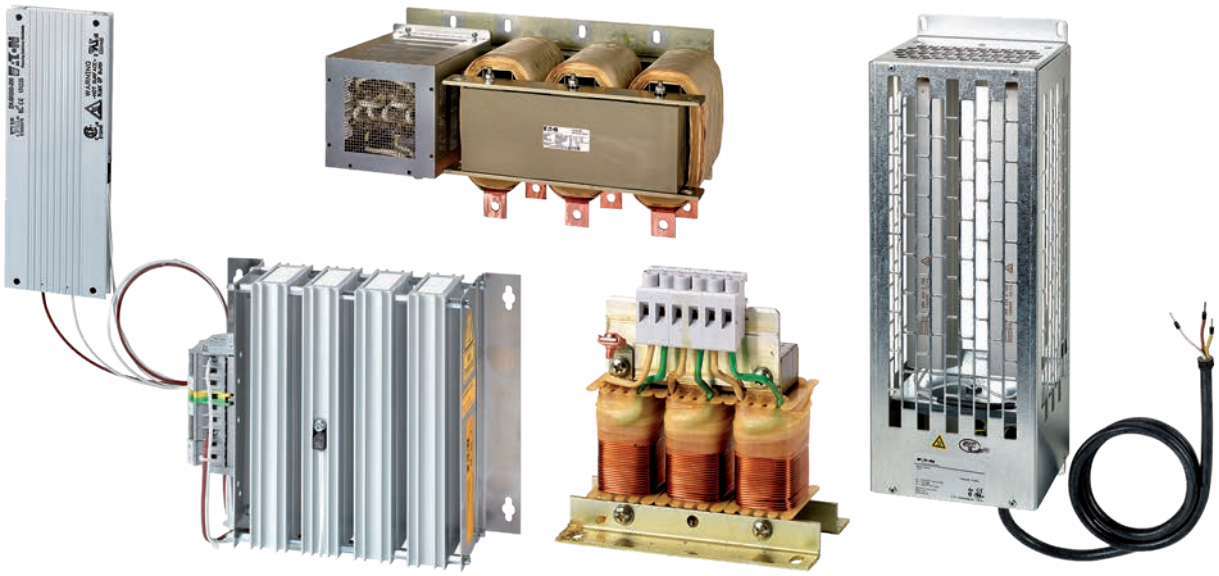

General accessories and engineering

With PowerXL variable speed starters and PowerXL variable frequency drives, you can rest assured knowing that your variable-speed power drive system (PDS) needs will be well taken care of. These units are known for their compact design and wide applicability, making them the ideal choice for most applications on the global market.

Additional options such as mains chokes, motor chokes, sine filters, and braking resistors make it possible not only to expand the devices' range of applications, but also to adapt to a variety of EMC environments and mains-side operating conditions.





2.7 General accessories

Description **214**
Ordering **215**
Mains choke **215**
400 V passive harmonic filters / radio interference suppression filters **216**
Radio interference suppression filter **217**
Motor choke **219**
Sine filter **220**
All-pole sine filters 400 V **221**
Braking resistances **222**
Engineering **226**
Components of the Power Drives System (PDS) **226**
General information on Engineering **227**
DM1 connection example **229**

Description

The voltage drop at the chokes and filters must be taken into account in the design. A voltage drop of 5% can be assumed across the board for all devices. For detailed specifications for specific cases, please contact Eaton.

DX-LN… mains chokes

DX-LN1…: single-phase, max. 260 V, 50/60 Hz, 6 - 32 A
DX-LN3…: three-phase, max. 550 V, 50/60 Hz, 4 - 450 A

DX-PHF… passive harmonic filters

- three-phase, 0 - 520 V, 0 - 150 Hz, 10 - 433 A
- the THDi for the typical operating range can be reduced to less than 8% with a harmonic filter. The value will drop as low as 5% above speeds of 50%.

Radio interference suppression filter DX-EMC…

Leakage current: normal filters: 20 - 37 mA; low leakage current: < 7 mA; super low leakage current: < 3 mA (230 V) or < 0.4 mA (400 V) With lower leakage currents, the usable motor cable length is reduced. For detailed specifications for specific cases, please contact Eaton.

Calibrated and assigned radio interference suppression filter for Series DA1, DC1 DX-EMC12…: single-phase, with prefabricated connection cables
DX-EMC12…-SL: single-phase, 4 - 55 A, super low leakage current
DX-EMC34…: three-phase, 8 - 750 A
DX-EMC34…-L: three-phase, 8 - 750 A, low leakage current
DX-EMC34…-SL: three-phase, 8 - 250 A, super low leakage current
DX-EMC44…-L: 4-pole, 8 – 250 A, low leakage current with filtered neutral conductor

Motor choke DX-LM3…

DX-LM3…: 3-phase, max. 750 V, 0 - 400 Hz, 5 - 450 A

Sine filter DX-SIN3…

DX-SIN3…: three-phase, 0 - 520 V, 0 - 150 Hz, 4 - 480 A
Sine filters used with variable frequency drives require the frequency to be set to a fixed value within a range of 4 - 8 kHz.

DX-SIN3…-A all-pole sine filter

DX-SIN3…: three-phase, 0 - 520 V, 0 - 150 Hz, 1.3 - 110 A
Sine filters used with variable frequency drives require the frequency to be set to a fixed value within a range of 4 - 8 kHz. With all-pole filters, the maximum cable length for variable frequency drives is limited exclusively by the voltage drop on the cable.

DX-BR… braking resistance

- with prefabricated connection cables for installation in DA1, DC1
- with 1-m long connection cable, temperature monitoring switch, 75 - 400 Ω, 0.4 - 1.6 kW
- with temperature monitoring switch, 2 - 100 Ω, 0.2 - 102.4 kW

Ordering

Rated operational current	Reactor	Max. heat dissipation	For use with	Catalog Number Article no.	Std. pack
I_e	L	Pv			
A	mH	W			
Mains choke					
Ambient air temperature: +40°C, max. 70°C with derating					
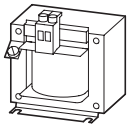					
single-phase max. permissible connection voltage V AC: 260 V + 0% (50/60 Hz)					
5.8	5.05	9	DE1, DC1, DM1	**DX-LN1-006** 269490	1 unit
8.6	3.41	11	DE1, DC1, DM1	**DX-LN1-009** 269495	
13	2.25	12	DE1, DC1, DA1, DM1	**DX-LN1-013** 269496	
18	1.63	17	DE1, DC1, DA1, DM1	**DX-LN1-018** 269497	
24	1.22	20	DE1, DC1, DA1, DM1	**DX-LN1-024** 269498	
32	0.92	24	DC1, DM1	**DX-LN1-032** 169791	
three-phase max. permissible connection voltage V AC: 550 V + 0% (50/60 Hz)					
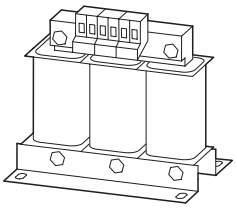					
3.9	7.51	17	DE1, DC1, DA1, DM1	**DX-LN3-004** 269500	1 unit
6	4.9	19	DE1, DC1, DA1, DM1	**DX-LN3-006** 269501	
10	2.94	33	DE1, DC1, DA1, DM1	**DX-LN3-010** 269502	
16	1.84	44	DE1, DC1, DA1, DM1	**DX-LN3-016** 269503	
25	1.18	57	DC1, DA1, DM1	**DX-LN3-025** 269504	
40	0.64	59	DA1, DM1	**DX-LN3-040** 269505	
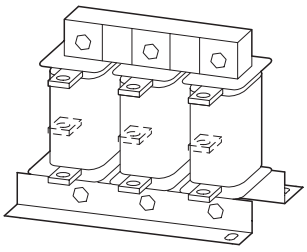					
50	0.37	58	DA1	**DX-LN3-050** 269506	
60	0.31	60	DA1	**DX-LN3-060** 269507	
80	0.23	86	DA1,	**DX-LN3-080** 269508	
100	0.18	101	DA1	**DX-LN3-100** 269509	
120	0.15	100	DA1	**DX-LN3-120** 269510	
160	0.11	140	DA1	**DX-LN3-160** 269511	
200	0.09	154	DA1	**DX-LN3-200** 269512	
250	0.07	155	DA1	**DX-LN3-250** 269513	
300	0.06	196	DA1	**DX-LN3-300** 269514	
303	0.06	230	DA1	**DX-LN3-303** 169143	
370	0.05	290	DA1	**DX-LN3-370** 169144	
450	0.04	300	DA1	**DX-LN3-450** 169145	

2.7 General accessories

400 V passive harmonic filters / radio interference suppression filters

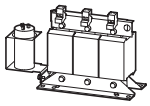

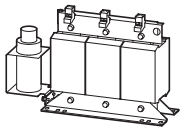

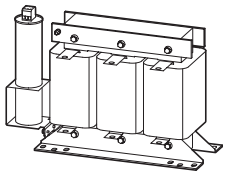

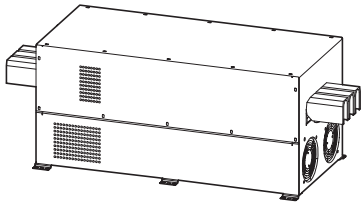

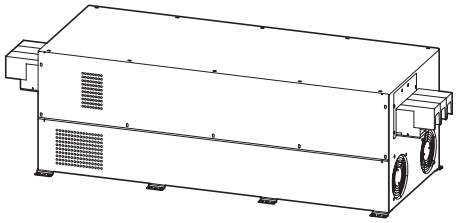

Description	Current A	For use with	Catalog Number Article no.	Std. pack
400 V passive harmonic filters				
440 V/10 A passive harmonic filters	10	DE1, DC1, DM1, DG1, DH1	**DX-PHF34-010** 400088	1 unit
440 V/19 A passive harmonic filters	19		**DX-PHF34-019** 400089	
440 V/26 A passive harmonic filters	26		**DX-PHF34-026** 400090	
440 V/35 A passive harmonic filters	35		**DX-PHF34-035** 400091	
440 V/44 A passive harmonic filters	44		**DX-PHF34-044** 400092	
440 V/72 A passive harmonic filters	73	DA1, DG1, DH1	**DX-PHF34-073** 400093	
440 V/102 A passive harmonic filters	102		**DX-PHF34-102** 400094	
440 V/144 A passive harmonic filters	144		**DX-PHF34-144** 400095	
440 V/180 A passive harmonic filters	180		**DX-PHF34-180** 400096	
440 V/217 A passive harmonic filters	217		**DX-PHF34-217** 400097	
440 V/289 A passive harmonic filters	289		**DX-PHF34-289** 400098	
440 V/325 A passive harmonic filters	325		**DX-PHF34-325** 400099	
440 V/370 A passive harmonic filters	370		**DX-PHF34-370** 400100	
440 V/433 A passive harmonic filters	433		**DX-PHF34-433** 400101	

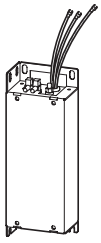

Description	Current A	For use with	Catalog Number Article no.	Std. pack
EMC base-mounted filter DC1 230 V				
Base mounted EMC filter 240V/14A	14	DE1, DE11, DC1, DM1	**DX-EMC12-014-FS1** 172273	1 unit
Base mounted EMC filter 240V/14A	14		**DX-EMC12-014-FS2** 172275	
Base mounted EMC filter 240V/19A	19		**DX-EMC12-019-FS1** 172274	
Base mounted EMC filter 240V/25A	25		**DX-EMC12-025-FS2** 172276	
Base mounted EMC filter 240V/31A	31		**DX-EMC12-031-FS3** 172277	

	Connection type	Rated operational current I_e A	For use with[1]	Protection type	Catalog Number Article no.	Std. pack
	Radio interference suppression filter					
	Separate positioning					
	three-phase, mains voltage (50/60Hz) ULN [V] max. 520 + 10%, leakage current 20 - 60 mA					
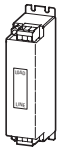	Screw terminal, PE stud	8	DE1, DC1, DA1, DG1, DM1	IP20	**DX-EMC34-008** 184500	1 unit
		16	DE1, DC1, DA1, DG1, DM1		**DX-EMC34-016** 184501	
		30	DC1, DA1, DG1, DM1		**DX-EMC34-030** 184502	
		42	DC1, DA1, DG1, DM1		**DX-EMC34-042** 184503	
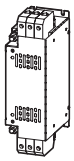		55	DC1, DA1, DG1, DM1		**DX-EMC34-055** 184504	
		75	DA1, DG1		**DX-EMC34-075** 184505	
		100	DA1, DG1		**DX-EMC34-100** 172285	
		130			**DX-EMC34-130** 172286	
		180			**DX-EMC34-180** 172287	
		250			**DX-EMC34-250** 172288	
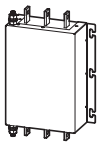	Flat copper bar, PE stud	400		IP00	**DX-EMC34-400** 172289	
		750			**DX-EMC34-750** 177636	
	Low leakage current (6 - 8 mA)					
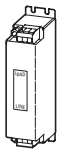	Screw terminal, PE stud	8	DE1, DC1, DA1, DG1, DM1	IP20	**DX-EMC34-008-L** 184506	1 unit
		16	DE1, DC1, DA1, DG1, DM1		**DX-EMC34-016-L** 184507	
		30	DC1, DA1, DG1, DM1		**DX-EMC34-030-L** 184508	
		42	DC1, DA1, DG1, DM1		**DX-EMC34-042-L** 184509	
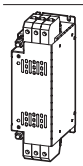		55	DC1, DA1, DG1, DM1		**DX-EMC34-055-L** 184510	
		75	DA1, DG1		**DX-EMC34-075-L** 184511	
		100	DA1, DG1		**DX-EMC34-100-L** 174611	
		130			**DX-EMC34-130-L** 174612	
		180			**DX-EMC34-180-L** 174613	
		250			**DX-EMC34-250-L** 174614	
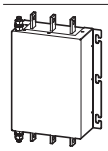	Flat copper bar, PE stud	400	DA1, DG1	IP00	**DX-EMC34-400-L** 174615	
		750			**DX-EMC34-750-L** 177637	

Notes

[1] See assigned switching and protective elements for an article-specific selection.

2.7 General accessories

Radio interference suppression filter

	Description	Current	For use with	Catalog Number Article no.	Std. pack
		A			
	EMC filter 230 V, extra low leakage current (< 0.4 mA)				
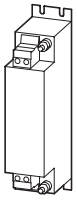	Extra low leakage current EMC filter 240V/4A	4	DE1, DC1, DA1, DM1, DG1	**DX-EMC12-004-SL** 400102	1 unit
	Extra low leakage current EMC filter 240V/8A	8		**DX-EMC12-008-SL** 400103	
	Extra low leakage current EMC filter 240V/12A	12		**DX-EMC12-012-SL** 400104	
	Extra low leakage current EMC filter 240V/16A	16		**DX-EMC12-016-SL** 400105	
	Extra low leakage current EMC filter 240V/20A	20		**DX-EMC12-020-SL** 400106	
	Extra low leakage current EMC filter 240V/25A	25		**DX-EMC12-025-SL** 400107	
	Extra low leakage current EMC filter 240V/30A	30		**DX-EMC12-030-SL** 400108	
	Extra low leakage current EMC filter 240V/42A	42		**DX-EMC12-042-SL** 400109	
	Extra low leakage current EMC filter 240V/55A	55		**DX-EMC12-055-SL** 400110	
	EMC filter 400 V, extra low leakage current (< 0.4 mA)				
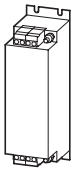	Extra low leakage current EMC filter 440V/8A	8	DE1, DC1, DA1, DM1, DG1	**DX-EMC34-008-SL** 400111	1 unit
	Extra low leakage current EMC filter 440V/12A	12		**DX-EMC34-012-SL** 400112	
	Extra low leakage current EMC filter 440V/16A	16		**DX-EMC34-016-SL** 400113	
	Extra low leakage current EMC filter 440V/30A	30		**DX-EMC34-030-SL** 400114	
	Extra low leakage current EMC filter 440V/42A	42		**DX-EMC34-042-SL** 400115	
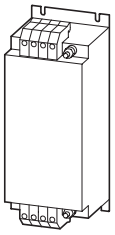	Extra low leakage current EMC filter 440V/55A	55		**DX-EMC34-055-SL** 400116	
	Extra low leakage current EMC filter 440V/75A	75	DA1, DG1	**DX-EMC34-075-SL** 400117	
	Extra low leakage current EMC filter 440V/100A	100		**DX-EMC34-100-SL** 400118	
	Extra low leakage current EMC filter 440V/130A	130		**DX-EMC34-130-SL** 400119	
	Extra low leakage current EMC filter 440V/180A	180		**DX-EMC34-180-SL** 400120	
	Extra low leakage current EMC filter 440V/250A	250		**DX-EMC34-250-SL** 400121	

	Description	Current	For use with	Catalog Number Article no.	Std. pack
		A			
	EMC filter 400 V, 4 pole, leakage current 6 - 8 mA				
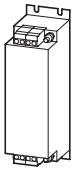	Low leakage current EMC filter 440V/8A	8	DE1, DC1, DA1, DM1, DG1	**DX-EMC44-008-L** 400143	1 unit
	Low leakage current EMC filter 440V/16A	16		**DX-EMC44-016-L** 400144	
	Low leakage current EMC filter 440V/30A	30		**DX-EMC44-030-L** 400145	
	Low leakage current EMC filter 440V/42A	42		**DX-EMC44-042-L** 400146	
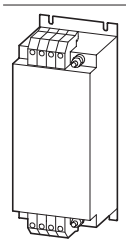	Low leakage current EMC filter 440V/55A	55		**DX-EMC44-055-L** 400147	
	Low leakage current EMC filter 440V/75A	75	DA1, DG1	**DX-EMC44-075-L** 400148	
	Low leakage current EMC filter 440V/100A	100		**DX-EMC44-100-L** 400149	
	Low leakage current EMC filter 440V/130A	130		**DX-EMC44-130-L** 400150	
	Low leakage current EMC filter 440V/180A	180		**DX-EMC44-180-L** 400151	
	Low leakage current EMC filter 440V/250A	250		**DX-EMC44-250-L** 400152	

Motor choke

Ambient air temperature: +40°C, max. 70°C with derating

three-phase
max. permissible connection voltage V AC: 750 V + 0% (0 - 400 Hz)
Max. permissible pulse frequency: $f_{PWM} \leq 12$ kHz (rms)

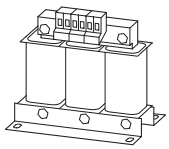

Rated operational current I_e A	Inductance L mH	Max. heat dissipation Pv W	For use with	Catalog Number Article no.	Std. pack
8	4.1	54	DE1, DC1, DA1, DG1, DM1	**DX-LM3-008** 269539	1 unit
11	3	71	DE1, DC1, DA1, DG1, DM1	**DX-LM3-011** 269541	
16	1.5	78	DE1, DC1, DA1, DG1, DM1	**DX-LM3-016** 269542	
35	1	116	DC1, DA1, DG1, DM1	**DX-LM3-035** 269543	
50	0.6	168	DA1, DG1, DM1	**DX-LM3-050** 269544	

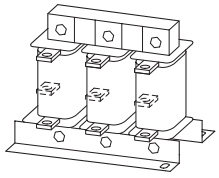

63	0.5	193	DA1, DG1	**DX-LM3-063** 269545	1 unit
80	0.5	206	DA1, DG1	**DX-LM3-080** 269546	
100	0.45	294	DA1, DG1	**DX-LM3-100** 269547	
150	0.35	424	DA1, DG1	**DX-LM3-150** 269548	
180	0.3	439	DA1, DG1	**DX-LM3-180** 269549	
220	0.2	517	DA1, DG1	**DX-LM3-220** 269560	
260	0.15	520	DA1, DG1	**DX-LM3-260** 269561	
303	0.15	–	DA1	**DX-LM3-303** 169146	
370	0.12	–	DA1	**DX-LM3-370** 169147	
450	0.1	–	DA1	**DX-LM3-450** 169148	

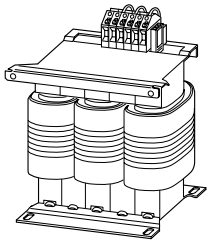

Rated operational current	Inductance	Max. heat dissipation	For use with	**Catalog Number** Article no.	Std. pack
I_e	L	Pv			
A	mH	W			
Sine filter					
Ambient air temperature: +40°C, max. 50°C with derating					
three-phase max. permissible connection voltage V AC: 520 V + 0% (0 - 150 Hz) Max. permissible pulse frequency: f_{PWM} = Constant 4 - 8 kHz (rms).					
4	11	50	DC1, DA1, DM1, DG1. DH1	**DX-SIN3-004** 271538	1 unit
10	5.1	100		**DX-SIN3-010** 271590	
16.5	3.07	70		**DX-SIN3-016** 271591	
23.5	2.5	125		**DX-SIN3-023** 271593	
32	2	100		**DX-SIN3-032** 271594	
37	1.7	100		**DX-SIN3-037** 271595	
48	1.2	240		**DX-SIN3-048** 271597	
61	1	280	DA1, DG1, DH1	**DX-SIN3-061** 271599	
72	0.95	300		**DX-SIN3-072** 271600	
90	0.8	290		**DX-SIN3-090** 271601	
115	0	460		**DX-SIN3-115** 271602	
150	0.5	530		**DX-SIN3-150** 271603	
180	0.4	500		**DX-SIN3-180** 271604	
250	0.35	550		**DX-SIN3-250** 271605	
480	0.14	1550		**DX-SIN3-480** 169149	

	Description	Current A	For use with	**Catalog Number** Article no.	Std. pack
	All-pole sine filters 400 V				
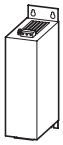	All-pole sine filters 440V/1.3A	1.3	DC1, DA1, DM1, DG1. DH1	**DX-SIN3-1D3-A** 400085	1 unit
	All-pole sine filters 440V/2.5A	2.5		**DX-SIN3-2D5-A** 400086	
	All-pole sine filters 440V/4A	4		**DX-SIN3-004-A** 400087	
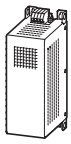	All-pole sine filters 440V/6A	6		**DX-SIN3-006-A** 184492	
	All-pole sine filters 440V/13A	13		**DX-SIN3-013-A** 184493	
	All-pole sine filters 440V/24A	24		**DX-SIN3-024-A** 184494	
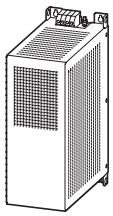	All-pole sine filters 440V/46A	46		**DX-SIN3-046-A** 184495	
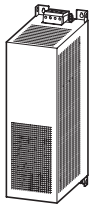	All-pole sine filters 440V/65A	65	DA1, DG1, DH1	**DX-SIN3-065-A** 184496	
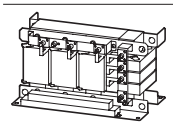	All-pole sine filters 440V/110A	110		**DX-SIN3-110-A** 197529	

2.7 General accessories

Braking resistances

	Resistance value	Continuous braking power	Protection type	For use with[1]	Catalog Number Article no.	Std. pack
	R	PDB				
	Ω	kW				
	Braking resistances					
	Wire wound resistor in aluminum case for direct installation in Variable frequency drive enclosure of frame sizes FS2 and FS3. With prefabricated connection cable					
	100	0.2	IP54	DC1, DA1	**DX-BR3-100** 169150	1 unit
	Wire wound resistor in ceramic potting compound inside aluminum case for direct installation in Variable frequency drive enclosure of frame sizes FS4 and FS5.					
	33	0.5	IP54	DA1	**DX-BR5-033** 169151	1 unit
	Wire wound resistor in ceramic potting compound inside aluminum case with temperature monitoring switch with connection cables (approx. 0.5 m long)					
	27	0.24	IP65	DC1, DA1, DG1, DM1	**DX-BR027-240** 174243	1 unit
	40	0.2			**DX-BR040-200** 174242	
	47	0.24			**DX-BR047-240** 174236	
	50	0.2			**DX-BR050-200** 174235	
	100	0.1			**DX-BR100-100** 174241	
	100	0.2			**DX-BR100-200** 174237	
	100	0.24			**DX-BR100-240** 174238	
	150	0.2			**DX-BR150-200** 174248	
	210	0.2			**DX-BR210-200** 174247	
	430	0.1			**DX-BR430-100** 174246	

Notes [1] See assigned switching and protective elements for an article-specific selection.

Resistance value	Continuous braking power	Protection type	For use with[1]	Catalog Number Article no.	Std. pack
R	PDB				
Ω	kW				
Braking resistances					
Resistor combination (size 1) with temperature monitoring switch with connection terminals					
20	0.96	IP20	DC1, DA1, DG1, DM1	**DX-BR020-960** 174257	1 unit
24	0.4			**DX-BR024-400** 174244	
24	0.6			**DX-BR024-600** 174267	
24	0.72			**DX-BR024-720** 174245	
42	0.72			**DX-BR042-720** 174266	
50	0.4			**DX-BR050-400** 174239	
50	0.6			**DX-BR050-600** 174240	
50	0.72			**DX-BR050-720** 174265	
50	0.96			**DX-BR050-960** 174250	
75	0.4			**DX-BR075-400** 174249	
100	0.6			**DX-BR100-600** 174251	
100	0.72			**DX-BR100-720** 174252	
100	0.96			**DX-BR100-960** 174253	
150	0.8			**DX-BR150-800** 174262	
216	0.6			**DX-BR216-600** 174268	
400	0.4			**DX-BR400-400** 174261	
Resistor combination (size 2) with temperature monitoring switch with connection terminals					
25	1.44	IP20	DC1, DA1, DG1, DM1	**DX-BR025-1440** 174258	1 unit
25	1.92			**DX-BR025-1920** 174259	
27	2.88			**DX-BR027-2880** 174260	
50	1.44			**DX-BR050-1440** 174254	
50	1.92			**DX-BR050-1920** 174255	
50	2.88			**DX-BR050-2880** 174264	
54	2.88			**DX-BR054-2880** 174256	
84	1.44			**DX-BR084-1440** 174263	

Notes [1] See assigned switching and protective elements for an article-specific selection.

Braking resistances

Resistance value	Continuous braking power	Protection type	For use with[1]	**Catalog Number** Article no.	Std. pack
R	PDB				
Ω	kW				
Braking resistances					
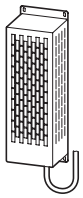 Wire wound resistor in ceramic potting compound inside aluminum case, combined Installed in a housing designed to prevent accidental contact and featuring a temperature monitoring switch and a 1-meter connection cable					
75	1.1	IP20	DA1, DG1, DM1	**DX-BR075-1K1** 171917	1 unit
100	0.8	IP20		**DX-BR100-0K8** 171907	
100	1.1	IP20		**DX-BR100-1K1** 171896	
100	1.6	IP20		**DX-BR100-1K6** 171924	
150	0.5	IP20		**DX-BR150-0K5** 171916	
150	1.1	IP20		**DX-BR150-1K1** 171895	
200	0.4	IP20		**DX-BR200-0K4** 171915	
200	0.8	IP20		**DX-BR200-0K8** 171894	
400	0.4	IP20		**DX-BR400-0K4** 171914	
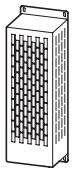 Wire wound resistor in ceramic potting compound inside aluminum case, combined Installed in a housing designed to prevent accidental contact and featuring a temperature monitoring switch and internal connecting terminals					
35	1.1	IP20	DA1, DG1, DM1	**DX-BR035-1K1** 171927	1 unit
50	0.4	IP20		**DX-BR050-0K4** 171906	
50	0.8	IP20		**DX-BR050-0K8** 171910	
100	0.2	IP20		**DX-BR100-0K2** 171909	
100	0.4	IP20		**DX-BR100-0K4** 171926	

Notes [1] See assigned switching and protective elements for an article-specific selection.

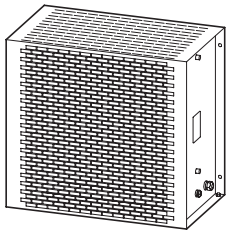

Resistance value	Continuous braking power	Protection type	For use with[1]	Catalog Number Article no.	Std. pack
R	PDB				
Ω	kW				
Braking resistances					
Steel grid resistor, combined Installed in a housing designed to prevent accidental contact and featuring a temperature monitoring switch and internal connection terminals/terminal bolts					
2	54.3	IP20	DC1, DA1, DG1, DM1	**DX-BR002-54K3** 171923	1 unit
	102.4			**DX-BR002-102K4** 171903	
6	5.1			**DX-BR006-5K1** 171913	
	9.2			**DX-BR006-9K2** 171893	
	18.1			**DX-BR006-18K1** 171922	
	33.3			**DX-BR006-33K3** 171902	
12	3.1			**DX-BR012-3K1** 171912	
	5.1			**DX-BR012-5K1** 171929	
	9.2			**DX-BR012-9K2** 171921	
	18.1			**DX-BR012-18K1** 171901	
22	1.4			**DX-BR022-1K4** 171911	
	3.1			**DX-BR022-3K1** 171928	
	5.1			**DX-BR022-5K1** 171920	
	9.2			**DX-BR022-9K2** 171900	
40	3.1			**DX-BR040-3K1** 171919	
	5.1			**DX-BR040-5K1** 171899	
47	3.1			**DX-BR047-3K1** 171908	
	5.1			**DX-BR047-5K1** 171925	
	9.2			**DX-BR047-9K2** 171905	
50	3.1			**DX-BR050-3K1** 171918	
	5.1			**DX-BR050-5K1** 171898	
75	5.1			**DX-BR075-5K1** 171897	
100	6.2			**DX-BR100-6K2** 171904	

Notes [1] See assigned switching and protective elements for an article-specific selection.

Engineering

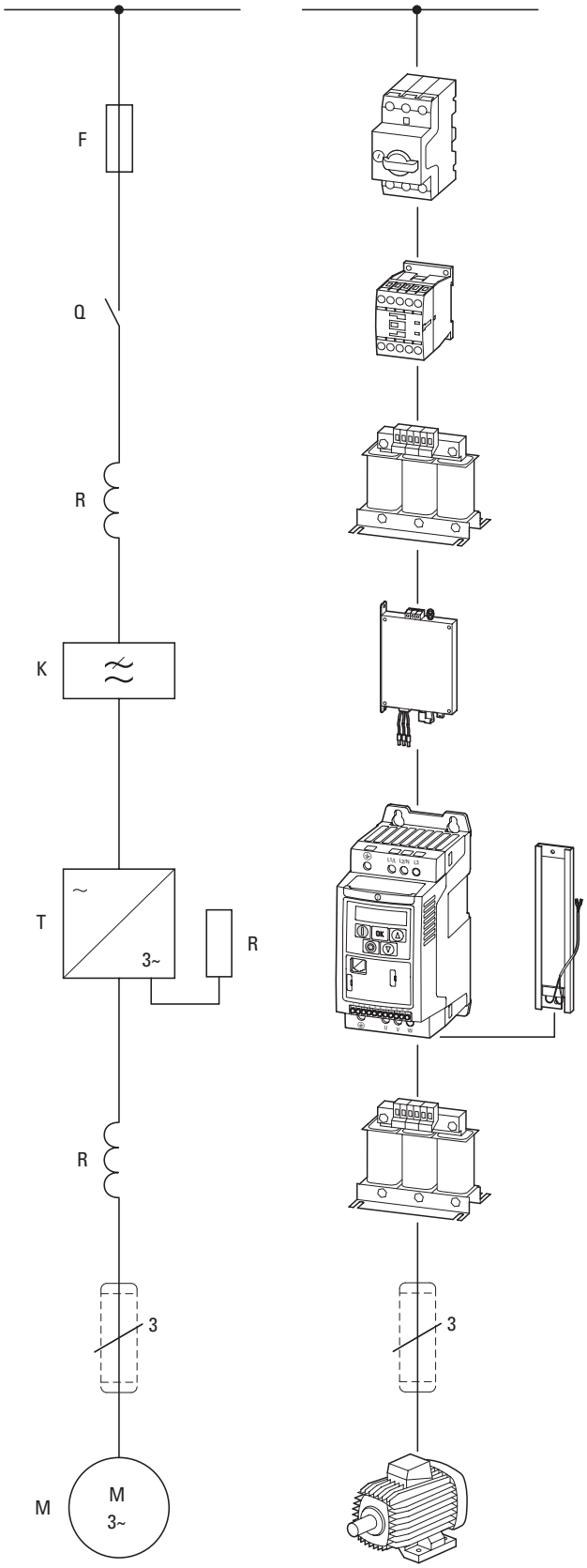

Equipment code
F = fuses and circuit-breakers
Q = controlled switching within energy flow (contactors, circuit-breakers
R = limitation (reactors, resistors)
K = radio interference suppression filters
T = variable-frequency drives
M = motors

AC supply system: variable-frequency drives can be connected without restriction to AC supply systems with an earthed star point (TN/TT grounding systems). Directly connecting them to and running them on unbalanced or B phase-grounded systems (e.g., USA) is not permissible.
Fuses (circuit-breakers) enable you to protect wiring and electrical devices and appliances. For personal protection, additional AC/DC sensitive residual current circuit-breakers (RCD type B) are required.

Contactors serve to engage and disengage mains voltage.

Mains chokes damp any harmonic distortion (THD) that occurs as well as current spikes and limit inrush currents (the link capacitor's charging current). In addition, they protect the mains rectifier from voltage peaks coming from the supply mains.

Passive harmonic filters reduce harmonic currents (THDi) so that limits required by standards can be met. They protect the connected electrical power network from the effects of line side harmonics and improve the system's interference immunity.

Radio interference suppression filters damp high-frequency electromagnetic emissions from devices and appliances. They ensure that the EMC limit values for conducted interference specified in the applicable product standards are complied with (variable-frequency drives).
Note: External radio interference suppression filters (option) permit longer motor cables and have low leakage currents. Normally, they should only be used with variable-frequency drives that do not feature an internal radio interference suppression filter.
Exception: directly assigned variable-frequency drives with internal filters (calibrated combination)

Variable frequency drives enable the infinitely variable speed control of three-phase motors. To do this, the variable-frequency drive converts the voltage of the AC supply system with a constant voltage and a constant frequency to a new AC voltage with a variable amplitude and a variable frequency.

A **braking resistance** converts the generator braking energy of the variable frequency drive into heat. The variable frequency drive must be equipped with a brake chopper, which connects the braking resistance parallel to the internal DC link.

Motor chokes
- Compensate the capacitive capacitive currents,
- Reduce current ripple and the motor's current change noise,
- Attenuate the retroaction on parallel connection of several motors.

Sine filter or du/dt filter
- Smoothen the output voltage sinusoidally,
- reduce motor noise through du/dt reduction, and thereby increase the motor insulation's lifespan,
- Reduce the leakage currents to allow better motor performance at improved EMC values.

All-pole sine filter
- Smoothen the output voltage sinusoidally,
- reduce motor noise through du/dt reduction, and thereby increase the motor insulation's lifespan,
- Reduce leakage currents and accordingly make it possible to use very long unshielded motor cables with improved EMC values.

Screened motor cables attenuate emitted and conducted high-frequency emissions within the limit values specified in the applicable product standard (EMC). They must be connected to the earth potential on both sides across a large area (PES).

A three-phase asynchronous motor (standard motor) converts electrical power (P ~ U × I) into mechanical power (P ~ M × n).

Electrical mains connection

Variable frequency drives can be connected and operated without restriction on star-point-grounded AC supply systems (according to IEC 60364).

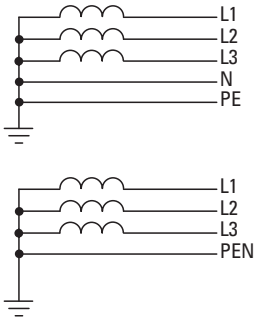

Connecting them to and operating them on asymmetrically earthed networks, such as phase-earthed delta networks (grounded delta, USA) or non-earthed or high-resistance earthed (> 30 Ω) IT networks is permitted with limitations. In these networks, only variable frequency drives without internal radio interference suppression filters (EMC) may be used. On devices with internal radio interference suppression, the ground connection of the filter must be disconnected.

The standardized rated operating voltages of the power supply (EVU) assure the following conditions at the transfer point to the consumer:

- maximum deviation from the rated voltage (U_{LN}): ±10%
- Maximum deviation in the voltage symmetry: ±3%
- Maximum deviation from the rated frequency value: ±4%

A further voltage drop of 4 percent in the consumer networks is permissible in relation to the lower voltage value (U_{LN} -10%) of the mains voltage.

In mesh networks (such as those found in the EU), the standardized consumer voltages (230/400/690 V) are identical to the utility company's supply voltages. In star networks (for example in North America/USA), the stated consumer voltages take the voltage drop from the utility company's infeed point to the last consumer into account.

North American voltage level

Supply voltage U_{LN} of the EVU	Motor voltage according to UL 508 C	Consumer voltage, rated value for the motors
120 V	110 - 120 V	115 V
240 V	220 - 240 V	230 V
400 V	440 - 480 V	460 V
600 V	550 - 600 V	575 V

Safety and switching

For variable frequency drives, the components placed on the mains-side are assigned as per the input-side rated operational current ILN and the AC-1 utilization category.

Fuses, circuit-breakers and conductor cross-sections must meet the national and regional requirements and the required approvals at the point of operation.

For fire prevention and the protection of persons and domestic animals from excessive contact voltages residual current devices (RCD) must be used. Only AC/DC sensitive residual current devices (RCD, type B) may be used in connection with a variable frequency drive that works with a three-phase power supply.

Marking on residual current devices for AC/DC sensitive RCDs, type B:



Earth leakage currents will be produced when using frequency-controlled drives due to the nature of the system. The main reasons for this consist of external capacitances between the phases of the motor cable, the motor cable's screening, star capacitors in the variable frequency drive, and radio interference suppression filters, as well as earthing measures at the motor's site of operation. These leakage currents can exceed 3.5 mA (AC) and/or greater than 10 mA (DC) can require improved PDS earthing as per EN 50178 (earth cable cross-section ≥ 10 mm (cable cross-section of earthing wire ≥ 10 mm²).

EMC Measures

Variable frequency drives work with fast electronic switches (IGBT) in the inverter. This can cause radio interference in a magnet system, which, in turn, can adversely affect nearby electronic equipment. To provide protection against this high-frequency interference, said equipment should be spatially separated and screened from frequency-controlled drives.

In Europe, compliance with the EMC Directive is mandatory and a prerequisite for the CE marking. The EMC conditions for drive systems (PDS) are described in standard IEC/EN 61800-3. This product standard considers the complete magnet system from mains-side power supply right through to the motor.

The Eaton variable frequency drive and speed starter with internal/external radio interference suppressor satisfy the requirements of the EMC product standard for the sensitive residential sector (first environment) and therefore also the higher limit values in the industrial sector (second environment).

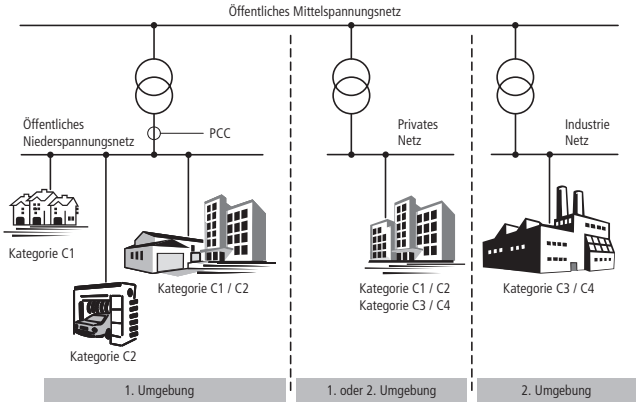

Variable frequency drives

A variable frequency drive is an electronic apparatus used for the variable-speed control of three-phase motors. It is intended for installation in a machine or for assembly with other components to a machine or plant.

The main components of a modern compact variable frequency drive are a power section ① and a control section ②.

Functional actuation of the variable frequency drive and the output parameters in the power section (e.g. frequency, voltage and current) can be adjusted through:

- Control signal terminals (I/O) with analog and digital (binary) inputs,
- A keypad with function keys and display units,
- Serial interfaces (BUS) with RS485 (Modbus RTU) and optional fieldbus connections (CANopen, PROFIBUS-DP etc.) and an optional PC connection.

Internal open and closed-loop control circuits monitor all variable values in the variable frequency drive and automatically switch the process off if a value reaches a dangerous level.

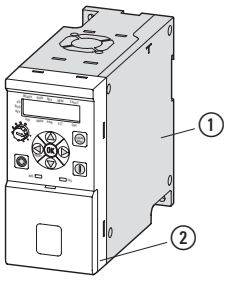

① **Power section** with:
A = Rectifier
B = Internal DC link
C = inverter (IGBT)

② **Control section** with:
I/O = Analog and binary inputs and outputs
KEYPAD = Operating unit with display unit
BUS = Serial ports/interfaces (RS485, field bus, PC interface)

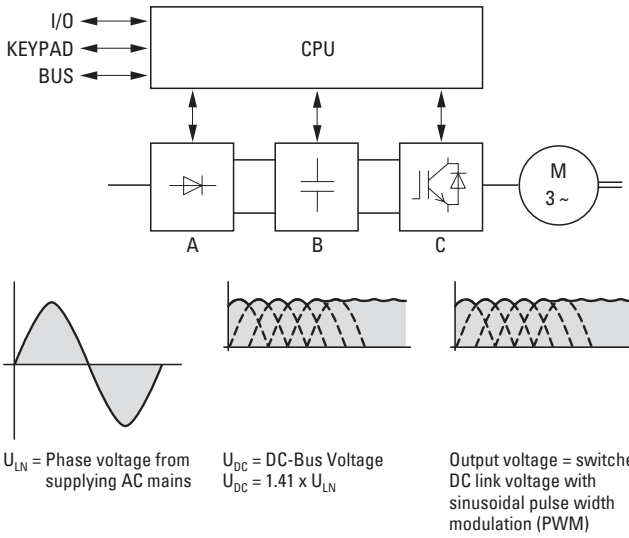

U_{LN} = Phase voltage from supplying AC mains

U_{DC} = DC-Bus Voltage
U_{DC} = 1.41 x U_{LN}

Output voltage = switched DC link voltage with sinusoidal pulse width modulation (PWM)

Block diagram with main components of a variable frequency drive

Control methods

The IGBTs in the inverter of the variable frequency drive are controlled with sinusoidal pulse-width modulation (PWM). In real-life applications, the industry draws a distinction between the following control methods:

- Voltage frequency control (U/f control),
- V/Hz control with slip compensation
- Sensorless vector control (speed control)
- Vector control (closed-loop), speed control.

Volts-per-Hertz control is the best known and most commonly used method. In it, the rotating field frequency for the motor is defined with a simple characteristic (linear or quadratic), and the corresponding three-phase line-to-line motor voltage is selected in such a way that the motor will not be undermagnetized or overmagnetized.

The main applications for V/Hz control are:

- pump and fan drives,
- horizontal conveying and transportation systems,
- multiple motor drives (parallel operation of several motors at the variable frequency drive's output).

With the **U/f control section with slip compensation** the load-dependent speed change of individual drives can be compensated for (without sensors).

With **sensorless vector control** the magnetic fields of rotor and stator are opposed to one another. With asynchronous motors the magnetic flux in the rotor must be mapped in an electronic model of the motor. This requires the input of the physical parameters of the rating plate on the motor.
In vector operation, the variable frequency drive can only control one motor at the output end. A parallel operation of several motors is not possible here. The exact calculation of the phase voltages at the variable frequency drive's output, however, improves the motor's operational behavior. The motor also heats up less in the lower speed range. The field-oriented vector control results in a significant improvement in the drive dynamics as well as optimizing performance; it also increases the range of possible applications.
The main applications of sensorless vector control are:

- Material machining and processing equipment
- Condensors (compressor),
- Heavy starting duty (extruder, agitators, mixer),
- Lifting mechanisms and lifting gear (vertical movement, crane, lift).

With the **vector feedback control** the output current of the variable frequency drive acts serves a controlled variable. This makes it possible to perfectly adjust the three-phase motor in line with the corresponding torque boost. The motor speed can be controlled in connection with an rpm sensor (tachometer, pulse generator) (closed loop).

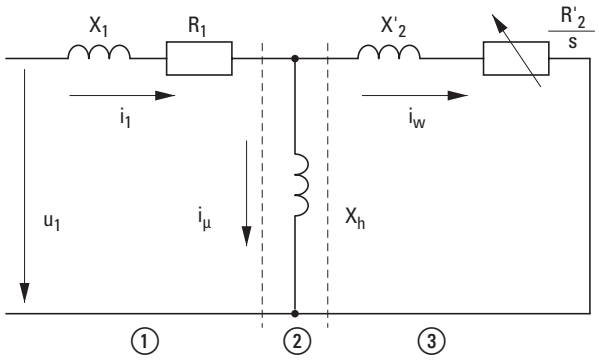

① Stator winding
② Air gap
③ Transformed rotor winding

Simplified equivalent circuit diagram of a three-phase motor

Motor model

Regardless of the control method used, a variable frequency drive uses the measured voltage and current values on the stator winding (u_1, i_1) to calculate the required manipulated variable for flux-generating component i_μ and the torque-forming magnitude in rotor i_w. The motor's load dependent slip is represented as resistor R'_2/s. During no-load operation, this value approaches infinity ($i_w \rightarrow 0$). On the other hand, the value approaches zero as the load increases. The current in the rotor grows at this point.

Explanation:

EMC = Electromagnetic Compatibility
EVU = Power supply companies
IGBT = Insulated-Gate-Bipolar-Transistor
PDS = Power Drives System
RCD = Residual Current Device

Energy-efficient drive control technology (ERP directive)

The need for energy efficiency in a PDS and legislative specifications (EC 640/2009) has been redefined by the minimum efficiency ratings of motors. Accordingly, all motors with a performance range of 0.75 to 1000 kW that are placed on the market on or after July 1st, 2021 will have to meet one of the following two requirements: A) A minimum efficiency level of IE3 or B) An efficiency level of IE2 if the motors are coupled with electronic speed control systems (variable frequency drives, variable speed starters). Under these conditions, the following versions of three-phase motor predominate at the present time:

- Three-phase asynchronous motor (DASM),
- Permanent magnet motor (PM),
- Synchronous reluctance motor (SynRM)

Within the same efficiency class, these three motor technologies have a comparable efficiency rating at their nominal operating point. However, there are significant differences in terms of startup behavior, in part-load operation, in respect of acquisition costs and in terms of size.

The asynchronous motor functions in accordance with the familiar principle whereby the creation of magnetic fields in stator and rotor give rise to repulsion and, in response to that, to rotational movement. This motor can be started directly off the mains supply.

PM motor are synchronous motors, i.e. there is no slip between the rotational fields of rotor and stator. The magnets assure magnetization of the rotor. That reduces losses in the rotor and increases the efficiency rating, especially at low speed. For starting and operational purposes, the PM motor needs to have a variable frequency drive (e.g. DG1 / DM1).

With the SynRM motor, the rotor plates have specific cut sections. These guide the magnetic lines into the interior of the rotor and generate what is known as a reluctance torque. This results in a change of magnetic resistance and is characterized from about 11 kW by a very good efficiency rating at reduced speeds that changes under load. Here too, operation without friction and optimum speed control are only assured through the use of variable frequency drives (DA1).

In principle, all three variants operate using what is known as the U/f characteristics curve but the efficiency benefits of individual technologies are only guaranteed by feedback control algorithms adapted to suit the prevailing motor technology. With algorithms of this kind, motor operation can be optimized at every operating point, even with alternating loads.

Connection example for a 0.75 kW motor

Motor: P = 0.75 kW
Mains: 3/N/PE 400 V 50/60 Hz
Connection examples meeting EMC requirements: Power section (see figure below)

The previously indicated 0.75 kW motor can be connected in a delta configuration for a single-phase 230 V supply system (version A) or in a star configuration for a 400 V supply system (version B).
Depending on the mains voltage, a variable frequency drive is selected for 230 V single-phase AC (DM1-124D8...), or a DF5-340 for 400 V 3-phase AC (DM1-342D2), together with the corresponding accessories.

Variant A:

Motor in delta configuration

DM1... variable frequency drive with single-phase mains supply (230 V)

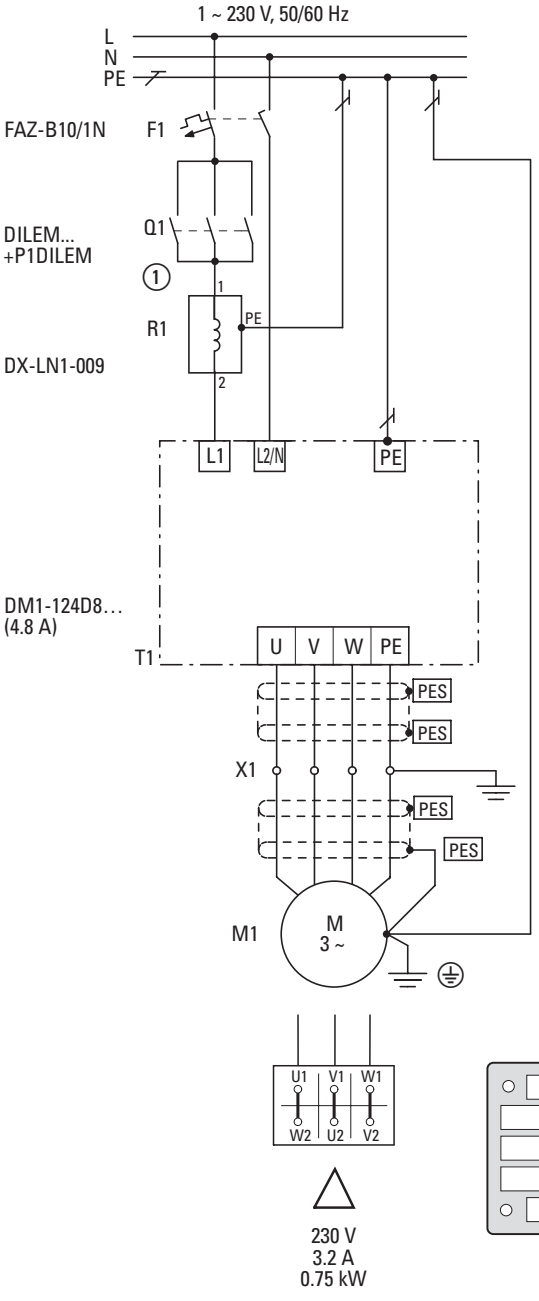

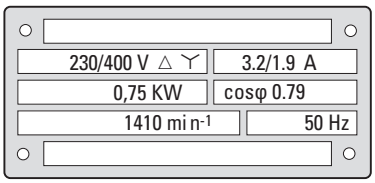

Variant B:

Motor in star configuration

DM1... variable frequency drive with three-phase mains supply (400 V)

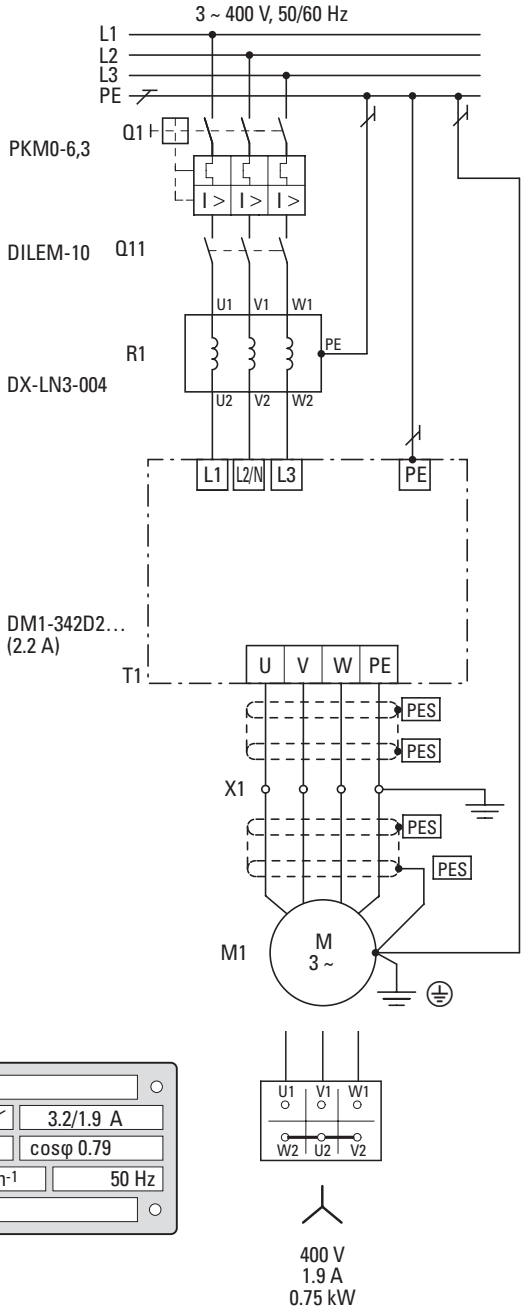

① Optional connection option for single-phase connections





Decentralized Drive System Rapid Link 5

Rapid Link 5 is a decentralized electronic drive system that can be used for simple to complex tasks in all material handling system areas. It provides all the functions needed to switch, control, protect, and network conveyor belt electric motors. Devices are installed close to motors and can be connected quickly and in a foolproof manner thanks to the use of standard plug connectors. In addition, a key switch can be used to select the manual and automatic operating modes. In automatic mode, the devices can communicate via AS-Interface, PROFINET, or EtherNet/IP.

Performance range:

RAM05 electronic motor starters

- 0.09 - 3 kW (U_e: 3~ 400 V, U_2: 3~ 400 V)

RASP5 variable frequency drives

- 0.75 - 4 kW (U_e: 3~ 400 V, U_2: 3~ 400 V)

Applications:

- Intralogistics applications
- Airport logistics / baggage conveyor systems
- Transportation and warehouse logistics
- Belt conveyors
- Roller conveyors
- Chain conveyors
- Pallet conveyors
- Lifting applications
- Corner transfer units
- Mergers / diverters
- Rotary table applications

For more information, visit:
www.Eaton.com/RapidLink5

System features:

- Communication via AS-Interface, PROFINET or Ethernet/IP
- Same base area and hole pattern for all models and power classes
- All terminals pluggable
- Integrated manual / automatic mode
- Robust design with IP65 degree of protection
- Up to 4 sensor inputs and 2 sensor outputs
- International standards (CE, UL, cUL, CCC, RoHS)

Features RAM05

- DOL and reversing starters
- Lifespan of more than 10 million operations
- Programmable motor protection from 90 W to 3 kW (400 V) in a single device

Features RASP5

- Sensorless vector control
- Can be used to drive high-efficiency permanent magnet, synchronous reluctance, and brushless DC motors
- Short-circuit proof in all operating modes
- Integrated EMC filter
- Integrated braking resistance
- Safe Torque Off (STO, SIL 3, PL e, Cat. 3)

Accessory:

- External keypad
- Parameter storage unit and Bluetooth communication stick
- Adapter cables for various power bus systems
- Motor cables
- drivesConnect parameter configuration software
- drivesConnect mobile App (iOS, Android)



3 Rapid Link 5 decentralized, electronic drive system

System overview 232
Sizes and degree of protection 232
Key to type references 233
Ordering 234
AS-Interface 234
Profinet 245
Ethernet/IP 252
Accessories 256
Engineering 257
RAMO5 with AS-Interface 257
RASP5 with AS-Interface 258
RAMO5 with PROFINET or Ethernet/IP 259
RASP5 with PROFINET or Ethernet/IP 260
Technical data 261
General rated operational data 261
Spezifische Specific rated operational data RAMO5 263
Specific rated operational data RASP5 264
Dimensions and weights 265

System overview



RAMO5 motor starter 1
Three-phase electronic DOL starter or reversing starter
→ Page 234
→ Page 245
→ Page 252

RASP5 variable frequency drives 2
three-phase, frequency-controlled motor starter
→ Page 237
→ Page 246
→ Page 253

Keypad 3
for parameter setting
→ Page 256

Communications stick 4
for parameter setting
→ Page 256

Power connection cables 5
For connection to a power bus
→ Page 256

Unscreened motor cable 6
→ Page 256

Screened motor supply cable (EMC) 7
→ Page 256

Sizes and degree of protection

Frame size	Protection type IP66/NEMA 12			
	RAMO5-…		RASP5-…	
FS1	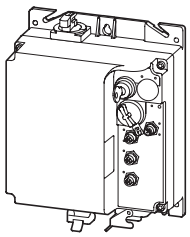	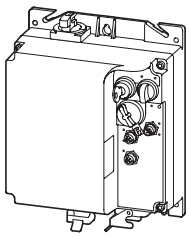	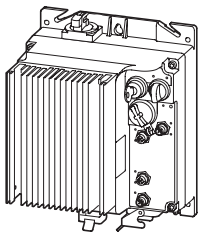	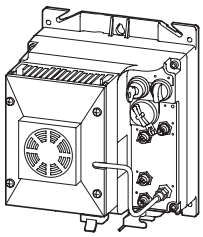

Key to type references

Electronic motor starter

RAMO5 - D 2 0 0 A31 - 512 0 S1

Device series
RA = Rapid Link
MO5 = motor starter, generation 5

Starters
D = direct-on-line starter (DOL)
W = reversing starter (FWD/REV)

Sensor inputs
2 = 2 sensor inputs (2 x M12, 2 PIN assignment)
4 = 4 sensor inputs (2 x M12, 4 PIN assignment)

Actuator outputs
0 = 0 actuator outputs (0 x M12)
1 = 1 actuator outputs (1 x M12, 2 PIN assignment)
2 = 2 actuator outputs (1 x M12, 4 PIN assignment)

Motor brake drive section
0 = No motor brake drive section
1 = 180/207 V DC motor brake drive section
2 = 230/277 V AC motor brake drive section
4 = 400/480 V AC motor brake drive section

Version
S1 = Standard

Repair switch
0 = without manual override switch
R = with manual override switch

Power input plug
512 = HAN Q5, lower input
412 = HAN Q4/2, lower input

Field bus
A31 = ASI-3 profiles S-7.4
A32 = ASI-3 profiles S-7.A.E
PNT = PROFINET
EIP = Ethernet/IP

Variable frequency drives

RASP5 - 2 4 0 0 A31 - 512 0 0 0 0 S1

Device series
RA = Rapid Link
SP5 = Speed Control Unit, Generation 5

Rated Current
2 = 2.4 A (0.75 kW @ 400 V)
4 = 4.3 A (1.5 kW @ 400 V)
5 = 5.6 A (2.2 kW @ 400 V)
8 = 8.5 A (4.0 kW @ 400 V)

Sensor inputs
4 = 4 sensor inputs (2 x M12, 4 PIN assignment)

Actuator outputs
0 = 0 actuator outputs (0 x M12)
2 = 2 actuator outputs (1 x M12, 4 PIN assignment)

Motor brake drive section
0 = No motor brake drive section
1 = 180/207 V DC motor brake drive section
2 = 230/277 V AC motor brake drive section
4 = 400/480 V AC motor brake drive section

Field bus
A31 = ASI-3 profile S-7.4
PNT = PROFINET
EIP = Ethernet/IP

Version
S1 = Standard

Fans
0 = without fan
1 = with fan (only at 4.0 kW)

Functional safety
0 = without STO
1 = with STO (Safe Torque Off)

Braking resistance
0 = without braking resistance
1 = with braking resistance

Repair switch
0 = without manual override switch
R = with manual override switch

Power input plug
512 = HAN Q5, lower input
412 = HAN Q4/2, lower input

Ordering

Rated operational current [1]	Assigned motor output [2] [3]		Control voltage external brake (50/60 Hz) [4]	Actuator output [5]	AS-Interface profile		Power supply via		Repair switch	Catalog Number Article no.	Std. pack
I_e	P	P			S-7.4 [6]	S-7.A.E [7]	HAN Q4/2 plug	HAN Q5 plug			
A	kW	HP									
RAM05 motor starter											
Rated operating voltage 400 V AC, three-phase, mains voltage (50/60Hz) U_{LN} 380 (-10%) - 480 (+10%) V											
Direct-on-line starter, 2 sensor inputs											
6.6	3	3	–	0	✓	–	✓	–	–	**RAM05-D200A31-4120S1** 199060	1 unit
					✓	–	✓	–	✓	**RAM05-D200A31-412RS1** 199069	
					✓	–	–	✓	–	**RAM05-D200A31-5120S1** 198517	
					✓	–	–	✓	✓	**RAM05-D200A31-512RS1** 198518	
					–	✓	✓	–	–	**RAM05-D200A32-4120S1** 199064	
					–	✓	✓	–	✓	**RAM05-D200A32-412RS1** 199075	
					–	✓	–	✓	✓	**RAM05-D200A32-512RS1** 199073	
			180/207 V DC		✓	–	✓	–	–	**RAM05-D201A31-4120S1** 199061	
					✓	–	✓	–	✓	**RAM05-D201A31-412RS1** 199070	
					✓	–	–	✓	✓	**RAM05-D201A31-512RS1** 199068	
					–	✓	✓	–	–	**RAM05-D201A32-4120S1** 199065	
					–	✓	✓	–	✓	**RAM05-D201A32-412RS1** 199076	
					–	✓	–	✓	✓	**RAM05-D201A32-512RS1** 199074	
			230/277 V AC		✓	–	✓	–	–	**RAM05-D202A31-4120S1** 199062	
					✓	–	✓	–	✓	**RAM05-D202A31-412RS1** 199071	
					✓	–	–	✓	–	**RAM05-D202A31-5120S1** 198519	
					✓	–	–	✓	✓	**RAM05-D202A31-512RS1** 198520	
					✓	–	–	✓	–	**RAM05-D212A31-5120S1** 198527	
					–	✓	✓	–	–	**RAM05-D202A32-4120S1** 199066	
					–	✓	✓	–	✓	**RAM05-D202A32-412RS1** 199077	
					–	✓	–	✓	–	**RAM05-D202A32-5120S1** 198521	
					–	✓	–	✓	✓	**RAM05-D202A32-512RS1** 198522	
			400/480 V AC		✓	–	✓	–	–	**RAM05-D204A31-4120S1** 199063	
					✓	–	✓	–	✓	**RAM05-D204A31-412RS1** 199072	
					✓	–	–	✓	–	**RAM05-D204A31-5120S1** 198523	
					✓	–	–	✓	✓	**RAM05-D204A31-512RS1** 198524	
					✓	–	–	✓	–	**RAM05-D214A31-5120S1** 198528	
					–	✓	✓	–	–	**RAM05-D204A32-4120S1** 199067	
					–	✓	✓	–	✓	**RAM05-D204A32-412RS1** 199078	
					–	✓	–	✓	–	**RAM05-D204A32-5120S1** 198525	
					–	✓	–	✓	✓	**RAM05-D204A32-512RS1** 198526	

Notes

[1] 0.3 - 6.6 adjustable
[2] For normal internally and externally ventilated four-pole three-phase asynchronous motors with 1500 rpm at 50 Hz and 1800 rpm at 60 Hz
[3] At 400 V, 50 Hz, at 440 - 480 V, 60 Hz
[4] For actuation of motors with electromechanical brake
[5] Operation with external 24V DC supply
[6] Profile with 31 modules
[7] Profile with 62 modules

Rated operational current [1]	Assigned motor output [2] [3]		Control voltage external brake (50/60 Hz) [4]	Actuator output [5]	AS-Interface profile		Power supply via		Repair switch	Catalog Number Article no.	Std. pack
I_e	P	P			S-7.4 [6]	S-7.A.E [7]	HAN Q4/2 plug	HAN Q5 plug			
A	kW	HP									
RAM05 motor starter											
Rated operating voltage 400 V AC, three-phase, mains voltage (50/60Hz) U_{LN} 380 (-10%) - 480 (+10%) V											
Reversing starter with selector switch REV - OFF - FWD, 2 sensor inputs											
6.6	3	3	–	0	✓	–	✓	–	–	**RAM05-W200A31-4120S1** 199080	1 unit
				0	✓	–	✓	–	✓	**RAM05-W200A31-412RS1** 199099	
				1	✓	–	✓	–	–	**RAM05-W210A31-4120S1** 199084	
				1	✓	–	✓	–	✓	**RAM05-W210A31-412RS1** 199103	
				0	✓	–	–	✓	–	**RAM05-W200A31-5120S1** 198529	
				0	✓	–	–	✓	✓	**RAM05-W200A31-512RS1** 198530	
				0	–	✓	✓	–	–	**RAM05-W200A32-4120S1** 199090	
				0	–	✓	✓	–	✓	**RAM05-W200A32-412RS1** 199109	
				1	–	✓	✓	–	–	**RAM05-W210A32-4120S1** 199094	
				1	–	✓	✓	–	✓	**RAM05-W210A32-412RS1** 199113	
				0	–	✓	–	✓	–	**RAM05-W200A32-5120S1** 199088	
				0	–	✓	–	✓	✓	**RAM05-W200A32-512RS1** 199107	
			180/207 V DC	0	✓	–	✓	–	–	**RAM05-W201A31-4120S1** 199081	
				0	✓	–	✓	–	✓	**RAM05-W201A31-412RS1** 199100	
				1	✓	–	✓	–	–	**RAM05-W211A31-4120S1** 199085	
				1	✓	–	✓	–	✓	**RAM05-W211A31-412RS1** 199104	
				0	✓	–	–	✓	–	**RAM05-W201A31-5120S1** 199079	
				0	✓	–	–	✓	✓	**RAM05-W201A31-512RS1** 199098	
				0	–	✓	✓	–	–	**RAM05-W201A32-4120S1** 199091	
				0	–	✓	✓	–	✓	**RAM05-W201A32-412RS1** 199110	
				1	–	✓	✓	–	–	**RAM05-W211A32-4120S1** 199095	
				1	–	✓	✓	–	✓	**RAM05-W211A32-412RS1** 199114	
				0	–	✓	–	✓	–	**RAM05-W201A32-5120S1** 199089	
				0	–	✓	–	✓	✓	**RAM05-W201A32-512RS1** 199108	
			230/277 V AC	0	✓	–	✓	–	–	**RAM05-W202A31-4120S1** 199082	
				0	✓	–	✓	–	✓	**RAM05-W202A31-412RS1** 199101	
				1	✓	–	✓	–	–	**RAM05-W212A31-4120S1** 199086	
				1	✓	–	✓	–	✓	**RAM05-W212A31-412RS1** 199105	

Notes

[1] 0.3 - 6.6 adjustable
[2] For normal internally and externally ventilated four-pole three-phase asynchronous motors with 1500 rpm at 50 Hz and 1800 rpm at 60 Hz
[3] At 400 V, 50 Hz, at 440 - 480 V, 60 Hz
[4] For actuation of motors with electromechanical brake
[5] Operation with external 24V DC supply
[6] Profile with 31 modules
[7] Profile with 62 modules

Rated operational current [1]	Assigned motor output [2] [3]		Control voltage external brake (50/60 Hz) [4]	Actuator output [5]	AS-Interface profile		Power supply via		Repair switch	Catalog Number Article no.	Std. pack
I_e	P	P			S-7.4 [6]	S-7.A.E [7]	HAN Q4/2 plug	HAN Q5 plug			
A	kW	HP									
RAM05 motor starter											
Rated operating voltage 400 V AC, three-phase, mains voltage (50/60Hz) U_{LN} 380 (-10%) - 480 (+10%) V											
Reversing starter with selector switch REV - OFF - FWD, 2 sensor inputs											
6.6	3	3	230/277 V AC	0	✓	–	–	✓	–	**RAM05-W202A31-5120S1** 198531	1 unit
				0	✓	–	–	✓	✓	**RAM05-W202A31-512RS1** 198532	
				1	✓	–	–	✓	–	**RAM05-W212A31-5120S1** 198539	
				0	–	✓	✓	–	–	**RAM05-W202A32-4120S1** 199092	
				0	–	✓	✓	–	✓	**RAM05-W202A32-412RS1** 199111	
				1	–	✓	✓	–	–	**RAM05-W212A32-4120S1** 199096	
				1	–	✓	✓	–	✓	**RAM05-W212A32-412RS1** 199115	
				0	–	✓	–	✓	–	**RAM05-W202A32-5120S1** 198533	
				0	–	✓	–	✓	✓	**RAM05-W202A32-512RS1** 198534	
				1	–	✓	–	✓	–	**RAM05-W212A32-5120S1** 198540	
			400/480 V AC	0	✓	–	✓	–	–	**RAM05-W204A31-4120S1** 199083	
				0	✓	–	✓	–	✓	**RAM05-W204A31-412RS1** 199102	
				1	✓	–	✓	–	–	**RAM05-W214A31-4120S1** 199087	
				1	✓	–	✓	–	✓	**RAM05-W214A31-412RS1** 199106	
				0	✓	–	–	✓	–	**RAM05-W204A31-5120S1** 198535	
				0	✓	–	–	✓	✓	**RAM05-W204A31-512RS1** 198536	
				1	✓	–	–	✓	–	**RAM05-W214A31-5120S1** 198541	
				0	–	✓	✓	–	–	**RAM05-W204A32-4120S1** 199093	
				0	–	✓	✓	–	✓	**RAM05-W204A32-412RS1** 199112	
				1	–	✓	✓	–	–	**RAM05-W214A32-4120S1** 199097	
				1	–	✓	✓	–	✓	**RAM05-W214A32-412RS1** 199116	
				0	–	✓	–	✓	–	**RAM05-W204A32-5120S1** 198537	
				0	–	✓	–	✓	✓	**RAM05-W204A32-512RS1** 198538	

Notes
[1] 0.3 - 6.6 adjustable
[2] For normal internally and externally ventilated four-pole three-phase asynchronous motors with 1500 rpm at 50 Hz and 1800 rpm at 60 Hz
[3] At 400 V, 50 Hz, at 440 - 480 V, 60 Hz
[4] For actuation of motors with electromechanical brake
[5] Operation with external 24V DC supply
[6] Profile with 31 modules
[7] Profile with 62 modules

Rated operational current [1]	Assigned motor output [2] [3]		Control voltage external brake (50/60 Hz) [4]	Power supply via		Repair switch	Internal braking resistance [5]	STO [6]	Catalog Number Article no.	Std. pack
I_e	P	P		HAN Q4/2 plug	HAN Q5 plug					
A	kW	HP								
RASP5 variable frequency drives										
Rated operating voltage 400 V AC, three-phase Mains voltage (50/60Hz) U_{LN} 380 (-10%) - 480 (+10%) V 4 sensor inputs, without actuator output, AS-Interface profile S7.4 (for 31 modules)										
2.4	0.75	1	–	✓	–	–	–	–	**RASP5-2400A31-4120000S1** 198728	1 unit
				✓	–	–	–	✓	**RASP5-2400A31-4120010S1** 198736	
				✓	–	–	–	–	**RASP5-2400A31-412R000S1** 198744	
				✓	–	–	–	✓	**RASP5-2400A31-412R010S1** 198752	
				✓	–	–	✓	–	**RASP5-2400A31-4120100S1** 198732	
				✓	–	–	✓	✓	**RASP5-2400A31-4120110S1** 198740	
				✓	–	✓	✓	–	**RASP5-2400A31-412R100S1** 198748	
				✓	–	✓	✓	✓	**RASP5-2400A31-412R110S1** 198756	
				–	✓	–	–	–	**RASP5-2400A31-5120000S1** 198542	
				–	✓	–	–	–	**RASP5-2400A31-512R000S1** 198548	
				–	✓	–	✓	–	**RASP5-2400A31-5120100S1** 198545	
				–	✓	✓	✓	–	**RASP5-2400A31-512R100S1** 198551	
			180/207 V DC	✓	–	–	–	–	**RASP5-2401A31-4120000S1** 198729	
				✓	–	–	–	✓	**RASP5-2401A31-4120010S1** 198737	
				✓	–	–	–	–	**RASP5-2401A31-412R000S1** 198745	
				✓	–	–	–	✓	**RASP5-2401A31-412R010S1** 198753	
				✓	–	–	✓	–	**RASP5-2401A31-4120100S1** 198733	
				✓	–	–	✓	✓	**RASP5-2401A31-4120110S1** 198741	
				✓	–	✓	✓	–	**RASP5-2401A31-412R100S1** 198749	
				✓	–	✓	✓	✓	**RASP5-2401A31-412R110S1** 198757	
				–	✓	–	–	–	**RASP5-2401A31-5120000S1** 198724	
				–	✓	–	–	–	**RASP5-2401A31-512R000S1** 198726	
				–	✓	–	✓	–	**RASP5-2401A31-5120100S1** 198725	
				–	✓	✓	✓	–	**RASP5-2401A31-512R100S1** 198727	
			230/277 V AC	✓	–	–	–	–	**RASP5-2402A31-4120000S1** 198730	
				✓	–	–	–	✓	**RASP5-2402A31-4120010S1** 198738	
				✓	–	–	–	–	**RASP5-2402A31-412R000S1** 198746	
				✓	–	–	–	✓	**RASP5-2402A31-412R010S1** 198754	

Notes

[1] Rated operational current at a switching frequency of 8 kHz and an ambient air temperature of +40°C
[2] For normal internally and externally ventilated four-pole three-phase asynchronous motors with 1500 rpm at 50 Hz and 1800 rpm at 60 Hz
[3] At 400 V, 50 Hz
at 440 - 480 V, 60 Hz
[4] For actuation of motors with electromechanical brake
[5] Integrated brake chopper with braking resistance for dynamic braking
[6] Corresponds to uncontrolled stopping as defined in IEC 60204-1, Stop Category 0.

Rated operational current [1]	Assigned motor output [2] [3]		Control voltage external brake (50/60 Hz) [4]	Power supply via		Repair switch	Internal braking resistance [5]	STO [6]	**Catalog Number** Article no.	Std. pack
I_e	P	P		HAN Q4/2 plug	HAN Q5 plug					
A	kW	HP								
RASP5 variable frequency drives										
Rated operating voltage 400 V AC, three-phase Mains voltage (50/60Hz) U_{LN} 380 (-10%) - 480 (+10%) V 4 sensor inputs, without actuator output, AS-Interface profile S7.4 (for 31 modules)										
2.4	0.75	1	230/277 V AC	✓	–	–	✓	–	**RASP5-2402A31-4120100S1** 198734	1 unit
				✓	–	–	✓	✓	**RASP5-2402A31-4120110S1** 198742	
				✓	–	✓	✓	–	**RASP5-2402A31-412R100S1** 198750	
				✓	–	✓	✓	✓	**RASP5-2402A31-412R110S1** 198758	
				–	✓	–	–	–	**RASP5-2402A31-5120000S1** 198543	
				–	✓	–	–	–	**RASP5-2402A31-512R000S1** 198549	
				–	✓	–	✓	–	**RASP5-2402A31-5120100S1** 198546	
				–	✓	✓	✓	–	**RASP5-2402A31-512R100S1** 198552	
			400/480 V AC	✓	–	–	–	–	**RASP5-2404A31-4120000S1** 198731	
				✓	–	–	–	✓	**RASP5-2404A31-4120010S1** 198739	
				✓	–	–	–	–	**RASP5-2404A31-412R000S1** 198747	
				✓	–	–	–	✓	**RASP5-2404A31-412R010S1** 198755	
				✓	–	–	✓	–	**RASP5-2404A31-4120100S1** 198735	
				✓	–	–	✓	✓	**RASP5-2404A31-4120110S1** 198743	
				✓	–	✓	✓	–	**RASP5-2404A31-412R100S1** 198751	
				✓	–	✓	✓	✓	**RASP5-2404A31-412R110S1** 198759	
				–	✓	–	–	–	**RASP5-2404A31-5120000S1** 198544	
				–	✓	–	–	–	**RASP5-2404A31-512R000S1** 198550	
				–	✓	–	✓	–	**RASP5-2404A31-5120100S1** 198547	
				–	✓	✓	✓	–	**RASP5-2404A31-512R100S1** 198553	
4.3	1.5	2	–	✓	–	–	–	–	**RASP5-4400A31-4120000S1** 198764	
				✓	–	–	–	✓	**RASP5-4400A31-4120010S1** 198772	
				✓	–	–	–	–	**RASP5-4400A31-412R000S1** 198780	
				✓	–	–	–	✓	**RASP5-4400A31-412R010S1** 198788	
				✓	–	–	✓	–	**RASP5-4400A31-4120100S1** 198768	
				✓	–	–	✓	✓	**RASP5-4400A31-4120110S1** 198776	
				✓	–	✓	✓	–	**RASP5-4400A31-412R100S1** 198784	
				✓	–	✓	✓	✓	**RASP5-4400A31-412R110S1** 198792	

Notes

[1] Rated operational current at a switching frequency of 8 kHz and an ambient air temperature of +40°C
[2] For normal internally and externally ventilated four-pole three-phase asynchronous motors with 1500 rpm at 50 Hz and 1800 rpm at 60 Hz
[3] At 400 V, 50 Hz
at 440 - 480 V, 60 Hz
[4] For actuation of motors with electromechanical brake
[5] Integrated brake chopper with braking resistance for dynamic braking
[6] Corresponds to uncontrolled stopping as defined in IEC 60204-1, Stop Category 0.

Rated operational current [1]	Assigned motor output [2] [3]		Control voltage external brake (50/60 Hz) [4]	Power supply via		Repair switch	Internal braking resistance [5]	STO [6]	Catalog Number Article no.	Std. pack
I_e	P	P		HAN Q4/2 plug	HAN Q5 plug					
A	kW	HP								
RASP5 variable frequency drives										
Rated operating voltage 400 V AC, three-phase Mains voltage (50/60Hz) U_{LN} 380 (-10%) - 480 (+10%) V 4 sensor inputs, without actuator output, AS-Interface profile S7.4 (for 31 modules)										
4.3	1.5	2	–	–	✓	–	–	–	**RASP5-4400A31-5120000S1** 198554	1 unit
				–	✓	–	–	–	**RASP5-4400A31-512R000S1** 198560	
				–	✓	–	✓	–	**RASP5-4400A31-5120100S1** 198557	
				–	✓	✓	✓	–	**RASP5-4400A31-512R100S1** 198563	
			180/207 V DC	✓	–	–	–	–	**RASP5-4401A31-4120000S1** 198765	
				✓	–	–	–	✓	**RASP5-4401A31-4120010S1** 198773	
				✓	–	–	–	–	**RASP5-4401A31-412R000S1** 198781	
				✓	–	–	–	✓	**RASP5-4401A31-412R010S1** 198789	
				✓	–	–	✓	–	**RASP5-4401A31-4120100S1** 198769	
				✓	–	–	✓	✓	**RASP5-4401A31-4120110S1** 198777	
				✓	–	✓	✓	–	**RASP5-4401A31-412R100S1** 198785	
				✓	–	✓	✓	✓	**RASP5-4401A31-412R110S1** 198793	
				–	✓	–	–	–	**RASP5-4401A31-5120000S1** 198760	
				–	✓	–	–	–	**RASP5-4401A31-512R000S1** 198762	
				–	✓	–	✓	–	**RASP5-4401A31-5120100S1** 198761	
				–	✓	✓	✓	–	**RASP5-4401A31-512R100S1** 198763	
			230/277 V AC	✓	–	–	–	–	**RASP5-4402A31-4120000S1** 198766	
				✓	–	–	–	✓	**RASP5-4402A31-4120010S1** 198774	
				✓	–	–	–	–	**RASP5-4402A31-412R000S1** 198782	
				✓	–	–	–	✓	**RASP5-4402A31-412R010S1** 198790	
				✓	–	–	✓	–	**RASP5-4402A31-4120100S1** 198770	
				✓	–	–	✓	✓	**RASP5-4402A31-4120110S1** 198778	
				✓	–	✓	✓	–	**RASP5-4402A31-412R100S1** 198786	
				✓	–	✓	✓	✓	**RASP5-4402A31-412R110S1** 198794	
				–	✓	–	–	–	**RASP5-4402A31-5120000S1** 198555	
				–	✓	–	–	–	**RASP5-4402A31-512R000S1** 198561	
				–	✓	–	✓	–	**RASP5-4402A31-5120100S1** 198558	
				–	✓	✓	✓	–	**RASP5-4402A31-512R100S1** 198564	

Notes

[1] Rated operational current at a switching frequency of 8 kHz and an ambient air temperature of +40°C
[2] For normal internally and externally ventilated four-pole three-phase asynchronous motors with 1500 rpm at 50 Hz and 1800 rpm at 60 Hz
[3] At 400 V, 50 Hz
at 440 - 480 V, 60 Hz
[4] For actuation of motors with electromechanical brake
[5] Integrated brake chopper with braking resistance for dynamic braking
[6] Corresponds to uncontrolled stopping as defined in IEC 60204-1, Stop Category 0.

Rated operational current [1]	Assigned motor output [2] [3]		Control voltage external brake (50/60 Hz) [4]	Power supply via		Repair switch	Internal braking resistance [5]	STO [6]	**Catalog Number** Article no.	Std. pack
I_e	P	P		HAN Q4/2 plug	HAN Q5 plug					
A	kW	HP								
RASP5 variable frequency drives										
Rated operating voltage 400 V AC, three-phase Mains voltage (50/60Hz) U_{LN} 380 (-10%) - 480 (+10%) V 4 sensor inputs, without actuator output, AS-Interface profile S7.4 (for 31 modules)										
4.3	1.5	2	400/480 V AC	✓	–	–	–	–	**RASP5-4404A31-4120000S1** 198767	1 unit
				✓	–	–	–	✓	**RASP5-4404A31-4120010S1** 198775	
				✓	–	–	–	–	**RASP5-4404A31-412R000S1** 198783	
				✓	–	–	–	✓	**RASP5-4404A31-412R010S1** 198791	
				✓	–	–	✓	–	**RASP5-4404A31-4120100S1** 198771	
				✓	–	–	✓	✓	**RASP5-4404A31-4120110S1** 198779	
				✓	–	✓	✓	–	**RASP5-4404A31-412R100S1** 198787	
				✓	–	✓	✓	✓	**RASP5-4404A31-412R110S1** 198795	
				–	✓	–	–	–	**RASP5-4404A31-5120000S1** 198556	
				–	✓	–	–	–	**RASP5-4404A31-512R000S1** 198562	
				–	✓	–	✓	–	**RASP5-4404A31-5120100S1** 198559	
				–	✓	✓	✓	–	**RASP5-4404A31-512R100S1** 198565	
5.6	2.2	3	–	✓	–	–	–	–	**RASP5-5400A31-4120000S1** 198800	
				✓	–	–	–	✓	**RASP5-5400A31-4120010S1** 198808	
				✓	–	–	–	–	**RASP5-5400A31-412R000S1** 198816	
				✓	–	–	–	✓	**RASP5-5400A31-412R010S1** 198824	
				✓	–	–	✓	–	**RASP5-5400A31-4120100S1** 198804	
				✓	–	–	✓	✓	**RASP5-5400A31-4120110S1** 198812	
				✓	–	✓	✓	–	**RASP5-5400A31-412R100S1** 198820	
				✓	–	✓	✓	✓	**RASP5-5400A31-412R110S1** 198828	
				–	✓	–	–	–	**RASP5-5400A31-5120000S1** 198566	
				–	✓	–	–	–	**RASP5-5400A31-512R000S1** 198572	
				–	✓	–	✓	–	**RASP5-5400A31-5120100S1** 198569	
				–	✓	✓	✓	–	**RASP5-5400A31-512R100S1** 198575	
			180/207 V DC	✓	–	–	–	–	**RASP5-5401A31-4120000S1** 198801	
				✓	–	–	–	✓	**RASP5-5401A31-4120010S1** 198809	
				✓	–	–	–	–	**RASP5-5401A31-412R000S1** 198817	
				✓	–	–	–	✓	**RASP5-5401A31-412R010S1** 198825	

Notes

[1] Rated operational current at a switching frequency of 8 kHz and an ambient air temperature of +40°C
[2] For normal internally and externally ventilated four-pole three-phase asynchronous motors with 1500 rpm at 50 Hz and 1800 rpm at 60 Hz
[3] At 400 V, 50 Hz
at 440 - 480 V, 60 Hz
[4] For actuation of motors with electromechanical brake
[5] Integrated brake chopper with braking resistance for dynamic braking
[6] Corresponds to uncontrolled stopping as defined in IEC 60204-1, Stop Category 0.

Rated operational current [1]	Assigned motor output [2] [3]		Control voltage external brake (50/60 Hz) [4]	Power supply via		Repair switch	Internal braking resistance [5]	STO [6]	Catalog Number Article no.	Std. pack
I_e	P	P		HAN Q4/2 plug	HAN Q5 plug					
A	kW	HP								
RASP5 variable frequency drives										
Rated operating voltage 400 V AC, three-phase Mains voltage (50/60Hz) U_{LN} 380 (-10%) - 480 (+10%) V 4 sensor inputs, without actuator output, AS-Interface profile S7.4 (for 31 modules)										
5.6	2.2	3	180/207 V DC	✓	–	–	✓	–	**RASP5-5401A31-4120100S1** 198805	1 unit
				✓	–	–	✓	✓	**RASP5-5401A31-4120110S1** 198813	
				✓	–	✓	✓	–	**RASP5-5401A31-412R100S1** 198821	
				✓	–	✓	✓	✓	**RASP5-5401A31-412R110S1** 198829	
				–	✓	–	–	–	**RASP5-5401A31-5120000S1** 198796	
				–	✓	–	–	–	**RASP5-5401A31-512R000S1** 198798	
				–	✓	–	✓	–	**RASP5-5401A31-5120100S1** 198797	
				–	✓	✓	✓	–	**RASP5-5401A31-512R100S1** 198799	
			230/277 V AC	✓	–	–	–	–	**RASP5-5402A31-4120000S1** 198802	
				✓	–	–	–	✓	**RASP5-5402A31-4120010S1** 198810	
				✓	–	–	–	–	**RASP5-5402A31-412R000S1** 198818	
				✓	–	–	–	✓	**RASP5-5402A31-412R010S1** 198826	
				✓	–	–	✓	–	**RASP5-5402A31-4120100S1** 198806	
				✓	–	–	✓	✓	**RASP5-5402A31-4120110S1** 198814	
				✓	–	✓	✓	–	**RASP5-5402A31-412R100S1** 198822	
				✓	–	✓	✓	✓	**RASP5-5402A31-412R110S1** 198830	
				–	✓	–	–	–	**RASP5-5402A31-5120000S1** 198567	
				–	✓	–	–	–	**RASP5-5402A31-512R000S1** 198573	
				–	✓	–	✓	–	**RASP5-5402A31-5120100S1** 198570	
				–	✓	✓	✓	–	**RASP5-5402A31-512R100S1** 198576	
			400/480 V AC	✓	–	–	–	–	**RASP5-5404A31-4120000S1** 198803	
				✓	–	–	–	✓	**RASP5-5404A31-4120010S1** 198811	
				✓	–	–	–	–	**RASP5-5404A31-412R000S1** 198819	
				✓	–	–	–	✓	**RASP5-5404A31-412R010S1** 198827	
				✓	–	–	✓	–	**RASP5-5404A31-4120100S1** 198807	
				✓	–	–	✓	✓	**RASP5-5404A31-4120110S1** 198815	
				✓	–	✓	✓	–	**RASP5-5404A31-412R100S1** 198823	
				✓	–	✓	✓	✓	**RASP5-5404A31-412R110S1** 198831	

Notes

[1] Rated operational current at a switching frequency of 8 kHz and an ambient air temperature of +40°C
[2] For normal internally and externally ventilated four-pole three-phase asynchronous motors with 1500 rpm at 50 Hz and 1800 rpm at 60 Hz
[3] At 400 V, 50 Hz
at 440 - 480 V, 60 Hz
[4] For actuation of motors with electromechanical brake
[5] Integrated brake chopper with braking resistance for dynamic braking
[6] Corresponds to uncontrolled stopping as defined in IEC 60204-1, Stop Category 0.

Rated operational current [1]	Assigned motor output [2] [3]		Control voltage external brake (50/60 Hz) [4]	Power supply via		Repair switch	Internal braking resistance [5]	STO [6]	Catalog Number Article no.	Std. pack
I_e	P	P		HAN Q4/2 plug	HAN Q5 plug					
A	kW	HP								
RASP5 variable frequency drives										
Rated operating voltage 400 V AC, three-phase Mains voltage (50/60Hz) U_{LN} 380 (-10%) - 480 (+10%) V 4 sensor inputs, without actuator output, AS-Interface profile S7.4 (for 31 modules)										
5.6	2.2	3	400/480 V AC	–	✓	–	–	–	**RASP5-5404A31-5120000S1** 198568	1 unit
			400/480 V AC	–	✓	–	–	–	**RASP5-5404A31-512R000S1** 198574	
			400/480 V AC	–	✓	–	✓	–	**RASP5-5404A31-5120100S1** 198571	
			400/480 V AC	–	✓	✓	✓	–	**RASP5-5404A31-512R100S1** 198577	

Notes

[1] Rated operational current at a switching frequency of 8 kHz and an ambient air temperature of +40°C
[2] For normal internally and externally ventilated four-pole three-phase asynchronous motors with 1500 rpm at 50 Hz and 1800 rpm at 60 Hz
[3] At 400 V, 50 Hz
at 440 - 480 V, 60 Hz
[4] For actuation of motors with electromechanical brake
[5] Integrated brake chopper with braking resistance for dynamic braking
[6] Corresponds to uncontrolled stopping as defined in IEC 60204-1, Stop Category 0.

Rated operational current [1]	Assigned motor output [2] [3]		Control voltage external brake (50/60 Hz) [4]	Power supply via		Repair switch	Internal braking resistance [5]	STO [6]	Catalog Number Article no.	Std. pack
I_e	P	P		HAN Q4/2 plug	HAN Q5 plug					
A	kW	HP								
RASP5 variable frequency drives										
Rated operating voltage 400 V AC, three-phase Mains voltage (50/60Hz) U_{LN} 380 (-10%) - 480 (+10%) V 4 sensor inputs, without actuator output, AS-Interface profile S7.4 (for 31 modules)										
8.5	4	5	–	✓	–	–	–	–	**RASP5-8400A31-4120001S1** 198836	1 unit
				✓	–	–	–	✓	**RASP5-8400A31-4120011S1** 198844	
				✓	–	–	–	–	**RASP5-8400A31-412R001S1** 198852	
				✓	–	–	–	✓	**RASP5-8400A31-412R011S1** 198860	
				✓	–	–	✓	–	**RASP5-8400A31-4120101S1** 198840	
				✓	–	–	✓	✓	**RASP5-8400A31-4120111S1** 198848	
				✓	–	✓	✓	–	**RASP5-8400A31-412R101S1** 198856	
				✓	–	✓	✓	✓	**RASP5-8400A31-412R111S1** 198864	
				–	✓	–	–	–	**RASP5-8400A31-5120001S1** 198578	
				–	✓	–	–	–	**RASP5-8400A31-512R001S1** 198584	
				–	✓	–	✓	–	**RASP5-8400A31-5120101S1** 198581	
				–	✓	✓	✓	–	**RASP5-8400A31-512R101S1** 198587	
			180/207 V DC	✓	–	–	–	–	**RASP5-8401A31-4120001S1** 198837	
				✓	–	–	–	✓	**RASP5-8401A31-4120011S1** 198845	
				✓	–	–	–	–	**RASP5-8401A31-412R001S1** 198853	
				✓	–	–	–	✓	**RASP5-8401A31-412R011S1** 198861	
				✓	–	–	✓	–	**RASP5-8401A31-4120101S1** 198841	
				✓	–	–	✓	✓	**RASP5-8401A31-4120111S1** 198849	
				✓	–	✓	✓	–	**RASP5-8401A31-412R101S1** 198857	
				✓	–	✓	✓	✓	**RASP5-8401A31-412R111S1** 198865	
				–	✓	–	–	–	**RASP5-8401A31-5120001S1** 198832	
				–	✓	–	–	–	**RASP5-8401A31-512R001S1** 198834	
				–	✓	–	✓	–	**RASP5-8401A31-5120101S1** 198833	
				–	✓	✓	✓	–	**RASP5-8401A31-512R101S1** 198835	
			230/277 V AC	✓	–	–	–	–	**RASP5-8402A31-4120001S1** 198838	
				✓	–	–	–	✓	**RASP5-8402A31-4120011S1** 198846	
				✓	–	–	–	–	**RASP5-8402A31-412R001S1** 198854	
				✓	–	–	–	✓	**RASP5-8402A31-412R011S1** 198862	

Notes

[1] Rated operational current at a switching frequency of 8 kHz and an ambient air temperature of +40°C
[2] For normal internally and externally ventilated four-pole three-phase asynchronous motors with 1500 rpm at 50 Hz and 1800 rpm at 60 Hz
[3] At 400 V, 50 Hz
at 440 - 480 V, 60 Hz
[4] For actuation of motors with electromechanical brake
[5] Integrated brake chopper with braking resistance for dynamic braking
[6] Corresponds to uncontrolled stopping as defined in IEC 60204-1, Stop Category 0.

Rated operational current [1]	Assigned motor output [2] [3]		Control voltage external brake (50/60 Hz) [4]	Power supply via		Repair switch	Internal braking resistance [5]	STO [6]	Catalog Number Article no.	Std. pack
I_e	P	P		HAN Q4/2 plug	HAN Q5 plug					
A	kW	HP								
RASP5 variable frequency drives										
Rated operating voltage 400 V AC, three-phase Mains voltage (50/60Hz) U_{LN} 380 (-10%) - 480 (+10%) V 4 sensor inputs, without actuator output, AS-Interface profile S7.4 (for 31 modules)										
8.5	4	5	230/277 V AC	✓	–	–	✓	–	**RASP5-8402A31-4120101S1** 198842	1 unit
				✓	–	–	✓	✓	**RASP5-8402A31-4120111S1** 198850	
				✓	–	✓	✓	–	**RASP5-8402A31-412R101S1** 198858	
				✓	–	✓	✓	✓	**RASP5-8402A31-412R111S1** 198866	
				–	✓	–	–	–	**RASP5-8402A31-5120001S1** 198579	
				–	✓	–	–	–	**RASP5-8402A31-512R001S1** 198585	
				–	✓	–	✓	–	**RASP5-8402A31-5120101S1** 198582	
				–	✓	✓	✓	–	**RASP5-8402A31-512R101S1** 198588	
			400/480 V AC	✓	–	–	–	–	**RASP5-8404A31-4120001S1** 198839	
				✓	–	–	–	✓	**RASP5-8404A31-4120011S1** 198847	
				✓	–	–	–	–	**RASP5-8404A31-412R001S1** 198855	
				✓	–	–	–	✓	**RASP5-8404A31-412R011S1** 198863	
				✓	–	–	✓	–	**RASP5-8404A31-4120101S1** 198843	
				✓	–	–	✓	✓	**RASP5-8404A31-4120111S1** 198851	
				✓	–	✓	✓	–	**RASP5-8404A31-412R101S1** 198859	
				✓	–	✓	✓	✓	**RASP5-8404A31-412R111S1** 198867	
				–	✓	–	–	–	**RASP5-8404A31-5120001S1** 198580	
				–	✓	–	–	–	**RASP5-8404A31-512R001S1** 198586	
				–	✓	–	✓	–	**RASP5-8404A31-5120101S1** 198583	
				–	✓	✓	✓	–	**RASP5-8404A31-512R101S1** 198589	

Notes

[1] Rated operational current at a switching frequency of 8 kHz and an ambient air temperature of +40°C
[2] For normal internally and externally ventilated four-pole three-phase asynchronous motors with 1500 rpm at 50 Hz and 1800 rpm at 60 Hz
[3] At 400 V, 50 Hz
at 440 - 480 V, 60 Hz
[4] For actuation of motors with electromechanical brake
[5] Integrated brake chopper with braking resistance for dynamic braking
[6] Corresponds to uncontrolled stopping as defined in IEC 60204-1, Stop Category 0.

Rated operational current [1]	Assigned motor output [2] [3]		Control voltage external brake (50/60 Hz) [4]	Power supply via		Repair switch	**Catalog Number** Article no.	Std. pack
I_e	P	P		HAN Q4/2 plug	HAN Q5 plug			
A	kW	HP						
RAMO5 motor starter								
Rated operating voltage 400 V AC, three-phase Mains voltage (50/60Hz) U_{LN} 380 (-10%) - 480 (+10%) V 4 sensor inputs, 2 sensor outputs								
DOL starter								
6.6	3	3	–	✓	–	–	**RAMO5-D420PNT-4120S1** 199125	1 unit
				✓	–	✓	**RAMO5-D420PNT-412RS1** 199129	
			180/207 V DC	✓	–	–	**RAMO5-D421PNT-4120S1** 199126	
				✓	–	✓	**RAMO5-D421PNT-412RS1** 199130	
			230/277 V AC	✓	–	–	**RAMO5-D422PNT-4120S1** 199127	
				✓	–	✓	**RAMO5-D422PNT-412RS1** 199131	
			400/480 V AC	✓	–	–	**RAMO5-D424PNT-4120S1** 199128	
				✓	–	✓	**RAMO5-D424PNT-412RS1** 199132	
Reversing starter with selector switch REV - OFF - FWD								
6.6	3	3	–	✓	–	–	**RAMO5-W420PNT-4120S1** 199133	1 unit
				✓	–	✓	**RAMO5-W420PNT-412RS1** 199137	
			180/207 V DC	✓	–	–	**RAMO5-W421PNT-4120S1** 199134	
				✓	–	✓	**RAMO5-W421PNT-412RS1** 199138	
			230/277 V AC	✓	–	–	**RAMO5-W422PNT-4120S1** 199135	
				✓	–	✓	**RAMO5-W422PNT-412RS1** 199139	
			400/480 V AC	✓	–	–	**RAMO5-W424PNT-4120S1** 199136	
				✓	–	✓	**RAMO5-W424PNT-412RS1** 199140	

Notes

[1] 0.3 - 6.6 adjustable
[2] For normal internally and externally ventilated four-pole three-phase asynchronous motors with 1500 rpm at 50 Hz and 1800 rpm at 60 Hz
[3] At 400 V, 50 Hz
at 440 - 480 V, 60 Hz
[4] For actuation of motors with electromechanical brake
[5] Operation with external 24V DC supply

Rated operational current [1]	Assigned motor output [2] [3]		Control voltage external brake (50/60 Hz) [4]	Power supply via		Repair switch	Internal braking resistance [5]	STO [6]	Catalog Number Article no.	Std. pack
I_e	P	P		HAN Q4/2 plug	HAN Q5 plug					
A	kW	HP								
RASP5 variable frequency drives										
Rated operating voltage 400 V AC, three-phase Mains voltage (50/60Hz) ULN 380 (-10%) - 480 (+10%) V 4 sensor inputs, 2 sensor outputs										
2.4	0.75	1	–	✓	–	–	–	–	**RASP5-2420PNT-4120000S1** 198932	1 unit
				✓	–	–	–	✓	**RASP5-2420PNT-4120010S1** 198940	
				✓	–	–	–	–	**RASP5-2420PNT-412R000S1** 198948	
				✓	–	–	–	✓	**RASP5-2420PNT-412R010S1** 198956	
				✓	–	–	✓	–	**RASP5-2420PNT-4120100S1** 198936	
				✓	–	–	✓	✓	**RASP5-2420PNT-4120110S1** 198944	
				✓	–	✓	✓	–	**RASP5-2420PNT-412R100S1** 198952	
				✓	–	✓	✓	✓	**RASP5-2420PNT-412R110S1** 198960	
			180/207 V DC	✓	–	–	–	–	**RASP5-2421PNT-4120000S1** 198933	
				✓	–	–	–	✓	**RASP5-2421PNT-4120010S1** 198941	
				✓	–	–	–	–	**RASP5-2421PNT-412R000S1** 198949	
				✓	–	–	–	✓	**RASP5-2421PNT-412R010S1** 198957	
				✓	–	–	✓	–	**RASP5-2421PNT-4120100S1** 198937	
				✓	–	–	✓	✓	**RASP5-2421PNT-4120110S1** 198945	
				✓	–	✓	✓	–	**RASP5-2421PNT-412R100S1** 198953	
				✓	–	✓	✓	✓	**RASP5-2421PNT-412R110S1** 198961	
			230/277 V AC	✓	–	–	–	–	**RASP5-2422PNT-4120000S1** 198934	
				✓	–	–	–	✓	**RASP5-2422PNT-4120010S1** 198942	
				✓	–	–	–	–	**RASP5-2422PNT-412R000S1** 198950	
				✓	–	–	–	✓	**RASP5-2422PNT-412R010S1** 198958	
				✓	–	–	✓	–	**RASP5-2422PNT-4120100S1** 198938	
				✓	–	–	✓	✓	**RASP5-2422PNT-4120110S1** 198946	
				✓	–	✓	✓	–	**RASP5-2422PNT-412R100S1** 198954	
				✓	–	✓	✓	✓	**RASP5-2422PNT-412R110S1** 198962	
			400/480 V AC	✓	–	–	–	–	**RASP5-2424PNT-4120000S1** 198935	
				✓	–	–	–	✓	**RASP5-2424PNT-4120010S1** 198943	
				✓	–	–	–	–	**RASP5-2424PNT-412R000S1** 198951	
				✓	–	–	–	✓	**RASP5-2424PNT-412R010S1** 198959	

Notes

[1] Rated operational current at a switching frequency of 8 kHz and an ambient air temperature of +40°C
[2] For normal internally and externally ventilated four-pole three-phase asynchronous motors with 1500 rpm at 50 Hz and 1800 rpm at 60 Hz
[3] At 400 V, 50 Hz
at 440 - 480 V, 60 Hz
[4] For actuation of motors with electromechanical brake
[5] Integrated brake chopper with braking resistance for dynamic braking
[6] Corresponds to uncontrolled stopping as defined in IEC 60204-1, Stop Category 0.

Rated operational current [1]	Assigned motor output [2] [3]		Control voltage external brake (50/60 Hz) [4]	Power supply via		Repair switch	Internal braking resistance [5]	STO [6]	Catalog Number Article no.	Std. pack
I_e	P	P		HAN Q4/2 plug	HAN Q5 plug					
A	kW	HP								
RASP5 variable frequency drives										
Rated operating voltage 400 V AC, three-phase Mains voltage (50/60Hz) ULN 380 (-10%) - 480 (+10%) V 4 sensor inputs, 2 sensor outputs										
2.4	0.75	1	400/480 V AC	✓	–	–	✓	–	**RASP5-2424PNT-4120100S1** 198939	1 unit
				✓	–	–	✓	✓	**RASP5-2424PNT-4120110S1** 198947	
				✓	–	✓	✓	–	**RASP5-2424PNT-412R100S1** 198955	
				✓	–	✓	✓	✓	**RASP5-2424PNT-412R110S1** 198963	
4.3	1.5	2	–	✓	–	–	–	–	**RASP5-4420PNT-4120000S1** 198964	
				✓	–	–	–	✓	**RASP5-4420PNT-4120010S1** 198972	
				✓	–	–	–	–	**RASP5-4420PNT-412R000S1** 198980	
				✓	–	–	–	✓	**RASP5-4420PNT-412R010S1** 198988	
				✓	–	–	✓	–	**RASP5-4420PNT-4120100S1** 198968	
				✓	–	–	✓	✓	**RASP5-4420PNT-4120110S1** 198976	
				✓	–	✓	✓	–	**RASP5-4420PNT-412R100S1** 198984	
				✓	–	✓	✓	✓	**RASP5-4420PNT-412R110S1** 198992	
			180/207 V DC	✓	–	–	–	–	**RASP5-4421PNT-4120000S1** 198965	
				✓	–	–	–	✓	**RASP5-4421PNT-4120010S1** 198973	
				✓	–	–	–	–	**RASP5-4421PNT-412R000S1** 198981	
				✓	–	–	–	✓	**RASP5-4421PNT-412R010S1** 198989	
				✓	–	–	✓	–	**RASP5-4421PNT-4120100S1** 198969	
				✓	–	–	✓	✓	**RASP5-4421PNT-4120110S1** 198977	
				✓	–	✓	✓	–	**RASP5-4421PNT-412R100S1** 198985	
				✓	–	✓	✓	✓	**RASP5-4421PNT-412R110S1** 198993	
			230/277 V AC	✓	–	–	–	–	**RASP5-4422PNT-4120000S1** 198966	
				✓	–	–	–	✓	**RASP5-4422PNT-4120010S1** 198974	
				✓	–	–	–	–	**RASP5-4422PNT-412R000S1** 198982	
				✓	–	–	–	✓	**RASP5-4422PNT-412R010S1** 198990	
				✓	–	–	✓	–	**RASP5-4422PNT-4120100S1** 198970	
				✓	–	–	✓	✓	**RASP5-4422PNT-4120110S1** 198978	
				✓	–	✓	✓	–	**RASP5-4422PNT-412R100S1** 198986	
				✓	–	✓	✓	✓	**RASP5-4422PNT-412R110S1** 198994	

Notes

[1] Rated operational current at a switching frequency of 8 kHz and an ambient air temperature of +40°C
[2] For normal internally and externally ventilated four-pole three-phase asynchronous motors with 1500 rpm at 50 Hz and 1800 rpm at 60 Hz
[3] At 400 V, 50 Hz
at 440 - 480 V, 60 Hz
[4] For actuation of motors with electromechanical brake
[5] Integrated brake chopper with braking resistance for dynamic braking
[6] Corresponds to uncontrolled stopping as defined in IEC 60204-1, Stop Category 0.

Rated operational current [1]	Assigned motor output [2] [3]		Control voltage external brake (50/60 Hz) [4]	Power supply via		Repair switch	Internal braking resistance [5]	STO [6]	Catalog Number Article no.	Std. pack
I_e	P	P		HAN Q4/2 plug	HAN Q5 plug					
A	kW	HP								
RASP5 variable frequency drives										
Rated operating voltage 400 V AC, three-phase Mains voltage (50/60Hz) ULN 380 (-10%) - 480 (+10%) V 4 sensor inputs, 2 sensor outputs										
4.3	1.5	2	400/480 V AC	✓	–	–	–	–	**RASP5-4424PNT-4120000S1** 198967	1 unit
				✓	–	–	–	✓	**RASP5-4424PNT-4120010S1** 198975	
				✓	–	–	–	–	**RASP5-4424PNT-412R000S1** 198983	
				✓	–	–	–	✓	**RASP5-4424PNT-412R010S1** 198991	
				✓	–	–	✓	–	**RASP5-4424PNT-4120100S1** 198971	
				✓	–	–	✓	✓	**RASP5-4424PNT-4120110S1** 198979	
				✓	–	✓	✓	–	**RASP5-4424PNT-412R100S1** 198987	
				✓	–	✓	✓	✓	**RASP5-4424PNT-412R110S1** 198995	
5.6	2.2	3	–	✓	–	–	–	–	**RASP5-5420PNT-4120000S1** 198996	
				✓	–	–	–	✓	**RASP5-5420PNT-4120010S1** 199004	
				✓	–	–	–	–	**RASP5-5420PNT-412R000S1** 199012	
				✓	–	–	–	✓	**RASP5-5420PNT-412R010S1** 199020	
				✓	–	–	✓	–	**RASP5-5420PNT-4120100S1** 199000	
				✓	–	–	✓	✓	**RASP5-5420PNT-4120110S1** 199008	
				✓	–	✓	✓	–	**RASP5-5420PNT-412R100S1** 199016	
				✓	–	✓	✓	✓	**RASP5-5420PNT-412R110S1** 199024	
			180/207 V DC	✓	–	–	–	–	**RASP5-5421PNT-4120000S1** 198997	
				✓	–	–	–	✓	**RASP5-5421PNT-4120010S1** 199005	
				✓	–	–	–	–	**RASP5-5421PNT-412R000S1** 199013	
				✓	–	–	–	✓	**RASP5-5421PNT-412R010S1** 199021	
				✓	–	–	✓	–	**RASP5-5421PNT-4120100S1** 199001	
				✓	–	–	✓	✓	**RASP5-5421PNT-4120110S1** 199009	
				✓	–	✓	✓	–	**RASP5-5421PNT-412R100S1** 199017	
				✓	–	✓	✓	✓	**RASP5-5421PNT-412R110S1** 199025	
			230/277 V AC	✓	–	–	–	–	**RASP5-5422PNT-4120000S1** 198998	
				✓	–	–	–	✓	**RASP5-5422PNT-4120010S1** 199006	
				✓	–	–	–	–	**RASP5-5422PNT-412R000S1** 199014	
				✓	–	–	–	✓	**RASP5-5422PNT-412R010S1** 199022	

Notes

[1] Rated operational current at a switching frequency of 8 kHz and an ambient air temperature of +40°C
[2] For normal internally and externally ventilated four-pole three-phase asynchronous motors with 1500 rpm at 50 Hz and 1800 rpm at 60 Hz
[3] At 400 V, 50 Hz
at 440 - 480 V, 60 Hz
[4] For actuation of motors with electromechanical brake
[5] Integrated brake chopper with braking resistance for dynamic braking
[6] Corresponds to uncontrolled stopping as defined in IEC 60204-1, Stop Category 0.

Rated operational current [1]	Assigned motor output [2] [3]		Control voltage external brake (50/60 Hz) [4]	Power supply via		Repair switch	Internal braking resistance [5]	STO [6]	Catalog Number Article no.	Std. pack
I_e	P	P		HAN Q4/2 plug	HAN Q5 plug					
A	kW	HP								
RASP5 variable frequency drives										
Rated operating voltage 400 V AC, three-phase Mains voltage (50/60Hz) ULN 380 (-10%) - 480 (+10%) V 4 sensor inputs, 2 sensor outputs										
5.6	2.2	3	230/277 V AC	✓	–	–	✓	–	**RASP5-5422PNT-4120100S1** 199002	1 unit
				✓	–	–	✓	✓	**RASP5-5422PNT-4120110S1** 199010	
				✓	–	✓	✓	–	**RASP5-5422PNT-412R100S1** 199018	
				✓	–	✓	✓	✓	**RASP5-5422PNT-412R110S1** 199026	
			400/480 V AC	✓	–	–	–	–	**RASP5-5424PNT-4120000S1** 198999	
				✓	–	–	–	✓	**RASP5-5424PNT-4120010S1** 199007	
				✓	–	–	–	–	**RASP5-5424PNT-412R000S1** 199015	
				✓	–	–	–	✓	**RASP5-5424PNT-412R010S1** 199023	
				✓	–	–	✓	–	**RASP5-5424PNT-4120100S1** 199003	
				✓	–	–	✓	✓	**RASP5-5424PNT-4120110S1** 199011	
				✓	–	✓	✓	–	**RASP5-5424PNT-412R100S1** 199019	
				✓	–	✓	✓	✓	**RASP5-5424PNT-412R110S1** 199027	

Notes

[1] Rated operational current at a switching frequency of 8 kHz and an ambient air temperature of +40°C
[2] For normal internally and externally ventilated four-pole three-phase asynchronous motors with 1500 rpm at 50 Hz and 1800 rpm at 60 Hz
[3] At 400 V, 50 Hz
at 440 - 480 V, 60 Hz
[4] For actuation of motors with electromechanical brake
[5] Integrated brake chopper with braking resistance for dynamic braking
[6] Corresponds to uncontrolled stopping as defined in IEC 60204-1, Stop Category 0.

Rated operational current [1]	Assigned motor output [2] [3]		Control voltage external brake (50/60 Hz) [4]	Power supply via		Repair switch	Internal braking resistance [5]	STO [6]	Catalog Number Article no.	Std. pack
I_e	P	P		HAN Q4/2 plug	HAN Q5 plug					
A	kW	HP								
RASP5 variable frequency drives										
Rated operating voltage 400 V AC, three-phase Mains voltage (50/60Hz) ULN 380 (-10%) - 480 (+10%) V 4 sensor inputs, 2 sensor outputs										
8.5	4	5	–	✓	–	–	–	–	**RASP5-8420PNT-4120001S1** 199028	1 unit
				✓	–	–	–	✓	**RASP5-8420PNT-4120011S1** 199036	
				✓	–	–	–	–	**RASP5-8420PNT-412R001S1** 199044	
				✓	–	–	–	✓	**RASP5-8420PNT-412R011S1** 199052	
				✓	–	–	✓	–	**RASP5-8420PNT-4120101S1** 199032	
				✓	–	–	✓	✓	**RASP5-8420PNT-4120111S1** 199040	
				✓	–	✓	✓	–	**RASP5-8420PNT-412R101S1** 199048	
				✓	–	✓	✓	✓	**RASP5-8420PNT-412R111S1** 199056	
			180/207 V DC	✓	–	–	–	–	**RASP5-8421PNT-4120001S1** 199029	
				✓	–	–	–	✓	**RASP5-8421PNT-4120011S1** 199037	
				✓	–	–	–	–	**RASP5-8421PNT-412R001S1** 199045	
				✓	–	–	–	✓	**RASP5-8421PNT-412R011S1** 199053	
				✓	–	–	✓	–	**RASP5-8421PNT-4120101S1** 199033	
				✓	–	–	✓	✓	**RASP5-8421PNT-4120111S1** 199041	
				✓	–	✓	✓	–	**RASP5-8421PNT-412R101S1** 199049	
				✓	–	✓	✓	✓	**RASP5-8421PNT-412R111S1** 199057	
			230/277 V AC	✓	–	–	–	–	**RASP5-8422PNT-4120001S1** 199030	
				✓	–	–	–	✓	**RASP5-8422PNT-4120011S1** 199038	
				✓	–	–	–	–	**RASP5-8422PNT-412R001S1** 199046	
				✓	–	–	–	✓	**RASP5-8422PNT-412R011S1** 199054	
				✓	–	–	✓	–	**RASP5-8422PNT-4120101S1** 199034	
				✓	–	–	✓	✓	**RASP5-8422PNT-4120111S1** 199042	
				✓	–	✓	✓	–	**RASP5-8422PNT-412R101S1** 199050	
				✓	–	✓	✓	✓	**RASP5-8422PNT-412R111S1** 199058	
			400/480 V AC	✓	–	–	–	–	**RASP5-8424PNT-4120001S1** 199031	
				✓	–	–	–	✓	**RASP5-8424PNT-4120011S1** 199039	
				✓	–	–	–	–	**RASP5-8424PNT-412R001S1** 199047	
				✓	–	–	–	✓	**RASP5-8424PNT-412R011S1** 199055	

Notes

[1] Rated operational current at a switching frequency of 8 kHz and an ambient air temperature of +40°C
[2] For normal internally and externally ventilated four-pole three-phase asynchronous motors with 1500 rpm at 50 Hz and 1800 rpm at 60 Hz
[3] At 400 V, 50 Hz
at 440 - 480 V, 60 Hz
[4] For actuation of motors with electromechanical brake
[5] Integrated brake chopper with braking resistance for dynamic braking
[6] Corresponds to uncontrolled stopping as defined in IEC 60204-1, Stop Category 0.

Rated operational current [1]	Assigned motor output [2] [3]		Control voltage external brake (50/60 Hz) [4]	Power supply via		Repair switch	Internal braking resistance [5]	STO [6]	Catalog Number Article no.	Std. pack
I_e	P	P		HAN Q4/2 plug	HAN Q5 plug					
A	kW	HP								
RASP5 variable frequency drives										
Rated operating voltage 400 V AC, three-phase Mains voltage (50/60Hz) ULN 380 (-10%) - 480 (+10%) V 4 sensor inputs, 2 sensor outputs										
8.5	4	5	400/480 V AC	✓	–	–	✓	–	**RASP5-8424PNT-4120101S1** 199035	1 unit
				✓	–	–	✓	✓	**RASP5-8424PNT-4120111S1** 199043	
				✓	–	✓	✓	–	**RASP5-8424PNT-412R101S1** 199051	
				✓	–	✓	✓	✓	**RASP5-8424PNT-412R111S1** 199059	

Notes

[1] Rated operational current at a switching frequency of 8 kHz and an ambient air temperature of +40°C
[2] For normal internally and externally ventilated four-pole three-phase asynchronous motors with 1500 rpm at 50 Hz and 1800 rpm at 60 Hz
[3] At 400 V, 50 Hz
at 440 - 480 V, 60 Hz
[4] For actuation of motors with electromechanical brake
[5] Integrated brake chopper with braking resistance for dynamic braking
[6] Corresponds to uncontrolled stopping as defined in IEC 60204-1, Stop Category 0.

Rated operational current [1]	Assigned motor output [2] [3]		Control voltage external brake (50/60 Hz) [4]	Power supply via		Repair switch	**Catalog Number** Article no.	Std. pack
I_e	P	P		HAN Q4/2 plug	HAN Q5 plug			
A	kW	HP						
RAMO5 motor starter								
Rated operating voltage 400 V AC, three-phase Mains voltage (50/60Hz) U_{LN} 380 (-10%) - 480 (+10%) V 4 sensor inputs, 2 sensor outputs								
DOL starter								
6.6	3	3	–	✓	–	✓	**RAMO5-D420EIP-412RS1** 199117	1 unit
			180/207 V DC	✓	–	✓	**RAMO5-D421EIP-412RS1** 199118	
			230/277 V AC	✓	–	✓	**RAMO5-D422EIP-412RS1** 199119	
			400/480 V AC	✓	–	✓	**RAMO5-D424EIP-412RS1** 199120	
Reversing starter with selector switch REV - OFF - FWD								
6.6	3	3	–	✓	–	✓	**RAMO5-W420EIP-412RS1** 199121	1 unit
			180/207 V DC	✓	–	✓	**RAMO5-W421EIP-412RS1** 199122	
			230/277 V AC	✓	–	✓	**RAMO5-W422EIP-412RS1** 199123	
			400/480 V AC	✓	–	✓	**RAMO5-W424EIP-412RS1** 199124	

Notes

[1] 0.3 - 6.6 adjustable
[2] For normal internally and externally ventilated four-pole three-phase asynchronous motors with 1500 rpm at 50 Hz and 1800 rpm at 60 Hz
[3] At 400 V, 50 Hz
at 440 - 480 V, 60 Hz
[4] For actuation of motors with electromechanical brake
[5] Operation with external 24V DC supply

Rated operational current [1]	Assigned motor output [2] [3]		Control voltage external brake (50/60 Hz) [4]	Power supply via		Repair switch	Internal braking resistance [5]	STO [6]	**Catalog Number** Article no.	Std. pack
I_e	P	P		HAN Q4/2 plug	HAN Q5 plug					
A	kW	HP								
RASP5 variable frequency drives										
Rated operating voltage 400 V AC, three-phase Mains voltage (50/60Hz) U_{LN} 380 (-10%) - 480 (+10%) V 4 sensor inputs, 2 sensor outputs										
2.4	0.75	1	–	✓	–	–	–	–	**RASP5-2420EIP-412R000S1** 198868	1 unit
				✓	–	–	–	✓	**RASP5-2420EIP-412R010S1** 198876	
				✓	–	✓	✓	–	**RASP5-2420EIP-412R100S1** 198872	
				✓	–	✓	✓	✓	**RASP5-2420EIP-412R110S1** 198880	
			180/207 V DC	✓	–	–	–	–	**RASP5-2421EIP-412R000S1** 198869	
				✓	–	–	–	✓	**RASP5-2421EIP-412R010S1** 198877	
				✓	–	✓	✓	–	**RASP5-2421EIP-412R100S1** 198873	
				✓	–	✓	✓	✓	**RASP5-2421EIP-412R110S1** 198881	
			230/277 V AC	✓	–	–	–	–	**RASP5-2422EIP-412R000S1** 198870	
				✓	–	–	–	✓	**RASP5-2422EIP-412R010S1** 198878	
				✓	–	✓	✓	–	**RASP5-2422EIP-412R100S1** 198874	
				✓	–	✓	✓	✓	**RASP5-2422EIP-412R110S1** 198882	
			400/480 V AC	✓	–	–	–	–	**RASP5-2424EIP-412R000S1** 198871	
				✓	–	–	–	✓	**RASP5-2424EIP-412R010S1** 198879	
				✓	–	✓	✓	–	**RASP5-2424EIP-412R100S1** 198875	
				✓	–	✓	✓	✓	**RASP5-2424EIP-412R110S1** 198883	
4.3	1.5	2	–	✓	–	–	–	–	**RASP5-4420EIP-412R000S1** 198884	
				✓	–	–	–	✓	**RASP5-4420EIP-412R010S1** 198892	
				✓	–	✓	✓	–	**RASP5-4420EIP-412R100S1** 198888	
				✓	–	✓	✓	✓	**RASP5-4420EIP-412R110S1** 198896	
			180/207 V DC	✓	–	–	–	–	**RASP5-4421EIP-412R000S1** 198885	
				✓	–	–	–	✓	**RASP5-4421EIP-412R010S1** 198893	
				✓	–	✓	✓	–	**RASP5-4421EIP-412R100S1** 198889	
				✓	–	✓	✓	✓	**RASP5-4421EIP-412R110S1** 198897	
			230/277 V AC	✓	–	–	–	–	**RASP5-4422EIP-412R000S1** 198886	
				✓	–	–	–	✓	**RASP5-4422EIP-412R010S1** 198894	
				✓	–	✓	✓	–	**RASP5-4422EIP-412R100S1** 198890	

Notes

[1] Rated operational current at a switching frequency of 8 kHz and an ambient air temperature of +40°C
[2] For normal internally and externally ventilated four-pole three-phase asynchronous motors with 1500 rpm at 50 Hz and 1800 rpm at 60 Hz
[3] At 400 V, 50 Hz
at 440 - 480 V, 60 Hz
[4] For actuation of motors with electromechanical brake
[5] Integrated brake chopper with braking resistance for dynamic braking
[6] Corresponds to uncontrolled stopping as defined in IEC 60204-1, Stop Category 0.

Rapid Link 5 decentralized, electronic drive system

Ethernet/IP

Rated operational current [1]	Assigned motor output [2] [3]		Control voltage external brake (50/60 Hz) [4]	Power supply via		Repair switch	Internal braking resistance [5]	STO [6]	Catalog Number Article no.	Std. pack
I_e	P	P		HAN Q4/2 plug	HAN Q5 plug					
A	kW	HP								
RASP5 variable frequency drives										
Rated operating voltage 400 V AC, three-phase Mains voltage (50/60Hz) U_{LN} 380 (-10%) - 480 (+10%) V 4 sensor inputs, 2 sensor outputs										
4.3	1.5	2	230/277 V AC	✓	–	✓	✓	✓	**RASP5-4422EIP-412R110S1** 198898	1 unit
			400/480 V AC	✓	–	–	–	–	**RASP5-4424EIP-412R000S1** 198887	
				✓	–	–	–	✓	**RASP5-4424EIP-412R010S1** 198895	
				✓	–	✓	✓	–	**RASP5-4424EIP-412R100S1** 198891	
				✓	–	✓	✓	✓	**RASP5-4424EIP-412R110S1** 198899	
5.6	2.2	3	–	✓	–	–	–	–	**RASP5-5420EIP-412R000S1** 198900	
				✓	–	–	–	✓	**RASP5-5420EIP-412R010S1** 198908	
				✓	–	✓	✓	–	**RASP5-5420EIP-412R100S1** 198904	
				✓	–	✓	✓	✓	**RASP5-5420EIP-412R110S1** 198912	
			180/207 V DC	✓	–	–	–	–	**RASP5-5421EIP-412R000S1** 198901	
				✓	–	–	–	✓	**RASP5-5421EIP-412R010S1** 198909	
				✓	–	✓	✓	–	**RASP5-5421EIP-412R100S1** 198905	
				✓	–	✓	✓	✓	**RASP5-5421EIP-412R110S1** 198913	
			230/277 V AC	✓	–	–	–	–	**RASP5-5422EIP-412R000S1** 198902	
				✓	–	–	–	✓	**RASP5-5422EIP-412R010S1** 198910	
				✓	–	✓	✓	–	**RASP5-5422EIP-412R100S1** 198906	
				✓	–	✓	✓	✓	**RASP5-5422EIP-412R110S1** 198914	
			400/480 V AC	✓	–	–	–	–	**RASP5-5424EIP-412R000S1** 198903	
				✓	–	–	–	✓	**RASP5-5424EIP-412R010S1** 198911	
				✓	–	✓	✓	–	**RASP5-5424EIP-412R100S1** 198907	
				✓	–	✓	✓	✓	**RASP5-5424EIP-412R110S1** 198915	

Notes

[1] Rated operational current at a switching frequency of 8 kHz and an ambient air temperature of +40°C
[2] For normal internally and externally ventilated four-pole three-phase asynchronous motors with 1500 rpm at 50 Hz and 1800 rpm at 60 Hz
[3] At 400 V, 50 Hz
At 440 - 480 V, 60 Hz
[4] For actuation of motors with electromechanical brake
[5] Integrated brake chopper with braking resistance for dynamic braking
[6] Corresponds to uncontrolled stopping as defined in IEC 60204-1, Stop Category 0.

Rated operational current [1]	Assigned motor output [2] [3]		Control voltage external brake (50/60 Hz) [4]	Power supply via		Repair switch	Internal braking resistance [5]	STO [6]	Catalog Number Article no.	Std. pack
I_e	P	P		HAN Q4/2 plug	HAN Q5 plug					
A	kW	HP								
RASP5 variable frequency drives										
Rated operating voltage 400 V AC, three-phase Mains voltage (50/60Hz) U_{LN} 380 (-10%) - 480 (+10%) V 4 sensor inputs, 2 sensor outputs										
8.5	4	5	–	✓	–	–	–	–	**RASP5-8420EIP-412R001S1** 198916	1 unit
				✓	–	–	–	✓	**RASP5-8420EIP-412R011S1** 198924	
				✓	–	✓	✓	–	**RASP5-8420EIP-412R101S1** 198920	
				✓	–	✓	✓	✓	**RASP5-8420EIP-412R111S1** 198928	
			180/207 V DC	✓	–	–	–	–	**RASP5-8421EIP-412R001S1** 198917	
				✓	–	–	–	✓	**RASP5-8421EIP-412R011S1** 198925	
				✓	–	✓	✓	–	**RASP5-8421EIP-412R101S1** 198921	
				✓	–	✓	✓	✓	**RASP5-8421EIP-412R111S1** 198929	
			230/277 V AC	✓	–	–	–	–	**RASP5-8422EIP-412R001S1** 198918	
				✓	–	–	–	✓	**RASP5-8422EIP-412R011S1** 198926	
				✓	–	✓	✓	–	**RASP5-8422EIP-412R101S1** 198922	
				✓	–	✓	✓	✓	**RASP5-8422EIP-412R111S1** 198930	
			400/480 V AC	✓	–	–	–	–	**RASP5-8424EIP-412R001S1** 198919	
				✓	–	–	–	✓	**RASP5-8424EIP-412R011S1** 198927	
				✓	–	✓	✓	–	**RASP5-8424EIP-412R101S1** 198923	
				✓	–	✓	✓	✓	**RASP5-8424EIP-412R111S1** 198931	

Notes

[1] Rated operational current at a switching frequency of 8 kHz and an ambient air temperature of +40°C
[2] For normal internally and externally ventilated four-pole three-phase asynchronous motors with 1500 rpm at 50 Hz and 1800 rpm at 60 Hz
[3] At 400 V, 50 Hz
at 440 - 480 V, 60 Hz
[4] For actuation of motors with electromechanical brake
[5] Integrated brake chopper with braking resistance for dynamic braking
[6] Corresponds to uncontrolled stopping as defined in IEC 60204-1, Stop Category 0.

Rapid Link 5 decentralized, electronic drive system

Accessory

	Description	Length m	For use with	Catalog Number Article no.	Std. pack
	**External keypad**				
	With multi-language plain text OLED display Front IP54 With approx. 3 m-long, plug-in connection cable (RJ45, 8-pin)	3	DC1, DB1, DA1, RAMO5, RASP5	**DX-KEY-OLED** 169133	1 unit
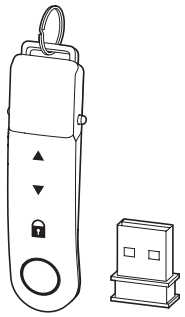	**Parameter assignment**				
	Parameter storage unit and Bluetooth communication stick				
	For storage, copying parameters, and/or transferring parameters to a PC or smartphone (iOS or Android) via Bluetooth with the drivesConnect software or the drivesConnect mobile app respectively With 2 function keys for uploading and downloading parameters with parameter memory.	–	DE1, DE11, DC1, DB1, DA1, RAMO5, RASP5	**DX-COM-STICK3-KIT** 197586	1 unit
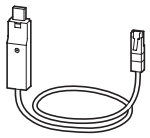	**Programming cable**				
	Interface converter USB/RS485 with connection cable, RJ45 8 pole For storage, copying parameters, and/or transferring parameters to a PC with the drivesConnect software, electrically isolated	3	DE1, DE11, DC1, DB1, DA1	**DX-CBL-PC-3M0** 744-A3036-00P	1 unit
	Mains connection				
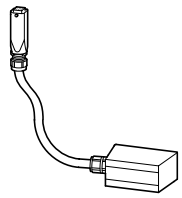	Power connection cable: For connecting the device to a flat cable outlet from the Wieland podis CON 7G4 system				
	halogen-free, 5 x 1.5 mm^2, with power plug Han Q5 and plug for flexible busbar junction FCS 4 7 SI BU SW Article no. 75.015.5153.1	1.5	RAMO5, RASP5	**RA-C3/C1-1.5HF** 290210	1 unit
	halogen-free, 5 x 1.5 mm^2, with power plug Han Q4/2 and plug for flexible busbar junction FCS 4 7 SI BU SW Article no. 75.015.5153.1	1.5	RAMO5, RASP5	**RA-Q4/C1-1M5** 198283	
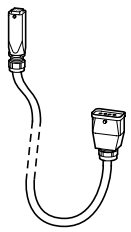	Power connection cable For connecting the device to a Harting Han-Power S energy distributor				
	halogen-free, 5 x 1.5 mm^2, with power plug Han Q5 and plug for Han-Power S 1 x Han Q8 Article no. 09 12 008 4801	1.5	RAMO5, RASP5	**RA-C3/C2-1.5HF** 290211	1 unit
	halogen-free, 5 x 1.5 mm^2, with power plug Han Q4/2 and plug for Han-Power S 1 x Han Q8 Article no. 09 12 008 4801	1.5	RAMO5, RASP5	**RA-Q4/C2-1M5** 198284	
	Motor feeder				
	Motor cable For connecting the motor starter / variable frequency drive to a motor				
	halogen-free, 8 x 1.5 mm^2 With plastic Han Q8 plug and unterminated cable end	2	RAMO5	**RAMO-CM1-2M0** 164282	1 unit
		5	RAMO5	**RAMO-CM1-5M0** 164283	
		10	RAMO5	**RAMO-CM1-10M** 164284	
	halogen-free, screened, 4 x 1.5 mm^2 + 2 x (2 x 0.75 mm^2) With metal Han Q8 plug and unterminated cable end	2	RASP5	**RASP-CM2-2M0** 198280	1 unit
		5	RASP5	**RASP-CM2-5M0** 198281	
		10	RASP5	**RASP-CM2-10M** 198282	

Engineering

RAMO5 with AS-Interface

RAMO5-D...

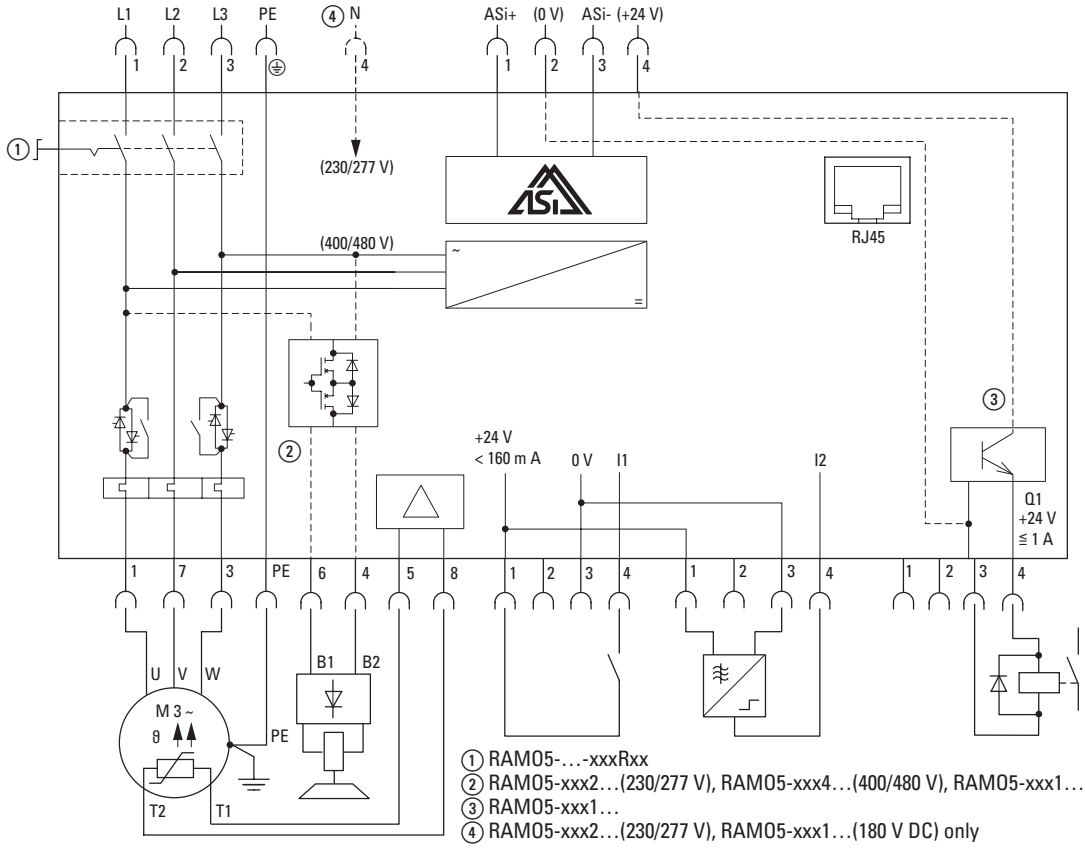

① RAMO5-…-xxxRxx
② RAMO5-xxx2…(230/277 V), RAMO5-xxx4…(400/480 V), RAMO5-xxx1…(180 V DC)
③ RAMO5-xxx1…
④ RAMO5-xxx2…(230/277 V), RAMO5-xxx1…(180 V DC) only

RAMO5-W...

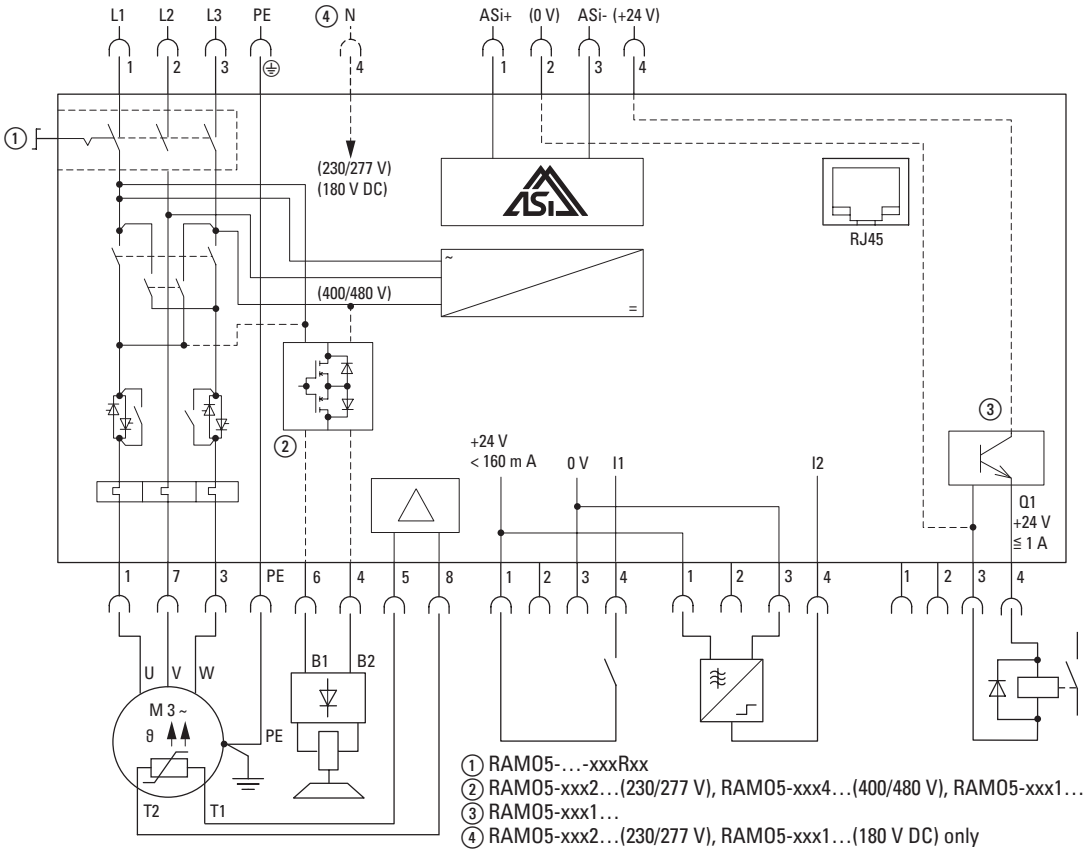

① RAMO5-…-xxxRxx
② RAMO5-xxx2…(230/277 V), RAMO5-xxx4…(400/480 V), RAMO5-xxx1…(180 V DC)
③ RAMO5-xxx1…
④ RAMO5-xxx2…(230/277 V), RAMO5-xxx1…(180 V DC) only

RASP5 with AS-Interface

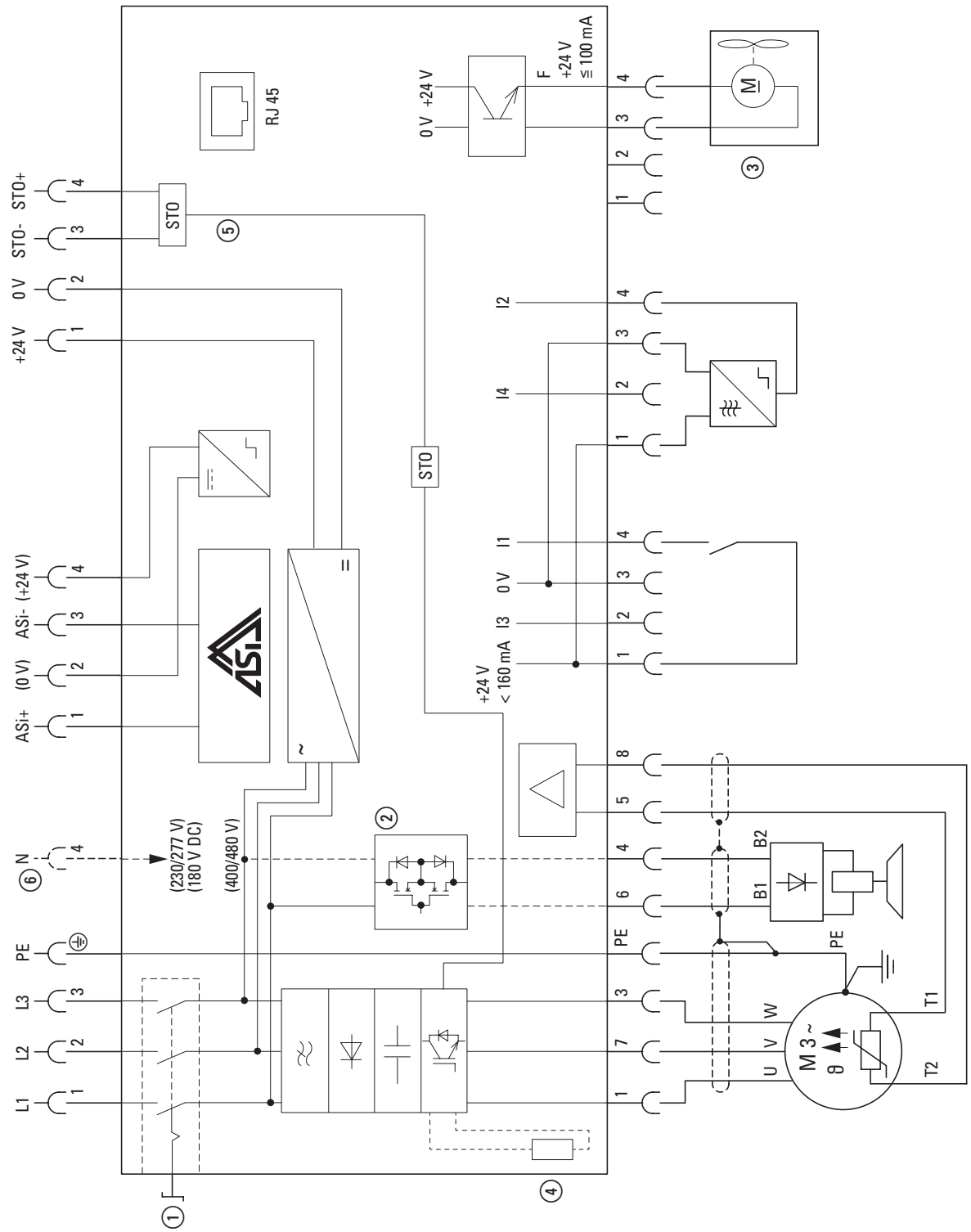

① RASP5-…-xxxR…
② RASP5-xxx1… (180 V DC)
③ RASP5-xxx2… (230/277 V)
④ RASP5-xxx3… (400/480 V)
⑤ RASP5-…-xxxxxx1xx (FAN)
⑥ RASP5-…-xxxx1… (Brake resistor)
⑦ RASP5-…-xxxxx1xxx (STO)
⑧ RASP5-xxx1… (180 V DC), RASP5-xxx2… (230/277 V) only

RAMO5 with PROFINET or Ethernet/IP

RAMO5-D...

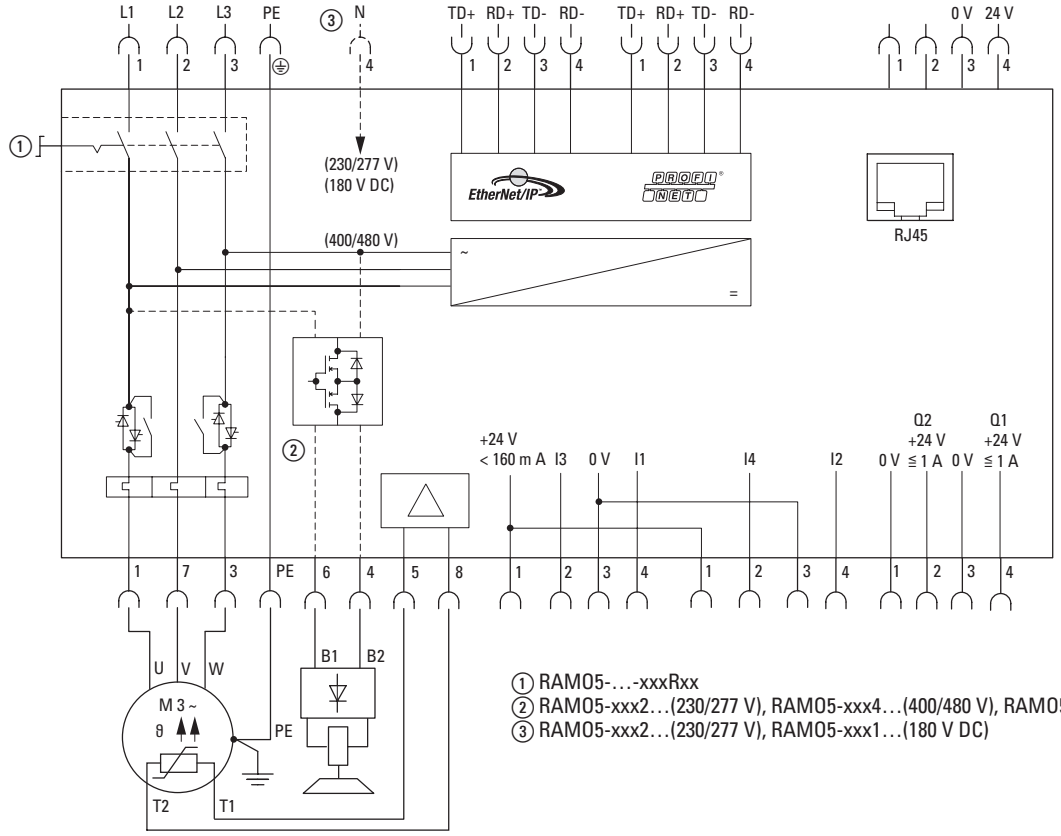

① RAMO5-…-xxxRxx
② RAMO5-xxx2…(230/277 V), RAMO5-xxx4…(400/480 V), RAMO5-xxx1…(180 V DC)
③ RAMO5-xxx2…(230/277 V), RAMO5-xxx1…(180 V DC)

RAMO5-W...

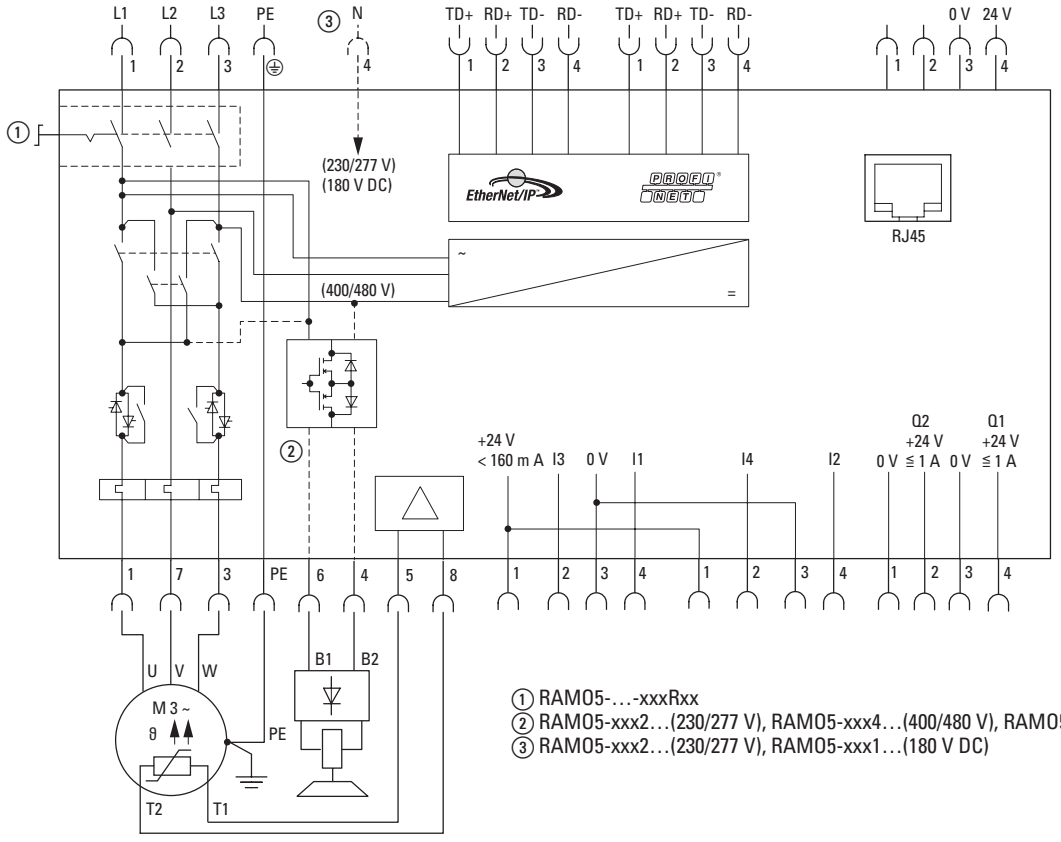

① RAMO5-…-xxxRxx
② RAMO5-xxx2…(230/277 V), RAMO5-xxx4…(400/480 V), RAMO5-xxx1…(180 V DC)
③ RAMO5-xxx2…(230/277 V), RAMO5-xxx1…(180 V DC)

RASP5 with PROFINET or Ethernet/IP

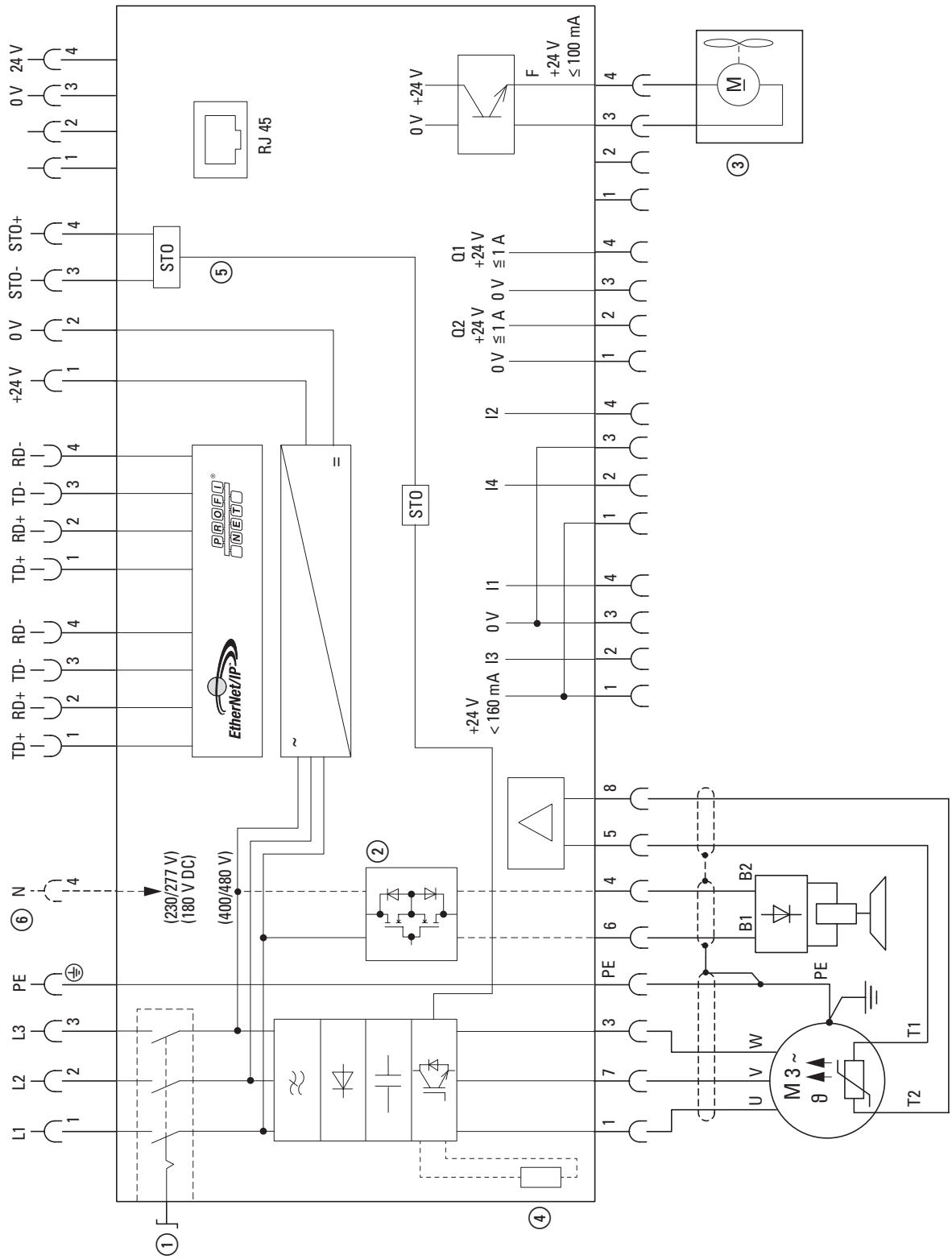

① RASP5-…-xxxR…
② RASP5-xxx1… (180 V DC)
③ RASP5-xxx2… (230/277 V)
④ RASP5-xxx3… (400/480 V)
⑤ RASP5-…-xxxxxx1xx (FAN)
⑥ RASP5-…-xxxx1… (Brake resistor)
⑦ RASP5-…-xxxxx1xxx (STO)
⑧ RASP5-xxx1… (180 V DC), RASP5-xxx2… (230/277 V) only

Technical data

	Formula sign	Unit	Value	
			RAMO5	RASP5
General				
Standards			IEC/EN 60947-4-2 EN 50581	IEC/EN 61800-3 IEC/EN 61800-5-1 EN 50581 EN 61800-5-2 EN ISO 13849-1 EN 62061
Approvals, certificates			CE, CCC, cUL	CE, cUL
Production quality			Directive 2011/65/EU (RoHS), ISO 9001	Directive 2011/65/EU (RoHS), ISO 9001
Protection type			IP65, NEMA 12 / NEMA 12K	IP65, NEMA 12 / NEMA 12K
Mounting position			vertical	vertical
Ambient temperature				
Operation		°C	-10 - +40	-10 - +40 (without derating)
Storage		°C	-40 - +70	-40 - +70
Altitude	H	m	0 to 2000 a.s.l., above 1000 m with 1% derating per 100 m	0 to 2000 a.s.l., above 1000 m with 1% derating per 100 m
Humidity (IEC/EN 50178)	p_w	%	< 95%, relative humidity, non-condensing	< 95%, relative humidity, non-condensing
Vibration (IEC/EN 60068-2-6)				
Amplitude		Hz	3 - 15.8 Vibration amplitude: 0.15 mm	3 - 15.8 Vibration amplitude: 0.15 mm
Acceleration		Hz	15.8 - 150 constant acceleration 2 g	15.8 - 150 constant acceleration 2 g
Mechanical shock resistance (IEC/EN 60068-2-27)			1000 shocks per shaft, Semisinusoidal 15 g/11 ms	1000 shocks per shaft, Semisinusoidal 15 g/11 ms
Main circuit				
Feeder				
Rated operating voltage	U_e	V	3 AC 400/480	3 AC 400/480
Rated operating voltage for brake control	U_e	V	180/207 V DC 230/277 V AC 400/480 V AC	180/207 V DC 230/277 V AC 400/480 V AC
Voltage levels	U_{LN}	V	380 (-10%) - 480 (+10%)	380 (-10%) - 480 (+10%)
Frequency range	f_{LN}	Hz	50 (-10%) - 60 (+10%)	50/60 (45 - 66 Hz ±0%)
Network configuration			Alternating voltage, center-point-earthed star network (TN-S network) Phase-earthed AC supply systems are not permitted.	Alternating voltage, center-point-earthed star network (TN-S network) Phase-earthed AC supply systems are not permitted.
Mains switch-on frequency		Qty.	–	At least a one-minute pause between two switching operations
Mains current	THD	%	< 120	< 120
Short-circuit current	I_K	kA	< 10	< 10
Short-circuit protection device (power bus supply) (Power bus incoming unit)			PKE3/XTUCP-36 FAZ-3-B20 or FAZ-3-C20	PKE3/XTUCP-36 FAZ-3-B20 or FAZ-3-C20
Overvoltage category/ pollution degree (DIN/VDE 0110)			III	III
Rated surge voltage invariability	U_{imp}	kV	4	–
Leakage current to PE earth (EN 50178)	I_{PE}	mA	< 3.5	< 3.5

	Symbol	Unit	Value	
			RAMO5	RASP5
Main circuit				
Power Part				
Instance			RAMO5-D: DOL starter with thyristors and bypass contacts	Variable frequency drive with internal DC link and IGBT inverter
			RAMO5-W: Reversing starter with relays, thyristors and bypass contacts	
			two-phase controlled	
Lifespan (AC3)		Qty.	> 10 millions connections	–
Output voltage	U_2	V AC	U_{LN}	0 - U_{LN}
Output Frequency	f_2	Hz	50/60 Hz	0 - 50 Hz, max. 500 Hz
Rated operational current	I_e	A	6.6	2.4 / 4.3 / 5.6 / 8.5
Load current for the control unit for an external brake	I	A	≦ 0.6 600 mA konstant, 6 A for 120 ms	≦ 0.6 600 mA konstant, 6 A for 120 ms
Adjustable motor protection	I	A	0.3 - 6.6	0.48 - 8.5
Overload withstand capability				
for 60 s every 600 s at +40°C	I_L	%	–	150
for 2 s every 20 s at +40°C	I_H	%	–	200
Allocated motor output[1)]				
(with motor protection) with 400 V, 50 Hz	P	kW	0.09 - 3	0.18 - 4
at 440 - 460 V, 60 Hz	P	HP	0.125 - 3	0.25 - 5
Control voltage				
External control voltage	U	V	24, for actuators, maximum load current: 1 A	24, for quick stop function via AS-Interface plug
Tolerance		%	-15 - +20	
AS-Interface Specification				
Total power consumption from AS-Interface -power supply unit (30 V-)	I	mA	50 + 160 for sensors	50 + 160 for sensors
Specification			S-7.4 S-7.A.E	S-7.4
Station addresses		Qty.	31/62	31
I/O Code or I/O configuration			7 (hex)	7 (hex)
ID-code			4 (hex)	4 (hex)

Notes [1)] Assigned motor rating For normal internally and externally ventilated three-phase asynchronous motors with 1500 rpm (at 50 Hz) or 1800 rpm (at 60 Hz).

Specific rated operational data RAMO5

	Symbol	Unit	Value	
			RAMO5-D…	RAMO5-W…
RAMO5... device series				
Instance			DOL starter L1 → U, L2 → V, L3 → W	Reversing starter FWD: L1 → U, L2 → V, L3 → W REV: L1 → W, L2 → V, L3 → U
Rated operational current	I_e	A	6.6	
Adjustable motor protection		A	0.3 - 6.6	
Assigned motor power at				
400 V, 50 Hz	P	kW	0.18 - 3	
440 - 460 V, 60 Hz	P	HP	0.25 - 4	
Power side (Primary side)				
Number of phases			3	
Device Voltage Rating	U_{LN}	V	380 V (-10%) - 480 V (+10%), 45 - 66 Hz	
Input current	I_{LN}	A	0.3 - 6.6	
Braking				
Control voltage (external brake)	U	V	RAMO5-xxx1…: 180 V DC RAMO5-xxx2…: 230/277 V AC RAMO5-xxx4…: 400/480 V AC	
Load current (external brake)	I	A	0.6 A, max. 6 A for 120 ms	
Heat dissipation at rated operational current (I_e)	P_v	W	max. 8 W, depending on motor current and brake	
Time of reaction				
Motor On (automatic)[1)]	t_{ON}	ms	Motor 20-35, brake 20-35	
Motor Off (automatic)[1)]	t_{OFF}	ms	Motor 20-35, brake 20-35	
Switch off the motor (quick stop)	t_{Off}	ms	Motor 20-35, brake 20-35	
Q1 On	t_{ON}	ms	2 - 20	
Q1 Off	t_{OFF}	ms	2 - 20	
Minimum pulse duration I1/I2	t_{ON}	ms	5	

Notes [1)] Without bus runtime, depending on PLC

Rapid Link 5 decentralized, electronic drive system

Specific rated operational data RASP5

	Symbol	Unit	Value			
			RASP5-2…	RASP5-4…	RASP5-5…	RASP5-8…
RASP5-... device series						
Rated operational current	I_e	A	2.4	4.3	5.6	8.5
Overload current for 60 s every 600 s at 40°C	I_L	A	3.6	6.5	8.4	12.75
Starting current for 2 s every 20 s at 40°C	I_L	A	4.8	8.6	11.2	17
Apparent power at 400 V rated operation	S	kVA	1.84	3.27	4.24	6.49
Assigned motor power						
at 400 V, 50 Hz	P	kW	0.75	1.5	2.2	4
at 440 V, 60 Hz	P	HP	1	2	3	5
Setting range Current limitation (P1-08)	I_2	A	0.2 - 2.4	0.4 - 4.3	0.5 - 5.6	0.8 - 8.5
Power side (Primary side)						
Number of phases			3	3	3	3
Rated operating voltage	U_{LN}	V	380 V (-15%) - 480 V (+10%), 50/60 Hz (380 - 480 V ±0%, 45 - 66 Hz ±0%)			
Input current	I_{LN}	A	2.5	4.1	5.3	7.8
Braking						
Braking value	I/I_e	%	≦ 30	≦ 30	≦ 30	≦ 30
Switch-on threshold for the braking transistor	U_{DC}	V DC	765	765	765	765
DC-braking	I/I_e	%	≦ 100, adjustable	≦ 100, adjustable	≦ 100, adjustable	≦ 100, adjustable
Rated operating voltage for brake control	U	V AC	RASP5-xx1… (180 V DC) RASP5-xx2… (230/277 V AC) RASP5-xx4… (400/480 V AC)			
Switching frequency	f_{PWM}	kHz	8 (adjustable 4 – 32)			
U/f characteristic			linear	linear	linear	linear
Heat dissipation at rated operational current (I_e) and a pulse frequency (f_{PWM}) of 6 kHz	P_v	W	32	46	58	95
Heat dissipation at idle (standby) with AS-Interface supply voltage	P_v	W	< 9	< 9	< 9	< 12
Efficiency	η		0.97	0.98	0.98	0.98
Fans						
internal			temperature controlled			
Device fans on heat sink			–	–	–	Fans
Output frequency	f_z	Hz	50/60 Hz, adjustable 0 - 320 Hz			
1. fixed frequency (P1-12)	f_z	Hz	30	30	30	30
2. fixed frequency (P2-01)	f_z	Hz	40	40	40	40
3. fixed frequency (P2-02)	f_z	Hz	50	50	50	50
4. fixed frequency (P2-03)	f_z	Hz	50	50	50	50
Factory set response time						
Motor On (automatic)[1)]	t_{ON}	ms	< 10	< 10	< 10	< 10
Motor Off (automatic)[1)]	t_{OFF}	ms	< 10	< 10	< 10	< 10
Switch off the motor (quick stop)	t_{OFF}	ms	< 10	< 10	< 10	< 10
Minimum pulse duration I3/I4	t_{ON}	ms	5	5	5	5
Longest permissible length of motor cable (EMC, 2nd environment, C3)	l	m	25	25	25	25

Notes [1)] Without bus runtime, depending on PLC.

Dimensions and weights

RAM05-...-xxx0xx

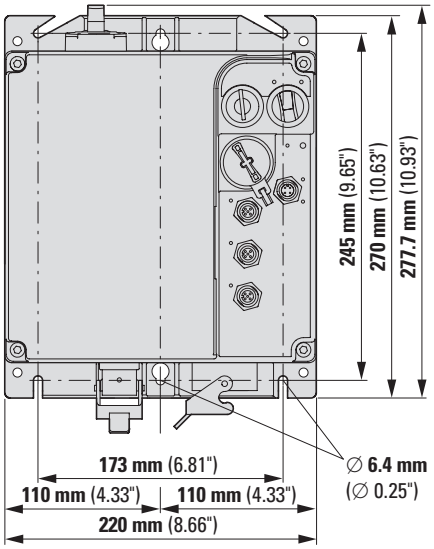

RAM05-...-xxx0xx

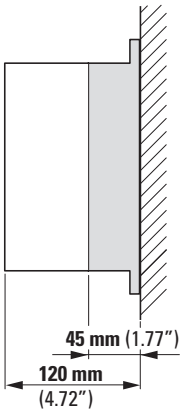

RAM05-...-xxxRxx

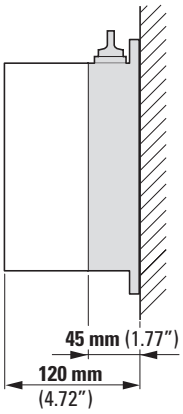

RASP5-...-xxx0xx0xx

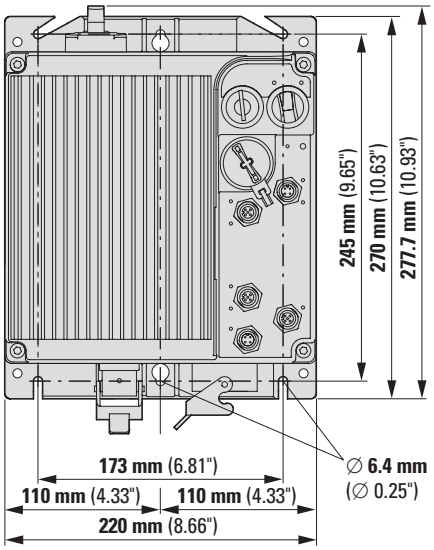

RASP5-...-xxx0xx1xx

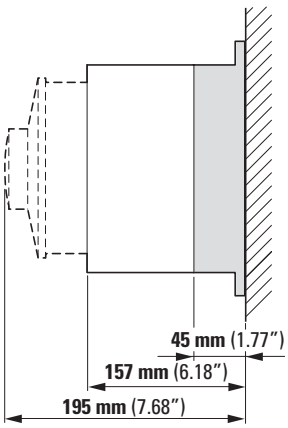

RASP5-...-xxxR

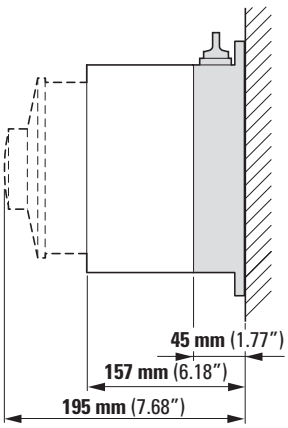

4 Appendix

Full-load motor-running currents in amperes corresponding to various AC horsepower ratings

HP	110 - 120 V			220 - 240 V [1) 2)]			360 - 380 V		440 - 480 V			550 - 600 V		
	Single phase	Two phase	Three phase	Single phase	Two phase	Three phase	Single phase	Three phase	Single phase	Two phase	Three phase	Single phase	Two phase	Three phase
1/10	3.0	–	–	1.5	–	–	1.0	–	–	–	–	–	–	–
1/8	3.8	–	–	1.9	–	–	1.2	–	–	–	–	–	–	–
1/6	4.4	–	–	2.2	–	–	1.4	–	–	–	–	–	–	–
1/4	5.8	–	–	2.9	–	–	1.8	–	–	–	–	–	–	–
1/3	7.2	–	–	3.6	–	–	2.3	–	–	–	–	–	–	–
1/2	9.8	4.0	4.4	4.9	2.0	2.2	3.2	1.3	2.5	1.0	1.1	2.0	0.8	0.9
3/4	13.8	4.8	6.4	6.9	2.4	3.2	4.5	1.8	3.5	1.2	1.6	2.8	1.0	1.3
1	16.0	6.4	8.4	8.0	3.2	4.2	5.1	2.3	4.0	1.6	2.1	3.2	1.3	1.7
1-1/2	20.0	9.0	12.0	10.0	4.5	6.0	6.4	3.3	5.0	2.3	3.0	4.0	1.8	2.4
2	24.0	11.8	13.6	12.0	5.9	6.8	7.7	4.3	6.0	3.0	3.4	4.8	2.4	2.7
3	34.0	16.6	19.2	17.0	8.3	9.6	10.9	6.1	8.5	4.2	4.8	6.8	3.3	3.9
5	56.0	26.4	30.4	28.0	13.2	15.2	17.9	9.7	14.0	6.6	7.6	11.2	5.3	6.1
7-1/2	80.0	38.0	44.0	40.0	19.0	22.0	27.0	14.0	21.0	9.0	11.0	16.0	8.0	9.0
10	100	48.0	56.0	50.0	24.0	28.0	33.0	18.0	26.0	12.0	14.0	20.0	10.0	11.0
15	135	72.0	84.0	68.0	36.0	42.0	44.0	27.0	34.0	18.0	21.0	27.0	14.0	17.0
20	–	94.0	108	88.0	47.0	54.0	56.0	34.0	44.0	23.0	27.0	35.0	19.0	22.0
25	–	118	136	110	59.0	68.0	70.0	44.0	55.0	29.0	34.0	44.0	24.0	27.0
30	–	138	160	136	69.0	80.0	87.0	51.0	68.0	35.0	40.0	54.0	28.0	32.0
40	–	180	208	176	90.0	104	112	66.0	88.0	45.0	52.0	70.0	36.0	41.0
50	–	226	260	216	113	130	139	83.0	108	56.0	65.0	86.0	45.0	52.0
60	–	–	–	–	133	154	–	103	–	67.0	77.0	–	53.0	62.0
75	–	–	–	–	166	192	–	128	–	83.0	96.0	–	66.0	77.0
100	–	–	–	–	218	248	–	165	–	109	124	–	87.0	99.0
125	–	–	–	–	–	312	–	208	–	135	156	–	108	125
150	–	–	–	–	–	360	–	240	–	156	180	–	125	144
200	–	–	–	–	–	480	–	320	–	208	240	–	167	192
250	–	–	–	–	–	602	–	403	–	–	302	–	–	242
300	–	–	–	–	–	–	–	482	–	–	361	–	–	289
350	–	–	–	–	–	–	–	560	–	–	414	–	–	336
400	–	–	–	–	–	–	–	636	–	–	477	–	–	382
500	–	–	–	–	–	–	–	786	–	–	590	–	–	472

Notes

[1)] To obtain full-load currents for 200 and 208 V motors, increase corresponding 220 - 240 V ratings by 15 and 10 percent, respectively.
[2)] To obtain full-load currents for 265 and 277 V motors, decrease corresponding 220 - 240 V ratings by 13 and 17 percent, respectively.

Quote from "Power Conversion Equipment - UL 508C, May 3, 2002".
Reproduced from UL 508 C, Power Conversion Equipment, 3rd edition (May 2, 2002) with permission of Underwriters Laboratories Inc.

Rated operational current (in amperes) and shaft power (in kilowatts) of standard three-phase squirrel-cage motors (in conformity with IEC 60947-4-1)

Minimum fuse size for short-circuit protection of three-phase motors

The maximum value depends on the switching device or the overload relay.

Motor Power			230 V			400 V			440 V			500 V			690 V		
			Rated motor current	Fuse Starting Direct	Y/Δ	Rated motor current	Fuse Starting Direct	Y/Δ	Rated motor current	Fuse Starting Direct	Y/Δ	Rated motor current	Fuse Starting Direct	Y/Δ	Rated motor current	Fuse Starting Direct	Y/Δ
kW	cos φ	η (%)	A	A	A	A	A	A	A	A	A	A	A	A	A	A	A
0.06	0.7	58	0.37	2	–	0.21	2	–	0.19	2	–	0.17	2	–	0.12	2	–
0.09	0.7	60	0.54	2	–	0.31	2	–	0.28	2	–	0.25	2	–	0.18	2	–
0.12	0.7	60	0.72	4	2	0.41	2	–	0.37	2	–	0.33	2	–	0.24	2	–
0.18	0.7	62	1.04	4	2	0.6	2	–	0.54	2	–	0.48	2	–	0.35	2	–
0.25	0.7	62	1.4	4	2	0.8	4	2	0.76	2	–	0.7	2	–	0.5	2	–
0.37	0.72	66	2	6	4	1.1	4	2	1	4	2	0.9	2	2	0.7	2	–
0.55	0.75	69	2.7	10	4	1.5	4	2	1.4	4	2	1.2	4	2	0.9	4	2
0.75	0.79	74	3.2	10	4	1.9	6	4	1.7	4	2	1.5	4	2	1.1	4	2
1.1	0.81	74	4.6	10	6	2.6	6	4	2.4	4	2	2.1	6	4	1.5	4	2
1.5	0.81	74	6.3	16	10	3.6	6	4	3.3	6	4	2.9	6	4	2.1	6	4
2.2	0.81	78	8.7	20	10	5	10	6	4.6	10	6	4	10	4	2.9	10	4
3	0.82	80	11.5	25	16	6.6	16	10	6	16	10	5.3	16	6	3.8	10	4
4	0.82	83	14.8	32	16	8.5	20	10	7.7	16	10	6.8	16	10	4.9	16	6
5.5	0.82	86	19.6	32	25	11.3	25	16	10.2	20	10	9	20	16	6.5	16	10
7.5	0.82	87	26.4	50	32	15.2	32	16	13.8	25	16	12.1	25	16	8.8	20	10
11	0.84	87	38	80	40	21.7	40	25	19.8	32	25	17.4	32	20	12.6	25	16
15	0.84	88	51	100	63	29.3	63	32	26.6	50	32	23.4	50	25	17	32	20
18.5	0.84	88	63	125	80	36	63	40	32.8	63	32	28.9	50	32	20.9	32	25
22	0.84	92	71	125	80	41	80	50	37	80	40	33	63	32	23.8	50	25
30	0.85	92	96	200	100	55	100	63	50	100	63	44	80	50	32	63	32
37	0.86	92	117	200	125	68	125	80	61	125	80	54	100	63	39	80	50
45	0.86	93	141	250	160	81	160	100	74	125	100	65	125	80	47	80	63
55	0.86	93	173	250	200	99	200	125	90	125	100	79	160	80	58	100	63
75	0.86	94	233	315	250	134	200	160	122	160	125	107	200	125	78	160	100
90	0.86	94	279	400	315	161	250	200	146	200	160	129	200	160	93	160	100
110	0.86	94	342	500	400	196	315	200	179	250	200	157	250	160	114	200	125
132	0.87	95	401	630	500	231	400	250	210	315	250	184	250	200	134	250	160
160	0.87	95	486	630	630	279	400	315	254	400	250	224	315	250	162	250	200
200	0.87	95	607	800	630	349	500	400	318	400	315	279	400	315	202	315	250
250	0.87	95	–	–	–	437	630	500	397	630	400	349	500	400	253	400	315
315	0.87	96	–	–	–	544	800	630	495	630	630	436	630	500	316	500	400
400	0.88	96	–	–	–	683	1000	800	621	800	800	547	800	630	396	630	400
450	0.88	96	–	–	–	769	1000	800	699	800	800	615	800	630	446	630	630
500	0.88	97	–	–	–	–	–	–	–	–	–	–	–	–	491	630	630
560	0.88	97	–	–	–	–	–	–	–	–	–	–	–	–	550	800	630
630	0.88	97	–	–	–	–	–	–	–	–	–	–	–	–	618	800	630

Notes

The rated motor currents apply to normal internally and surface-cooled three-phase motors with 1500 rpm.
DOL starting: Starting current max. 6 × rated motor current.
Starting time max. 5 s.
Y/Δ-start: Starting current max. 2 × motor rated current.
Starting time max. 15 s.
Set overload relay in line to 0.58 × motor rated current.

Fuse ratings at Y/Δ starting apply also to three-phase slipring motors.
For higher rated currents, starting currents and/or longer starting times, larger fuses will be required.
Table applies for time delay and gL fuses (VDE 0636)

For low voltage h.b.c. fuses with aM characteristics, the fuse should be equal to the rated current.

Drives engineering selection criteria

Each drive task requires a drive motor. The speed, torque and controllability of each motor must fulfill the requirements of the task. The following generally applies:
the application determines the drive.
The drive motor most frequently used worldwide in industrial plants and large buildings is the three-phase asynchronous motor. Its robust and simple construction as well as its high degrees of protection and standard types are the main features of this inexpensive electric motor.

Motor connection

When connecting a three-phase motor to the mains supply, the data on the rating plate of the motor must correspond to the mains voltage and frequency.
The standard connection is implemented via six screw terminals in the terminal box of the motor and with two types of circuit, the star connection and the delta circuit, depending on the mains voltage.

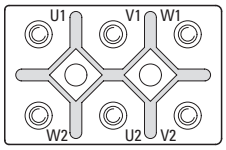

The rotation direction of a motor is always determined by directly looking at the drive shaft of the motor (from the drive end). On motors with two shaft ends, the driving end is denoted with D (= Drive), the non-driving end with N (= No drive).

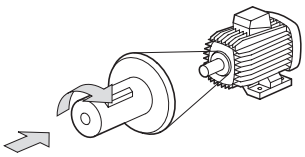

Regardless of the circuit type and the type of three-phase asynchronous motor, the connections must be labeled, so that their alphabetical sequence (e.g. U1, V1, W1) corresponds with the order of the mains voltage phase sequence (L1, L2, L3) and causes the motor to rotate clockwise.

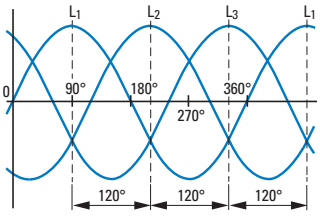

On the three-phase asynchronous motor, three windings are arranged offset from each other by 120°/p (p = number of pole pairs). To generate a rotating field in the motor, an alternating voltage is applied to each phase in turn at a time delay of 120°.

The effect of inductance causes the rotation field and torque to be formed in the rotor winding. The speed of the motor thus depends on the number of pole pairs and the frequency of the supply voltage. The operating direction can be reversed by swapping over two of the supply phases.

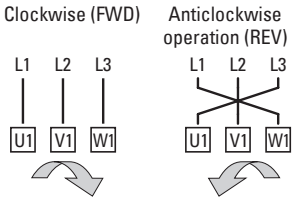

FWD = forward run (clockwise rotation field)
REV = reverse run (anticlockwise rotation field active)

Information on the rating plate

The electrical and mechanical rating data of the motor must be stated on its rating plate (IEC 34-1, VDE 0530). The data on the rating plate describes the stationary operation of the motor in the area of its operating point (MN, e.g. at 400 V and 50 Hz). The operational data is unstable in the motor start phase.
The following examples show the rating plates for two motors with a motor shaft output of 4 kW and the respective connection circuits on a three-phase AC network with 400 V and 50 Hz.

Star connection

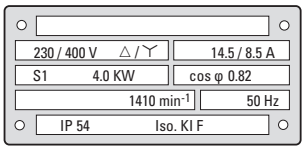

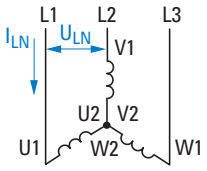

$U_{LN} = \sqrt{3} \times U_W$, $I_{LN} = I_W$

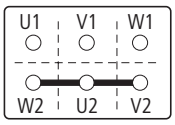

- With the specified 230/400 V voltage, this motor must be connected to the three-phase system (U_{LN} = 400 V) in a star-connected circuit.
- The voltage of each motor winding is designed for 230 V. The windings must therefore be connected in sequence to the phase voltage (400 V).
- The three winding phases (W2-U2-V2) are configured in the terminal box to the so-called star point. The voltage of the individual phases to the star point is 230 V (= UW).

Delta circuit

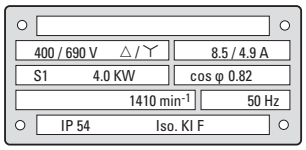

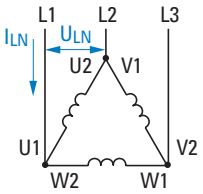

$U_{LN} = U_W$, $I_{LN} = \sqrt{3} \times I_W$

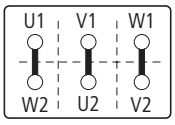

- With the specified 400/690 V voltage, this motor must be connected to the three-phase system (U_{LN} = 400 V) in a delta circuit.
- Each motor winding is designed here for the maximum phase voltage of 400 V and can be connected directly.
- The three winding phases (U1 – W2, V1 – U2, W1 – V2) are combined in the terminal box and connected directly to the individual phases.

Startup characteristics

The following figure shows the characteristic startup curves of a three-phase asynchronous motor.

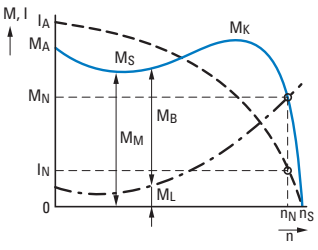

I_A: Starting current
I_N: Rated operational current at the operating point
M_A: Starting torque
M_B: Accelerating torque ($M_M > M_L$)
M_K: Breakdown torque
M_L: Load torque
M_M: Motor torque
M_N: Rated load torque, (stable operating point, intersection point of the three-phase speed torque characteristic with the load characteristic)
M_S: Pull-up torque
n: Speed (actual value)
n_N: Rated speed at the operating point
n_S: Synchronous speed ($n_S - n_N$ = slip speed s)

Synchronous speed:

$$n_S = \frac{f}{p}$$

Slip speed in %:

$$s = \frac{n_s - n}{n_s} \times 100\%$$

Three-phase asynchronous motor speed:

$$n = \frac{f}{p} \times (1 - s)$$

f Frequency of voltage in Hz (= s^{-1})
n: Speed in r.p.m.
p Number of pole pairs
s: Slip speed in r.p.m.

Electric power:

$$P_1 = U \cdot I \cdot \sqrt{3} \cdot \cos\varphi$$

P_1: Electrical power in W
U: Rated operating voltage in V
I: Rated operational current in A
cos φ: Power factor

Motor output (power equation):

$$P_2 = \frac{M_N \times n}{9550}$$

P_2: Mechanical shaft output power in kW
M_N: Rated torque in Nm
n: Speed in r.p.m.

Efficiency:

$$\eta = \frac{P_2}{P_1}$$



Worldwide export of machines and plants

European machine and system building and worldwide exports are closely related. Even if you don't export your machines at present, you should be prepared for it in the future. Eaton provides switchgear and protective devices with all the essential approvals and certificates for machine and system building. In most countries around the world, conformity with international standards is the sole requirement for successful exports. This is because components in these locations are governed by compliance with well known and established IEC standards. In this respect, the European CE mark is not only the passport for exports within Europe but also far beyond its borders.



World market equipment for machine building

Nearly all the switchgear and protective devices of Eaton's Moeller series are world market devices. Each product line thus carries all the approvals and certification marks required for worldwide use.

These product lines include those for

- Pilot devices, limit switches
- Contactors and various timing and special relays
- Motor-protective circuit-breakers and relays
- Electronic components and systems.

With circuit-breakers and switch-disconnectors, Eaton offers IEC devices for use in most countries in the world and NA devices with virtually the same dimensions and the same accessories for the North American market. This considerably simplifies device selection since the North American standards often involve the need for considerably different technical specifications.

www.eaton.de/export

Electrical engineering products and their applications are not harmonized internationally.

The greatest differences to the IEC world are in North America, i.e. the USA and Canada. For many newcomers to the export business, it is initially surprising to experience the very different approaches and solutions.

Special components, such as handles for main switches that can only be operated by the intentional switching of an additional handle when the control panel door is opened, may sometimes be required for export to North America. Likewise, the European motor-protective circuit-breaker is only accepted with an upstream protective device (such as a UL248 fuse) or with larger air and creepage distances at the input terminals. Eaton is the competent partner of choice for export-related issues here.



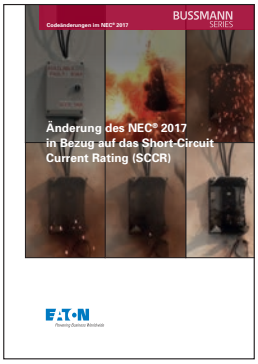



Explanations regarding the changes to NEC 2020 and NEC 2017

This publication covers all important "chapters, articles" and "parts" of NEC 2020. Each code section is identified with "ÜBERARBEITUNG/ REVISION" or "NEU/NEW," followed by an explanation of what it means and references to related NEC sections. It points out what needs to be observed in order to check whether there is conformity with the code. Where required, it provides a detailed explanation of the standard.

Qualified information is a critical key to success



For reliable information concerning the approval of components for export to North America, please refer to the Eaton online catalog. The catalog provides information for each product regarding the applicable product standard, the e-file number, the Category Control Number, or the CSA class number You can incorporate this information into your bills of materials and documentation in order to be well prepared for all relevant acceptance procedures.

Approbationen

Product Standards	UL 508A; CSA-C22.2 No.94; IEC/EN60529; CE marking
UL File No.	E54120, E337418
UL Category Control No.	NITW
CSA File No.	27130
CSA Class No.	3211-07
North America Certification	UL listed, CSA certified
Specially designed for North America	Yes
Suitable for	Industrial Control Panels
Current Limiting Circuit-Breaker	No
Degree of Protection	IEC: IP65; UL/CSA Types 1, 12, 13, 4X, indoor only

Up to 13 information items are listed here for each product, e.g., suitability for use in feeders or branch circuits, maximum operating voltage, or the North American degree of protection, such as UL / CSA Type 4X.

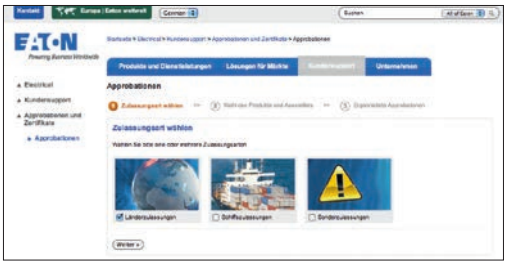

The link www.Eaton.com/certificates shows the relevant approvals or permits for each component type. This therefore enables you to view the certificates provided or, depending on the test authority, also the product report. The information given is the same as what is provided in the databases of the authorities.









In order to avoid problems and other issues, you should first consult the large number of publications that Eaton offers in regard to the issue of exports to North America. They contain the implementation of the codes & standards and a description of different practices.

You can find the various relevant technical essays at www.Eaton.de/export, where they are available for download free of charge.



To find the right contact person:

At Eaton, we believe that building and maintaining strong relationships with our customers is something that deserves our undivided attention.

This is why you can rest assured knowing that you will be able to count on us for every project from the very start. To find out whom to contact for your needs, please visit our website:

In just a few steps, we will get you the contact information for the person or team in charge of support for your specific industry in your region.

Your contacts in your region: **www.Eaton.com/contacts**

Do you have questions about our products?

Our technical support will advise you on all questions concerning our products.

Germany
Technical Support
www.Eaton.de/EatonCare

Your contact persons in your region:
Eaton.com/contacts

Helpline

E-Mail: AfterSalesEGBonn@eaton.com
Internet: www.Eaton.com/aftersales

Onsite Service

Troubleshooting, inspections, tests, maintenance, commissioning

Repairs

Replacement devices and spare parts for current and discontinued products; direct/warranty replacement for select products; repairs

Online Services

Downloads, FAQs and interactive troubleshooting

Eatons After Sales Service

Eaton is known for its unparalleled after-sales support for all low-voltage switchgear, switchgear systems, and services. For more detailed information, as well as to view our terms and conditions, please visit www.Eaton.com/aftersales

Service Specialists
Gain the benefit of our Service personnel. Comprehensive expertise linked with long term experience and modern equipment help you find the solution to your tasks.

Material
Components, cards and spare parts of the Eaton product range are available for your use.

Service products
The After Sales Service offers appropriate service products for the Eaton products.



Eaton is an intelligent power management company dedicated to improving the quality of life and protecting the environment for people everywhere. We are guided by our commitment to do business right, to operate sustainably and to help our customers manage power – today and well into the future. By capitalizing on the global growth trends of electrification and digitalization, we're accelerating the planet's transition to renewable energy, helping to solve the world's most urgent power management challenges, and doing what's best for our stakeholders and all of society.

Founded in 1911, Eaton has been listed on the NYSE for nearly a century. We reported revenues of $19.6 billion in 2021 and serve customers in more than 170 countries. For more information, visit **www.eaton.com**.

Subject to changes to products, information contained in this document and prices as well as errors and omissions. Only the order confirmation and the technical documentation of Eaton are binding Photos and illustrations also do not guarantee a specific design or functionality. Their further use in any form must be approved by Eaton in advance. The same applies to brands (especially Eaton, Moeller, Cutler-Hammer, Cooper, Bussmann). The terms of sale of Eaton apply, as referenced on Eaton internet pages and Eaton order confirmations.

Eaton Industries GmbH
Hein-Moeller-Str. 7–11
D-53115 Bonn / Germany

© 2014 by Eaton Corporation
All Rights Reserved
Common name: CA04020001Z-EN-INT
Version 2.0 September 2022

Eaton is a registered trademark of Eaton Corporation

All other trademarks are property of their respective owners.

Follow us on social media to get the latest product and support information.

Powering Business Worldwide