BAV99

HIGH SPEED DOUBLE DIODE

PRV : 85 Volts
Io : 125 mA

FEATURES :

* Small plastic SMD package
* High switching speed : max. 4 ns
* Continuous reverse voltage : max.75 V
* Repetitive peak reverse voltage : max. 85 V
* Repetitive peak forward current : max. 450 mA
* Pb / RoHS Free

MECHANICAL DATA :

* Case : SOT-23 plastic Case
* Marking Code : A7

SOT-23

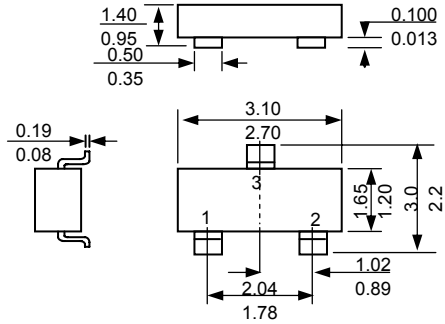

BAV99

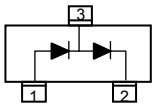

Dimensions in millimeters

MAXIMUM RATINGS AND ELECTRICAL CHARACTERISTICS

Rating at 25 °C ambient temperature unless otherwise specified.

Parameter	Symbol	Value	Unit
Maximum Repetitive Peak Reverse Voltage	V_{RRM}	85	V
Maximum Continuous Reverse Voltage	V_R	75	V
Maximum Continuous Forward Current (Note 1)	I_F	125	mA
Maximum Repetitive Peak Forward Current	I_{FRM}	450	mA
Maximum Non-repetitive Peak Forward Current t = 1µs	I_{FSM}	4	A
(square wave; Tj = 25 °C prior to surge) t = 1ms		1	
t = 1s		0.5	
Total Power Dissipation (Note 1)	P_{tot}	250	mW
Thermal Resistance Junction to tie-point	$R_{th\ j\text{-}tp}$	360	K/W
Thermal Resistance Junction to Ambient (Note 1)	$R_{th\ j\text{-}a}$	500	K/W
Junction Temperature Range	T_J	150	°C
Storage Temperature Range	T_{STG}	-65 to +150	°C

ELECTRICAL CHARACTERISTICS (Rating at 25 °C ambient temperature unless otherwise specified.)

Parameter	Test Condition	Symbol	Min.	Typ.	Max.	Unit
Forward Voltage	I_F = 1 mA	V_F	-	-	715	mV
	I_F = 10 mA	V_F	-	-	855	mV
	I_F = 50mA	V_F	-	-	1.0	V
	I_F = 150 mA	V_F	-	-	1.25	V
Reverse Current	V_R = 25 V	I_R	-	-	30	nA
	V_R = 75 V	I_R	-	-	1.0	µA
	V_R = 25 V ; Tj = 150 °C	I_R	-	-	30	µA
	V_R = 75 V ; Tj = 150 °C	I_R	-	-	50	µA
Diode Capacitance	V_R = 0 V, f = 1 MHz	C_D	-	-	1.5	pF
Reverse Recovery Time	I_F = 10 mA to I_R = 10 mA, I_R = 1mA , R_L = 100 Ω	Trr	-	-	4	ns

Notes : (1) Device mounted on an FR-4 printed-circuit board

RATINGS AND CHARACTERISTIC CURVES (BAV99)

FIG.1 - MAXIMUM PERMISSIBLE CONTINUOUS FORWARD CURRENT AS A FUNCTION OF AMBIENT TEMPERATURE

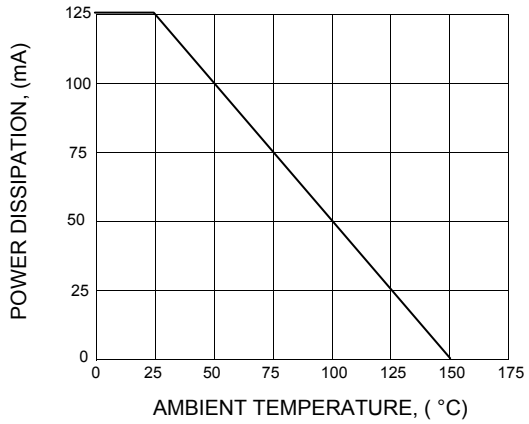

FIG.2 - DIODE CAPACITANCE VS. REVERSE VOLTAGE

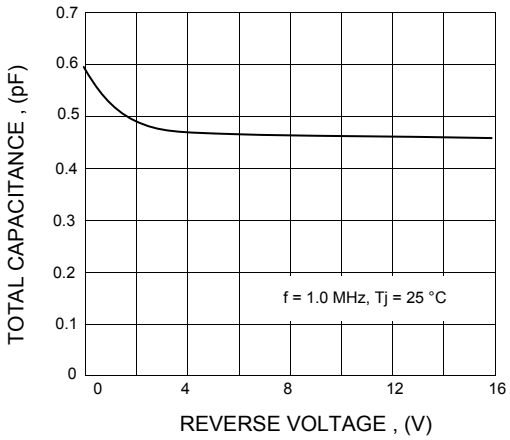

FIG.3 - FORWARD CURRENT AS A FUNCTION OF FORWARD VOLTAGE

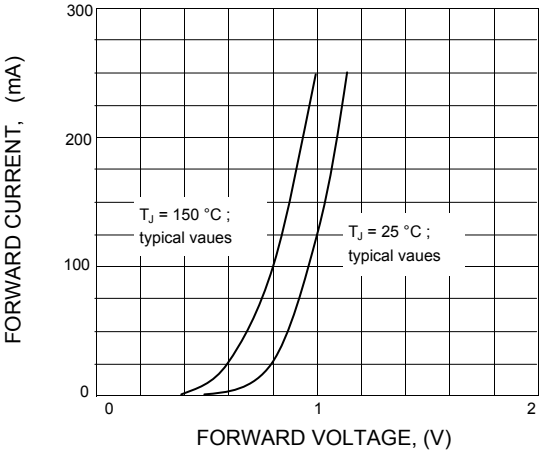

FIG.4 - REVERSE CURRENT AS A FUNCTION OF JUNCTION TEMPERATURE

