www.eicsemi.com

BR1500W - BR1510W

SILICON BRIDGE RECTIFIERS

PRV : 50 - 1000 Volts

Io : 15 Amperes

FEATURES :

* High current capability
* High surge current capability
* High reliability
* Low reverse current
* Low forward voltage drop
* Ideal for printed circuit board
* Pb / RoHS Free

MECHANICAL DATA :

* Case : Molded plastic with heatsink integrally mounted in the bridge encapsulation
* Epoxy : UL94V-O rate flame retardant
* Terminals : Plated lead solderable per MIL-STD-202, Method 208 guaranteed
* Polarity : Polarity symbols marked on case
* Mounting position : Bolt down on heat-sink with silicone thermal compound between bridge and mounting surface for maximum heat transfer efficiency
* Weight : 15.95 grams

BR50W

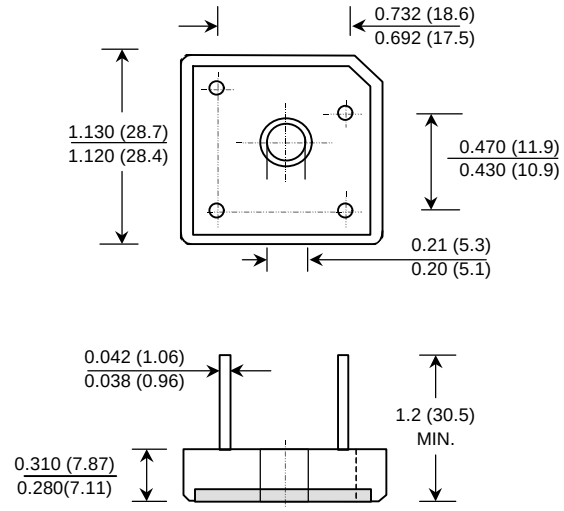

Dimensions in inches and (millimeters)

MAXIMUM RATINGS AND ELECTRICAL CHARACTERISTICS

Rating at 25 °C ambient temperature unless otherwise specified.
Single phase, half wave, 60 Hz, resistive or inductive load.
For capacitive load, derate current by 20%.

RATING	SYMBOL	BR 1500W	BR 1501W	BR 1502W	BR 1504W	BR 1506W	BR 1508W	BR 1510W	UNIT
Maximum Recurrent Peak Reverse Voltage	V_{RRM}	50	100	200	400	600	800	1000	V
Maximum RMS Voltage	V_{RMS}	35	70	140	280	420	560	700	V
Maximum DC Blocking Voltage	V_{DC}	50	100	200	400	600	800	1000	V
Maximum Average Forward Current Tc = 55°C	$I_{F(AV)}$	15							A
Peak Forward Surge Current Single half sine wave Superimposed on rated load (JEDEC Method)	I_{FSM}	300							A
Current Squared Time at t < 8.3 ms.	I^2t	375							A^2S
Maximum Forward Voltage per Diode at I_F = 7.5 A	V_F	1.1							V
Maximum DC Reverse Current Ta = 25 °C	I_R	10							µA
at Rated DC Blocking Voltage Ta = 100 °C	$I_{R(H)}$	200							µA
Typical Thermal Resistance (Note 1)	RθJC	1.9							°C/W
Operating Junction Temperature Range	T_J	- 40 to + 150							°C
Storage Temperature Range	T_{STG}	- 40 to + 150							°C

Notes :

1. Thermal Resistance from junction to case with units mounted on a 5" x 4" x 3" (12.7cm.x 10.2cm.x 7.3cm.) Al.-Finned Plate

RATING AND CHARACTERISTIC CURVES (BR1500W - BR1510W)

FIG.1 - DERATING CURVE FOR OUTPUT RECTIFIED CURRENT

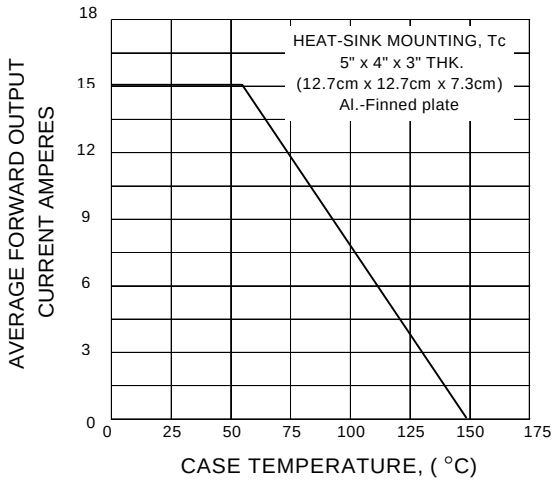

FIG.2 - MAXIMUM NON-REPETITIVE PEAK FORWARD SURGE CURRENT

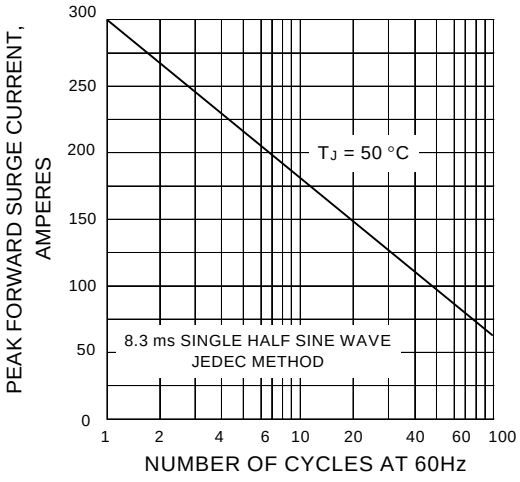

FIG.3 - TYPICAL FORWARD CHARACTERISTICS PER DIODE

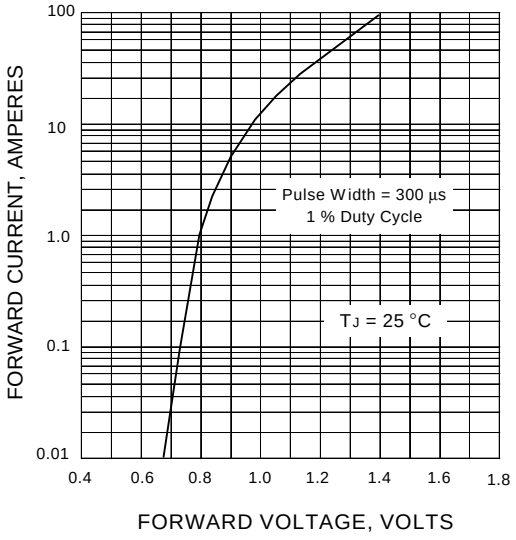

FIG.4 - TYPICAL REVERSE CHARACTERISTICS PER DIODE

