Introduction

EIC is a major international manufacturer and distributor of power discrete semiconductors. With over 15,000 parts and more than 50 package types, EIC offers one of the most comprehensive diode portfolios in the industry.

EIC provides its customers with superb service and technical support, as well as high quality products at competitive prices. The company's processes and procedures from design to after sales service are fully ISO 9001, ISO 14001, and ISO/TS16949 certified and all products are RoHS compliant. With sales offices worldwide, and a reliable logistics process, EIC is able to offer customers quick responses to both technical enquiries and product delivery.

The EIC Engineering team is focused on developing superior discrete products to satisfy the variety of requirements of new customer systems. The company also offers an extensive capability for research and development of special purpose devices, to satisfy unique customer applications. These are achieved with close attention to cost reduction and fast time to market.

EIC had expanded a wafer fabrication plant in Bangkok. Together with the existing assembly facility, EIC will be able to offer customers full end to end manufacturing and product development support. This will allow the company to have even better control over product quality, cost and flexibility of supply. Faster development of new technologies and products will also result from this centralised manufacturing process.

Electronics Industry Public Company Limited, established since 1984, is listed on the Stock Exchange of Thailand in the Electronics Component section under Technology Group, using 'EIC' as its trading abbreviation.

To help you to choose the best components for your application, this product selection guide contains numerical, product and packaging information; plus contact addresses for additional support.

Symbols

C_J	Junction Capacitance
I_F	DC Forward Current
$I_{(AV)}$	Average Forward Rectifier Current
I_{FSM}	Peak Forward Surge Current
I_R	Reverse Current
I_{RSM}	Maximum Non-Repetitive Peak Current
I_O	Mean Forward Current
I_T	On-State Test Current
I_{PPM}	Maximum peak impulse Current
I^2t	Rating for Fusing
P_D	Steady State Power Dissipation
P_{PK}	Peak Power Dissipation
$R_{\Theta JA}$	Thermal Resistance (Junction to Ambient)
$R_{\Theta JC}$	Thermal Resistance (Junction to Case)
$R_{\Theta JL}$	Thermal Resistance (Junction to Lead)
Ta	Ambient Temperature
Tc	Case Temperature
T_J	Junction Temperature
T_L	Lead Temperature
Ttp	Tie-Point Temperature
Trr	Reverse Recovery Time
$V_{(BR)}$	Reverse Breakdown Voltage
V_F	Forward Voltage
V_R	Reverse Voltage
V_{RM}	Maximum Recurrent Peak Reverse Voltage
V_{RMS}	RMS Input Voltage
V_{RSM}	Maximum Reverse Voltage (Clamping Voltage) at I_{RSM}
V_{RRM}	Repetitive Peak Reverse Voltage
V_{RWM}	Working Peak Reverse Voltage (Stand-off Voltage)
V_Z	Zener Voltage
Z_{ZK}	Zener Impedance at I_{ZK}
Z_{ZT}	Zener Impedance at I_{ZT}

Contents

Numerical Index 4
Silicon Rectifier Diodes 14
Glass Passivated Rectifier Diodes 22
High Speed Switching Diodes 25
High Voltage Rectifier Diodes 30
High Voltage Fast Recovery Rectifier Diodes 31
Cell Rectifier Diodes 33
Automotive Rectifier Diodes 34
Avalanche Rectifier Diodes 35
Avalanche Fast Recovery Rectifier Diodes 36
Fast Recovery Rectifier Diodes 39
Fast Recovery Glass Passivated Rectifier Diodes 49
High Efficient Rectifier Diodes 51
Super Fast Rectifier Diodes 53
Super Fast Glass Passivated Rectifier Diodes 59
Schottky Barrier Rectifier Diodes 60
Zener Diodes 74
Transient Voltage Suppressor Diodes 148
Low Capacitance Transient Voltage Suppressor Diodes 195
Ultra Low Capacitance Transient Voltage Suppressor Diodes 204
Automotive Transient Suppressor Diodes 206
Silicon Bridge Rectifiers 208
Glass Passivated Bridge Rectifiers 216
Mini Bridge Rectifiers 218
Avalanche Bridge Rectifiers 220
Fast Recovery Bridge Rectifiers 222
Bi-directional Trigger - DIACS 224
Thyristor - SIDAC 224
Packaging Information 225
Package Outlines 234
EIC Worldwide Sales Offices and Representatives 244

Numerical Index

Type No.	Page	Type No.	Page
05NU41 to 05NU42	40	1N5338B to 1N5388B	145
1.5KE Series	171-172	1N5391 to 1N5399	18
10A01 to 10A07	21	1N5391G to 1N5399G	24
10ELS1 to 10ELS6	41	1N5400 to 1N5408	20
10KP Series	185-186	1N5400G to 1N5408G	24
10MQ040N	61	1N5415 to 1N5420	47
10MQ100N	61	1N5610 to 1N5613	168
11DF1 to 11DF4	53	1N5711	69
11DQ03 to 11DQ10	61	1N5802 to 1N5806	59
11E1 to 11E6	14	1N5802US to 1N5806US	59
11ES1 to 11ES2	14	1N5807 to 1N5811	56
15DF4 to 15DF8	43	1N5807US to 1N5811US	56
15KP Series	187-188	1N5817 to 1N5819	60
1A1 to 1A7	14	1N5817WB to 1N5819WB	71
1F1 to 1F7	39	1N5820 to 1N5822	63
1G1 to 1G7	22	1N5820S to 1N5822S	63
1H1G to 1H8G	51	1N5913A to 1N5956A	139
1N4001 to 1N4007	14	1N5913B to 1N5956B	139
1N4001G to 1N4007G	22	1N6263	69
1N4148 to 1N4154	25	1N6267 to 1N6303	169-170
1N4148S	25	1N6267A to 1N6303A	169-170
1N4148W	27	1N6267C to 1N6303C	169-170
1N4148WS	27	1N6267CA to 1N6303CA	169-170
1N4148WT	27	1N746A to 1N759A	98
1N4447 to 1N4454	25	1N914,A,B	25
1N4448W	27	1N914W	27
1N4531 to 1N4532	25	1N914WT	28
1N4728 to 1N4764	120	1N957B to 1N984B	99
1N4728A to 1N4764A	120	1R5JH45	44
1N4728AG to 1N4764AG	123	1R5JU41	44
1N4728C to 1N4764C	120	1S1585 to 1S1588	25
1N4728G to 1N4764G	123	1S1885 to 1S1888	17
1N4933 to 1N4937	42	1S20 to 1SB0	60
1N4933G to 1N4937G	49	1S2076A	25
1N4954 Series	146	1SMA4728A to 1SMA4764A	124
1N5221 to 1N5267	96	1SMA5913A to 1SMA5957A	136
1N5221B to 1N5267B	96	1SMA5913B to 1SMA5957B	136
1N5338A to 1N5388A	145	1SMB5913A to 1SMB5956A	140

Numerical Index

Type No.	Page	Type No.	Page
1SMB5913B to 1SMB5956B	140	ABR1500 to ABR1510	221
1SR124-100 to 1SR124-400	41	ABR1500W to ABR1510W	221
1SR139-100 to 1SR139-600	15	ABR2500 to ABR2510	221
1SR153-100 to 1SR153-400	41	ABR2500W to ABR2510W	221
1SR154-400 to 1SR154-600	15	ABR3500 to ABR3510	221
1SR35-100 to 1SR35-400	15	ABR3500W to ABR3510W	221
1SS106 to 1SS108	69	ABR5000 to ABR5010	221
1SS130 to 1SS133	25	ABR5000W to ABR5010W	221
1SS165 to 1SS166	69	ABR600 to ABR610	220
1SS176 to 1SS178	26	ABR800 to ABR810	2220
1SS181 to 1SS187	28	AG01 Series	53
1SS198 to 1SS199	69	AK03 to AK09	60
1SS226	28	AKBL400 to AKBL410	220
1SS270A	26	AM01A	22
1SS286	69	AP01C	39
1SS294	73	AR2500 to AR2512	34
1SS294	73	AR2500L to AR2512L	34
1SS352	27	AR3500 to AR3512	34
1SS355	27	AR3500L to AR3512L	34
1SS367	72	AR5000 to AR5012	34
1SS388	72	AR5000L to AR5012L	34
1SS88	69	AU01Series	39
21DQ09 - 21DQ10	61	AU02 Series	40
2EZ3.6D10 to 2EZ330D10	137	BA157 to BA159	42
2EZ3.6D5 to 2EZ330D5	137	BAS116	28
3.0SMCJ11 to 3.0SMCJ220A	175-176	BAS15	26
3.0SMCJ11C to 3.0SMCJ220CA	175-176	BAS16	28
30DF6	46	BAS16WS	27
30KP Series	191-192	BAS19 to BAS21	28
31DQ03 to 31DQ10	64	BAS216WS	27
3EZ3.9D10 to 3EZ200D10	141	BAS216WT	28
3EZ3.9D5 to 3EZ200D5	141	BAS316WS	27
3JH45	46	BAS321	27
3KE Series	177-178	BAS40/04/ 05/ 06	73
3TH41	32	BAS40W/04W/ 05W/ 06W	73
5KP Series	179-180	BAS521	28
6A05 to 6A10	20	BAS70-00 to BAS70-06	29
ABR1000 to ABR1010	220	BAS81 to BAS83	70

Numerical Index

Type No.	Page	Type No.	Page
BAS85 to BAS86	69	BY133	14
BAT400D	73	BY133G	22
BAT41 to BAT48	69	BY251 to BY255	20
BAT42W to BAT43W	71	BY296 to BY299	45
BAT42WS	71	BY396 to BY399	45
BAT42WS to BAT43WS	71	BY550-50 to BY550-1000	20
BAT42WT	71	BY8004 to BY8006	32
BAT43WS	71	BYD13D to BYD13M	35
BAT43WT	71	BYD17D to BYD17M	35
BAT46W	71	BYD33D to BYD33M	36
BAT54 Series.	73	BYD37D to BYD37M	37
BAT54W	71	BYD37DA to BYD37MA	37
BAT54WS	71	BYD57D to BYD57V	37
BAT54WT	71	BYD77A to BYD77G	38
BAT81 to BAT86	69	BYG10D to BYG10M	36
BAV10 to BAV21	26	BYG20D to BYG20J	37
BAV100 to BAV105	26	BYG24D to BYG24J	37
BAV19W to BAV21W	27	BYT52A to BYT52M	43
BAV19WS to BAV21WS	27	BYT56A to BYT56M	46
BAV23 Series	29	BYV26A to BYV26E	36
BAV70	29	BYV27-100 to BYV27-200	38
BAV99	29	BYV36A to BYV36E	36
BAW56	29	BYV95A to BYV95C	36
BAW62 to BAW76	26	BYV96D to BYV96E	36
BAX12 to BAX12A	36	BYW27-50 to BYW27-1000	14
BAX14 to BAX18	26	BYW32 to BYW36	44
BAY80	26	BYW54 to BYW56	35
BR1000 to BR1010	211	BYW95A to BYW95C	38
BR1500 to BR1510	212	BYW96D to BYW95E	36
BR1500W to BR1510W	212	BYX134GPL	35
BR2500 to BR2510	213	BYX134PL	35
BR2500W to BR2510W	213	BZG03 Series	142
BR3500 to BR3510	215	BZG04 Series	143
BR3500W to BR3510W	215	BZG05 Series	144
BR5000 to BR5010	215	BZV55B Series	101
BR5000W to BR5010W	215	BZV55C Series	101
BR600 to BR610	210	BZW04 Series	151-152
BR800 to BR810	211	BZW06 Series	161-162

Numerical Index

Type No.	Page	Type No.	Page
BZW50 Series	181	EM2 Series	17
BZX55B Series	100	EP01C	39
BZX55C Series	100	EPS Series	168
BZX79B Series	102	ERA15-01 to ERA15-10	15
BZX79C Series	102	ERA22-02 to ERA22-10	39
BZX85B Series	132	ERA32-01 to ERA32-02	53
BZX85C Series	132	ERA34-10	39
CN18A to CN18M	33	ERA81-004	60
CN25A to CN25M	33	ERA83-004 to ERA83-006	60
CN3A to CN3M	33	ERA84-009	60
CN5A to CN5M	33	ERB12-01 to ERB12-10	16
CN8A to CN8M	33	ERB38-04 to ERB06	41
D20XB20 to D20XB100	213	ERB43-02 to ERB43-08	39
D25XB20 to D25XB60	213	ERB44-02 to ERB44-10	41
D32P to D60P	224	ERB81-004	62
D3SB10 to D3SB80	210	ERB83-004 to ERB83-006	62
D3SBA10 to D3SBA80	210	ERB84-009	62
D3SBA100	210	ERC04-02 to ERC04-10	17
D5SBA10 to D5SBA60	210	ERC05-06 to ERC05-10	17
DB101 to DB107	218	ERC25-04 to ERC25-06	17
DB3	224	ERC81-004 to ERC81-006	63
DB4	224	ERC84-009	63
DF005M to DF10M	219	ERD07-13 to ERD07-15	18
DF005S to DF10S	218	ERD28-04 to ERD28-08	44
DF15005M to DF1510M	219	ES1 Series	40
DF15005S to DF1510S	219	ES1A to ES1M	54
DL201 to DL207	19	ES2A to ES2D	56
DL4001 to DL4007	23	ES2AA to ES2DA	56
DL4933 to DL4937	42	ES3A to ES3M	57
DR200 to DR210	19	ESAC25 Series	48
DR200G to DR210G	24	EU1 Series	31
EG01 Series	53	EU2 Series	41
EG1 Series	53	F1200A	48
EGP20A to EGP20D	55	F1200D	48
EK03 to EK04	61	FBR1000 to FBR1010	222
EL1 Series	55	FBR1500 to FBR1510	223
EM01 Series	15	FBR1500W to FBR1510W	223
EM1Series	15	FBR2500 to FBR2510	223

Numerical Index

Type No.	Page	Type No.	Page
FBR2500W to FBR2510W	223	GBPC6005 to GBPC610	216
FBR3500 to FBR3510	223	GBU4A to GBU4M	209
FBR3500W to FBR3510W	223	GBU6A-M Series,	209
FBR5000 to FBR5010	223	GBU8A to GBU8M	209
FBR5000W to FBR5010W	223	GF1A to GF1M	23
FBR600 to FBR610	222	GL41Y	23
FBR800 to FBR810	222	GLZ Series	103-104
FEP16AP to FEP16JP	58	GN13	22
FEP30AP to FEP30JP	58	GN1A to GN1M	22
FES16AT to FES16JT	58	GN2A to GN2M	24
FES8AT to FES8JT	58	GN3A to GN3M	24
FHVR1120	32	GNOA to GNOM	24
FKBL400 to FKBL410	222	GNTA to GNTM	24
FR101 to FR107-STR	42	GP02-20 to GP02-40	30
FR101G to FR107G-STR	49	GP10A to GP01Y	23
FR151 to FR157-STR	43	GP15A to GP15M	18
FR151G to FR157G-STR	49	GR15-G	32
FR201 to FR207-STR	45	GR1A to GR1M	49
FR201G to FR207G-STR	47	GR20-G	32
FR251 to FR257-STR	50	GR2A to GR2M	50
FR251G to FR257G-STR	45	GR3A to GR3M	50
FR301 to FR307-STR	50	GRN3 to GRN7	49
FR301G to FR307G-STR	46	GS1S	32
FR501 to FR507	50	HER101 to HER108	51
FR601 to FR607	47	HER151 to HER158	51
FR801 to FR805	47	HER201 to HER208	51
FST10120 to FST10200	67	HER251 to HER258	52
FST20120 to FST20200	68	HER301 to HER308	52
FST31120 to FST31200	68	HER501 to HER508	52
FTB2000AA to FTB2000AG	48	HER601 to HER608	52
FTB2000KA to FTB2000KG	48	HFR125 to HFR130	32
G105 to G270	224	HFR180	321
G105C to G270C	224	HSS100 to HSS102	69
GBJ2500 to GBJ2510	214	HUF150	32
GBPC15005 to GBPC1510	216	HVR112 to HVR120	30
GBPC25005 to GBPC2510	217	HVR125 to HVR180	30
GBPC25005W to GBPC2510	217	HVR230 to HVR250	30
GBPC35005 to GBPC3510	217	HVR312 to HVR320	31

Numerical Index

Type No.	Page	Type No.	Page
HVR3509	30	MBR0520L	71
HVR3509H	30	MBR0530	71
HVR4509	31	MBR0540	71
HVR512 to HVR520	31	MBR1035 to MBR1060	65
HZKxxL Series	87-88	MBR150 to MBR160	61
HZKxxLL Series	76	MBR1635 to MBR1660	65
HZSxx Series	77	MBR1660CT to MBR16100CT	65
HZSxxL Series	89-90	MBR20200CT	68
HZSxxLL Series	78	MBR2035CT to MBR2060CT	60
HZxx Series	105	MBR2535CT to MBR2560CT	66
HZxxL Series	86	MBR3035PT to MBR3060PT	66
KBL400 to KBL410	208	MBR3045CT	66
KBL400G to KBL410G	216	MBR320 to MBR360	63
KBP200 to KBP210	208	MBR4035PT to MBR4060PT	66
KBPC1000 to KBPC1010	212	MBR735 to MBR760	64
KBPC1500 to KBPC1510	213	MBRB1045	65
KBPC2500 to KBPC2510	214	MBRB1545	65
KBPC3500 to KBPC3510	215	MBRB3045CT	66
KBPC5000 to KBPC5010	215	MBRF16H35 to MBRF16H60	65
KBU4A to KBU4M	208	MBRF20200CT	68
KBU6A to KBU6M	208	MBRS1100	67
KBU8A to KBU8M	209	MBRS120T3	67
LCE Series	198-199	MBRS130LT3	67
LL101A to LL101C	70	MBRS140	67
LL103A to LL103C	70	MBRS240LT3G	67
LL41 to LL48	69	MBRS3100	67
LL4148 to LL4153	26	MBRS3200	67
LL4448	26	MBRS3201	67
LL5711	69	MBRS330T3	67
LL5817 to LL5819	60	MBRS340T3	67
LL6263	69	MBRS360T3	67
LMN1A to LMN1M	22	MBRS4201	67
LMR1A to LMR1M	49	MM1Z2V0B Series	107
LMS1A to LMS1M	59	MM1Z2V4 Series	106
MA700 to MA700A	70	MM1Z4678 Series	108
MB1M to MB10M	128	MM1Z52xxB Series	109
MB1S to MB10S	128	MM3Z2V0 Series	79
MBR0520	71	MM3Z2V0B Series	80

Numerical Index

Type No.	Page	Type No.	Page
MM5Z2B4 Series	75	PTZ Series	125
MM5Z2V4 Series,	74	R15KP Series	189-190
MMBD4148 Series	29	R2G to R2M	35
MMBD7000	29	R2KY	35
MMBD914	29	RB441Q-40	70
MMBZ5221B Series	85	RB501V-40	72
MMZJ Series	110	RB520S-30	72
MR2500 to MR2512	34	RB521G-30	72
MR2500L to MR2512L	34	RB521S-30	72
MR2535 to MR2540	206	RB521S-40	72
MR2535L to MR2540L	206	RB721Q-40	70
MR3230	206	RB751S-40	72
MR3501 to MR3512	34	RBV1000 to RBV1010	211
MR3501L to MR3512L	34	RBV1000D to RBV1010D	212
MR5000 to MR5012	34	RBV1500 to RBV1510	212
MR5000L to MR5012L	34	RBV1500D to RBV1510D	212
MR750 to MR756	34	RBV2500 to RBV2510	213
MR850 to MR858	46	RBV2500D to RBV2510D	214
MRA4003 to MRA4007	18	RBV3500 to RBV3510	215
MS10180 to MS10200	67	RBV401 to RBV410	210
MS16180 to MS16200	68	RBV5000 to RBV5010	215
MS20180 to MS20200	68	RBV600 to RBV610	210
MTZJ Series	110	RBV600D to RBV610D	211
MUR120 to MUR160	53	RBV800 to RBV810	211
MUR1520/S	58	RBV800D to RBV810D	211
MUR3020WT to MUR3040WT	59	RD2.0E to RD39E	112-114
MZ1110 to MZ1200	122	RD2.0ES to RD39ES	91-93
MZ4728 to MZ4764	122	RD2.0F to RD82F	126-128
MZ55C3V0 to MZ55C200	111	RD2A	51
MZ5913A to MZ5956A	135	RD4.7JS to RD39JS	94-95
MZ5913B to MZ5956B	135	RG10 Series	53
MZ85C3V0 to MZ85C200	133	RG2 Series	55
NS8AT to NS8MT	21	RG4 Series	55
P4KE Series	153-154	RGF1A to RGF1M	42
P600A to P600M	21	RGL1A to RGL1M	43
P6KE Series	163-164	RGP02-12E to RGP02-20E	32
P6SMB Series	165	RGP10A to RGP10M	41
P800A to P800K	21	RGP15A to RG15M	43

Numerical Index

Type No.	Page	Type No.	Page
RGP20A to RGP20J	45	SB220 to SB2B0	62
RGP30A to RGP30M	47	SB220S to SB2B0S	62
RH1 Series	40	SB320 to SB3B0	63
RHRP660F	59	SB320S to SB3B0S	63
RK13 to RK19	61	SB5150 to SB5200	64
RK33 to RK39	62	SB520 to SB5B0	64
RK43 to RK49	64	SB520S to SB5B0S	64
RL251 to RL257	19	SBL1030 to SBL1040	64
RLZ Series	115	SBL1030CT to SBL1640CT	65
RM10 Series	18	SBL2030PT to SBL2040PT	66
RM11A to RM11C	17	SBL3030PT to SBL3040PT	66
RM2 Series	17	SBL4030PT to SBL4040PT	66
RM25	35	SBO20 to SBOB0	62
RM3 Series	19	SBT20 to SBTB0	63
RM4 Series	19	SD101A to SD101C	70
RS1A to RS1M	42	SD101AW - CW	71
RS3A to RS3K	46	SD101AWS to SD101CWS	71
RU1 Series	39	SD103A to SD103C	70
RU2 Series	43	SD103AW - CW	71
RU3 Series	44	SD103AWS to SD103CWS	71
RU4 Series	44	SD1045	65
S15VB20 to S15VB60	213	SD1545	65
S1A to S1M	16	SD1645	65
S1T	30	SDB412WS	72
S1ZB20 to S1ZB80	218	SE1A to SE1M	51
S25VB20 to S25VB60	214	SE2A to SE2M	51
S2A to S2M	18	SE3A to SE3M	52
S2L20U	59	SE5A to SE5M	52
S5277B to S5277N	16	SEOA to SEOM	51
S5295B to S5295J	40	SETA to SETM	52
S5566B to S5566N	16	SF11 to SF19	54
S5688B to S5688N	16	SF11G to SF19G	59
S5KP Series	182-183	SF21 to SF29	56
SA Series	159-160	SF31 to SF39	57
SAC Series	195	SF51 to SF59	57
SB0015-03A	70	SF61 to SF69	57
SB0030-01A	70	SF61G to SF69G	59
SB120 to SB1B0	60	SFO1 to SFO9	55

Numerical Index

Type No.	Page	Type No.	Page
SFT1 to SFT9	56	SMCJLCE6.5 to SMCJLCE170A	200-201
SHV- 02JN	30	SMF5.0A Series	150
SHV- 03	31	SML4728 to SML4764	130
SHV- 03S	31	SML4728A to SML4764A	130
SHV- 05EN	31	SMLJ-LCxx Series	202-203
SHV- 06EN	31	SN13	14
SHV- 06JN	30	SN1A to SN1M	14
SHV- 08EN	31	SN1N to SN1R	30
SHV-01JN	30	SN21 to SN25	20
SHV-02	31	SN2A to SN2M	19
SHV-04	30	SN3A to SN3M	20
SHV-05J	30	SN3AS to SN3MS	20
SHV-06HK	30	SN3N to SN3R	31
SK1045	65	SN5A to SN5M	20
SK12 to SK1B	60	SN5N to SN5R	31
SK1545	65	SNOA to SNOM	18
SK22 to SK2B	62	SNWA to SNWM	14
SK22S to SK2BS	62	SR1A to SR1M	42
SK32 to SK3B	63	SR1N - SR1R	32
SK32A to SK3BA	63	SR220 to SR2100	62
SK32S to SK3BS	63	SR26 to SR29	45
SK52 to SK5B	64	SR2A to SR2M	45
SK52S to SK5BS	6	SR36 to SR39	45
SKN0 to SKN2	63	SR3A to SR3M	46
SKN0S to SKN2S	63	SR520 to SR560	64
SKN7 to SKN9	60	SRA7 to SRA9	42
SL12 to SL13	61	SRN3 to SRN7	42
SM8S Series	184	SROA to SROM	43
SMAJ5.0 Series.	157-158	SRR0 to SRR6	46
SMAZ Series	129	SRTA to SRTM	45
SMBJ5.0 Series.	166-167	SS1A to SS1M	54
SMBJ5338A to SMBJ5388A	147	SS2A to SS2M	56
SMBJ5338B to SMBJ5388B	147	SS3A to SS3M	57
SMBJ-LC5.0 to SMBJ-LC188A	196-197	SS5A to SS5M	57
SMC1200D	50	SSOA to SSOM	55
SMC1520	59	SSTA to SSTM	56
SMC2000D	50	STB6 Series	163-164
SMCJ5.0 Series.	173-174	STBB Series	151-152

Numerical Index

Type No.	Page
STBK Series	171-172
STBN Series	169-170
STBP Series	153-154
STBS Series	159-160
STU6 Series	163-164
STUB Series	151-152
STUK Series	171-172
STUN Series	169-170
STUP Series	153-154
STUS Series	159-160
SZ10 Series	120
SZ15 Series	120
SZ25 Series	132
SZ30 Series	139
SZ35 Series	139
SZ40 Series	137
SZ45 Series	137
SZ50 Series	141
SZ55 Series	141
SZ60 Series	145
SZ65 Series	145
TGL34 Series	148-149
TGL41 Series	155-156
TPSMC Series	207
TVR1B to TVR1J	40
TVR2B to TVR2J	40
TZMC Series	116
TZS4678 to TZS4717	97
UF1001 to UF1007	54
UF4001 to UF4007	54
UF5404 to UF5408	56
UG2A to UG2D	55
ULCE Series	204-205
W005G to W10G	216
Z043 to Z0200	118
Z043A to Z0200A	118
Z043B to Z0200B	118
Z1110 to Z1300	120
Z1110A to Z1300A	120
Z1T-100B Series	121
ZM4728A to ZM4764A	123
ZMM2.4 to ZMM75	117
ZMM5225 to ZMM5267	96
ZMM5225B to ZMM5267B	96
ZMU100 to ZMU180	131
ZMY Series	131
ZPD Series	119
ZPY Series	134
ZY Series	138

Silicon Rectifier Diodes

The plastic material carries U/L recognition 94V-0.

Type No.		Max. Average Forward Rectified Current		Max. Repetitive Peak Reverse Voltage	Max. Repetitive Peak Forward Current	Max. Peak Forward Surge Current	Max. Forward Voltage Drop at Ta = 25°C		Max. Reverse Current at Ta = 25°C
		$I_{F(AV)}$ @ Ta		V_{RRM}	I_{FRM}	I_{FSM}	V_F @ I_F		I_R
Axial Lead	SMD	(A)	(°C)	(V)	(A)	(A)	(V)	(A)	(μA)
1A1 Series, 1 A, Case Type: R-1									
1A1		1.0	50	50	-	30	1.1	1.0	5.0
1A2		1.0	50	100	-	30	1.1	1.0	5.0
1A3		1.0	50	200	-	30	1.1	1.0	5.0
1A4		1.0	50	400	-	30	1.1	1.0	5.0
1A5		1.0	50	600	-	30	1.1	1.0	5.0
1A6		1.0	50	800	-	30	1.1	1.0	5.0
1A7		1.0	50	1000	-	30	1.1	1.0	5.0
1N4001/SN1A Series, 1 A, Case Type: DO-41/SMA									
1N4001	**SN1A**	1.0	75	50	10	30	1.0	1.0	5.0
1N4002	**SN1B**	1.0	75	100	10	30	1.0	1.0	5.0
1N4003	**SN1D**	1.0	75	200	10	30	1.0	1.0	5.0
1N4004	**SN1G**	1.0	75	400	10	30	1.0	1.0	5.0
1N4005	**SN1J**	1.0	75	600	10	30	1.0	1.0	5.0
1N4006	**SN1K**	1.0	75	800	10	30	1.0	1.0	5.0
1N4007	**SN1M**	1.0	75	1000	10	30	1.0	1.0	5.0
BY133	**SN13**	1.0	75	1300	10	30	1.0	1.0	5.0
BYW27/SNWA Series, 1 A, Case Type: DO-41/SMA									
BYW27-50	**SNWA**	1.0	70	50	10	50	1.0	1.0	0.2
BYW27-100	**SNWB**	1.0	70	100	10	50	1.0	1.0	0.2
BYW27-200	**SNWD**	1.0	70	200	10	50	1.0	1.0	0.2
BYW27-400	**SNWG**	1.0	70	400	10	50	1.0	1.0	0.2
BYW27-600	**SNWJ**	1.0	70	600	10	50	1.0	1.0	0.2
BYW27-800	**SNWK**	1.0	70	800	10	50	1.0	1.0	0.2
BYW27-1000	**SNWM**	1.0	70	1000	10	50	1.0	1.0	0.2
11E1 Series, 1 A, Case Type: DO-41									
11E1		1.0	40	100	-	45	1.0	1.0	50
11E2		1.0	40	200	-	45	1.0	1.0	50
11E4		1.0	40	400	-	45	1.0	1.0	10
11E6		1.0	40	600	-	45	1.0	1.0	10
11ES1 Series, 1 A, Case Type: DO-41									
11ES1		1.0	40	100	-	45	1.0	1.0	50
11ES2		1.0	40	200	-	45	1.0	1.0	50

Silicon Rectifier Diodes

The plastic material carries U/L recognition 94V-0.

Type No.		Max. Average Forward Rectified Current		Max. Repetitive Peak Reverse Voltage	Max. Repetitive Peak Forward Current	Max. Peak Forward Surge Current	Max. Forward Voltage Drop at Ta = 25°C		Max. Reverse Current at Ta = 25°C
		$I_{F(AV)}$ @ Ta		V_{RRM}	I_{FRM}	I_{FSM}	V_F @ I_F		I_R
Axial Lead	SMD	(A)	(°C)	(V)	(A)	(A)	(V)	(A)	(μA)
1SR35-100 Series, 1 A, Case Type: DO-41									
1SR35-100		1.0	50	100	-	30	1.1	1.0	10
1SR35-200		1.0	50	200	-	30	1.1	1.0	10
1SR35-400		1.0	50	400	-	30	1.1	1.0	10
1SR139-100 Series, 1 A, Case Type: DO-41									
1SR139-100		1.0	25	100	-	40	1.1	1.0	10
1SR139-200		1.0	25	200	-	40	1.1	1.0	10
1SR139-400		1.0	25	400	-	40	1.1	1.0	10
1SR139-600		1.0	25	600	-	40	1.1	1.0	10
1SR154-400 Series, 1 A, Case Type: SMA									
	1SR154-400	1.0	25	400	-	30	1.1	1.0	10
	1SR154-600	1.0	25	600	-	30	1.1	1.0	10
EM01 Series, 1 A, Case Type: DO-41									
EM01		1.0	25	400	-	45	0.97	1.0	10
EM01A		1.0	25	600	-	45	0.97	1.0	10
EM01Z		1.0	25	200	-	45	0.97	1.0	10
EM1 Series, 1 A, Case Type: DO-41									
EM1		1.0	25	400	-	45	0.97	1.0	10
EM1A		1.0	25	600	-	45	0.97	1.0	10
EM1B		1.0	25	800	-	35	0.97	1.0	20
EM1C		1.0	25	1000	-	35	0.97	1.0	20
ERA15-01 Series, 1 A, Case Type: DO-41									
ERA15-01		1.0	40	100	-	40	1.1	2.0	10
ERA15-02		1.0	40	200	-	40	1.1	2.0	10
ERA15-04		1.0	40	400	-	40	1.1	2.0	10
ERA15-06		1.0	40	600	-	40	1.1	2.0	10
ERA15-08		1.0	25	800	-	40	1.1	2.0	10
ERA15-10		1.0	25	1000	-	40	1.1	2.0	10

Silicon Rectifier Diodes

The plastic material carries U/L recognition 94V-0.

Type No.		Max. Average Forward Rectified Current		Max. Repetitive Peak Reverse Voltage	Max. Repetitive Peak Forward Current	Max. Peak Forward Surge Current	Max. Forward Voltage Drop at Ta = 25°C		Max. Reverse Current at Ta = 25°C
		$I_{F(AV)}$ @ Ta		V_{RRM}	I_{FRM}	I_{FSM}	V_F @ I_F		I_R
Axial Lead	SMD	(A)	(°C)	(V)	(A)	(A)	(V)	(A)	(μA)
ERB12-01 Series, 1 A, Case Type: DO-41									
ERB12-01		1.0	60	100	-	60	1.1	2.0	10
ERB12-02		1.0	60	200	-	60	1.1	2.0	10
ERB12-04		1.0	60	400	-	60	1.1	2.0	10
ERB12-06		1.0	60	600	-	60	1.1	2.0	10
ERB12-10		1.0	25	1000	-	50	1.1	2.0	10
MRA4003 Series, 1 A, Case Type: SMA									
	MRA4003	1.0	150 (T_L)	300	-	30	1.18	2.0	10
	MRA4004	1.0	150 (T_L)	400	-	30	1.18	2.0	10
	MRA4005	1.0	150 (T_L)	600	-	30	1.18	2.0	10
	MRA4006	1.0	150 (T_L)	800	-	30	1.18	2.0	10
	MRA4007	1.0	150 (T_L)	1000	-	30	1.18	2.0	10
S1A Series, 1 A, Case Type: SMA									
	S1A	1.0	110 (T_L)	50	-	40	1.1	1.0	1.0
	S1B	1.0	110 (T_L)	100	-	40	1.1	1.0	1.0
	S1D	1.0	110 (T_L)	200	-	40	1.1	1.0	1.0
	S1G	1.0	110 (T_L)	400	-	40	1.1	1.0	1.0
	S1J	1.0	110 (T_L)	600	-	40	1.1	1.0	1.0
	S1K	1.0	100 (T_L)	800	-	30	1.1	1.0	5.0
	S1M	1.0	100 (T_L)	1000	-	30	1.1	1.0	5.0
S5277 Series, 1.0 A, Case Type: DO-41									
S5277B		1.0	25	100	-	55	1.2	1.0	10
S5277G		1.0	25	400	-	55	1.2	1.0	10
S5277J		1.0	25	600	-	33	1.2	1.0	10
S5277N		1.0	25	1000	-	33	1.2	1.0	10
S5566B Series, 1 A, Case Type: DO-41									
S5566B		1.0	25	100	-	45	1.2	1.0	10
S5566G		1.0	25	400	-	45	1.2	1.0	10
S5566J		1.0	25	600	-	30	1.2	1.0	10
S5566N		1.0	25	1000	-	30	1.2	1.0	10
S5688B Series, 1 A, Case Type: R-1									
S5688B		1.0	30	100	-	45	1.2	1.0	10
S5688G		1.0	30	400	-	45	1.2	1.0	10
S5688J		1.0	30	600	-	30	1.2	1.0	10
S5688N		1.0	30	1000	-	30	1.2	1.0	10

Silicon Rectifier Diodes

The plastic material carries U/L recognition 94V-0.

Type No.		Max. Average Forward Rectified Current		Max. Repetitive Peak Reverse Voltage	Max. Repetitive Peak Forward Current	Max. Peak Forward Surge Current	Max. Forward Voltage Drop at Ta = 25°C		Max. Reverse Current at Ta = 25°C
		$I_{F(AV)}$ @ Ta		V_{RRM}	I_{FRM}	I_{FSM}	V_F @ I_F		I_R
Axial Lead	SMD	(A)	(°C)	(V)	(A)	(A)	(V)	(A)	(μA)
1S1885 Series, 1 A, Case Type: D2									
1S1885		1.0	65	100	-	60	1.2	1.5	10
1S1886		1.0	65	200	-	60	1.2	1.5	10
1S1887		1.0	65	400	-	60	1.2	1.5	10
1S1888		1.0	65	600	-	60	1.2	1.5	10
EM2 Series, 1.2 A, Case Type: DO-41									
EM2		1.2	25	400	-	80	0.92	1.2	10
EM2A		1.2	25	600	-	80	0.92	1.2	10
EM2B		1.2	25	800	-	80	0.92	1.2	10
ERC04-02 Series, 1.2 A, Case Type: D2A									
ERC04-02		1.2	60	200	-	100	1.1	4.0	10
ERC04-04		1.2	60	400	-	100	1.1	4.0	10
ERC04-06		1.2	60	600	-	100	1.1	4.0	10
ERC04-10		1.2	60	1000	-	100	1.1	4.0	10
ERC05-06 Series, 1.2 A, Case Type: D2									
ERC05-06		1.2	60	600	-	100	1.00	4.0	10
ERC05-08		1.2	60	800	-	100	1.00	4.0	10
ERC05-10		1.2	60	1000	-	100	1.00	4.0	10
ERC25-04 Series, 1.2 A, Case Type: D2									
ERC25-04		1.2	40	400	-	50	1.10	1.2	10
ERC25-06		1.2	40	600	-	50	1.10	1.2	10
RM11A Series, 1.2 A, Case Type: D2									
RM11A		1.2	70	600	15	100	0.92	1.5	10
RM11B		1.2	70	800	15	100	0.92	1.5	10
RM11C		1.2	70	1000	15	100	0.92	1.5	10
RM2 Series, 1.2 A, Case Type: D2A									
RM2Z		1.2	70	200	15	100	0.91	1.5	10
RM2		1.2	70	400	15	100	0.91	1.5	10
RM2A		1.2	70	600	15	100	0.91	1.5	10
RM2B		1.2	70	800	15	100	0.91	1.5	10
RM2C		1.2	70	1000	15	100	0.91	1.5	10

Silicon Rectifier Diodes

The plastic material carries U/L recognition 94V-0.

Type No.		Max. Average Forward Rectified Current		Max. Repetitive Peak Reverse Voltage	Max. Repetitive Peak Forward Current	Max. Peak Forward Surge Current	Max. Forward Voltage Drop at Ta = 25°C		Max. Reverse Current at Ta = 25°C
		$I_{F(AV)}$ @ Ta		V_{RRM}	I_{FRM}	I_{FSM}	V_F @ I_F		I_R
Axial Lead	SMD	(A)	(°C)	(V)	(A)	(A)	(V)	(A)	(μA)
RM10 Series, 1.2 - 1.5 A, Case Type: D2									
RM10		1.2	70	400	15	150	0.91	1.5	10
RM10A		1.2	70	600	15	150	0.91	1.5	10
RM10B		1.2	70	800	15	150	0.91	1.5	10
RM10Z		1.5	70	200	15	120	0.91	1.5	10
1N5391/SNOA Series, 1.5 A, Case Type: DO-41/SMA									
1N5391	**SNOA**	1.5	70	50	10	50	1.1	1.5	5.0
1N5392	**SNOB**	1.5	70	100	10	50	1.1	1.5	5.0
1N5393	**SNOD**	1.5	70	200	10	50	1.1	1.5	5.0
1N5394	**SNOE**	1.5	70	300	10	50	1.1	1.5	5.0
1N5395	**SNOG**	1.5	70	400	10	50	1.1	1.5	5.0
1N5396	**SNOH**	1.5	70	500	10	50	1.1	1.5	5.0
1N5397	**SNOJ**	1.5	70	600	10	50	1.1	1.5	5.0
1N5398	**SNOK**	1.5	70	800	10	50	1.1	1.5	5.0
1N5399	**SNOM**	1.5	70	1000	10	50	1.1	1.5	5.0
GP15A Series, 1.5 A, Case Type: D2									
GP15A		1.5	55	50	-	50	1.10	1.5	5.0
GP15B		1.5	55	100	-	50	1.10	1.5	5.0
GP15D		1.5	55	200	-	50	1.10	1.5	5.0
GP15G		1.5	55	400	-	50	1.10	1.5	5.0
GP15J		1.5	55	600	-	50	1.10	1.5	5.0
GP15K		1.5	55	800	-	50	1.10	1.5	5.0
GP15M		1.5	55	1000	-	50	1.10	1.5	5.0
S2A Series, 1.5 A, Case Type: SMB									
	S2A	1.5	75 (T_L)	50	-	50	1.15	1.5	1.0
	S2B	1.5	75 (T_L)	100	-	50	1.15	1.5	1.0
	S2D	1.5	75 (T_L)	200	-	50	1.15	1.5	1.0
	S2G	1.5	75 (T_L)	400	-	50	1.15	1.5	1.0
	S2J	1.5	75 (T_L)	600	-	50	1.15	1.5	1.0
	S2K	1.5	75 (T_L)	800	-	50	1.15	1.5	1.0
	S2M	1.5	75 (T_L)	1000	-	50	1.15	1.5	1.0
ERD07-13 Series, 1.5 A, Case Type: DO-201AD									
ERD07-13		1.5	125(T_L)	1300	-	50	1.2	4.0	10
ERD07-15		1.5	125(T_L)	1500	-	50	1.2	4.0	10

Silicon Rectifier Diodes

The plastic material carries U/L recognition 94V-0.

Type No.		Max. Average Forward Rectified Current		Max. Repetitive Peak Reverse Voltage	Max. Repetitive Peak Forward Current	Max. Peak Forward Surge Current	Max. Forward Voltage Drop at Ta = 25°C		Max. Reverse Current at Ta = 25°C
		$I_{F(AV)}$ @ Ta		V_{RRM}	I_{FRM}	I_{FSM}	V_F @ I_F		I_R
Axial Lead	SMD	(A)	(°C)	(V)	(A)	(A)	(V)	(A)	(μA)
RM4 Series, 1.7 A, Case Type: DO-201AD									
RM4Y		1.7	40	100	-	150	0.95	3.0	10
RM4Z		1.7	40	200	-	150	0.95	3.0	10
RM4		1.7	40	400	-	150	0.95	3.0	10
DL201 Series, 2 A, Case Type: D2									
DL201		2.0	50	50	-	75	1.0	2.0	5.0
DL202		2.0	50	100	-	75	1.0	2.0	5.0
DL203		2.0	50	200	-	75	1.0	2.0	5.0
DL204		2.0	50	400	-	75	1.0	2.0	5.0
DL205		2.0	50	600	-	75	1.0	2.0	5.0
DL206		2.0	50	800	-	75	1.0	2.0	5.0
DL207		2.0	50	1000	-	75	1.0	2.0	5.0
DR200/SN2A Series, 2 A, Case Type: D2/SMB									
DR200	**SN2A**	2.0	50	50	15	75	1.0	2.0	5.0
DR201	**SN2B**	2.0	50	100	15	75	1.0	2.0	5.0
DR202	**SN2D**	2.0	50	200	15	75	1.0	2.0	5.0
DR204	**SN2G**	2.0	50	400	15	75	1.0	2.0	5.0
DR206	**SN2J**	2.0	50	600	15	75	1.0	2.0	5.0
DR208	**SN2K**	2.0	50	800	15	75	1.0	2.0	5.0
DR210	**SN2M**	2.0	50	1000	15	75	1.0	2.0	5.0
RL251 Series, 2.5 A, Case Type: D2A									
RL251		2.5	75	50	-	150	1.1	2.5	5
RL252		2.5	75	100	-	150	1.1	2.5	5
RL253		2.5	75	200	-	150	1.1	2.5	5
RL254		2.5	75	400	-	150	1.1	2.5	5
RL255		2.5	75	600	-	150	1.1	2.5	5
RL256		2.5	75	800	-	150	1.1	2.5	5
RL257		2.5	75	1000	-	150	1.1	2.5	5
RM3 Series, 2.5 A, Case Type: DO-201AD									
RM3		2.5	50	400	-	150	0.95	2.5	10
RM3A		2.5	50	600	-	150	0.95	2.5	10
RM3B		2.5	50	800	-	150	0.95	2.5	10

Silicon Rectifier Diodes

The plastic material carries U/L recognition 94V-0.

Type No.		Max. Average Forward Rectified Current		Max. Repetitive Peak Reverse Voltage	Max. Repetitive Peak Forward Current	Max. Peak Forward Surge Current	Max. Forward Voltage Drop at Ta = 25°C		Max. Reverse Current at Ta = 25°C
		$I_{F(AV)}$ @ Ta		V_{RRM}	I_{FRM}	I_{FSM}	V_F @ I_F		I_R
Axial Lead	SMD	(A)	(°C)	(V)	(A)	(A)	(V)	(A)	(μA)
BY251/SN21 Series, 3 A, Case Type: DO-201AD/SMC									
BY251	**SN21**	3.0	50	200	20	100	1.1	3.0	20
BY252	**SN22**	3.0	50	400	20	100	1.1	3.0	20
BY253	**SN23**	3.0	50	600	20	100	1.1	3.0	20
BY254	**SN24**	3.0	50	800	20	100	1.1	3.0	20
BY255	**SN25**	3.0	50	1300	20	100	1.1	3.0	20
1N5400 /SN3A Series, 3 A, Case Type: DO-201AD/SMC									
1N5400	**SN3A**	3.0	75	50	30	200	1.0	3.0	5.0
1N5401	**SN3B**	3.0	75	100	30	200	1.0	3.0	5.0
1N5402	**SN3D**	3.0	75	200	30	200	1.0	3.0	5.0
1N5404	**SN3G**	3.0	75	400	30	200	1.0	3.0	5.0
1N5406	**SN3J**	3.0	75	600	30	200	1.0	3.0	5.0
1N5407	**SN3K**	3.0	75	800	30	200	1.0	3.0	5.0
1N5408	**SN3M**	3.0	75	1000	30	200	1.0	3.0	5.0
SN3AS Series, 3.0 A, Case Type: SMB									
	SN3AS	3.0	75	50	-	200	1.2	3.0	5.0
	SN3BS	3.0	75	100	-	200	1.2	3.0	5.0
	SN3DS	3.0	75	200	-	200	1.2	3.0	5.0
	SN3GS	3.0	75	400	-	200	1.2	3.0	5.0
	SN3JS	3.0	75	600	-	200	1.2	3.0	5.0
	SN3KS	3.0	75	800	-	200	1.2	3.0	5.0
	SN3MS	3.0	75	1000	-	200	1.2	3.0	5.0
BY550/SN5A Series, 5 A, Case Type: DO-201AD/SMC									
BY550-50	**SN5A**	5.0	60	50	40	300	1.1	5.0	20
BY550-100	**SN5B**	5.0	60	100	40	300	1.1	5.0	20
BY550-200	**SN5D**	5.0	60	200	40	300	1.1	5.0	20
BY550-400	**SN5G**	5.0	60	400	40	300	1.1	5.0	20
BY550-600	**SN5J**	5.0	60	600	40	300	1.1	5.0	20
BY550-800	**SN5K**	5.0	60	800	40	300	1.1	5.0	20
BY550-1000	**SN5M**	5.0	60	1000	40	300	1.1	5.0	20
6A05 Series, 6 A, Case Type: D6									
6A05		6.0	60	50	-	400	0.95	6.0	5.0
6A1		6.0	60	100	-	400	0.95	6.0	5.0
6A2		6.0	60	200	-	400	0.95	6.0	5.0
6A4		6.0	60	400	-	400	0.95	6.0	5.0
6A6		6.0	60	600	-	400	0.95	6.0	5.0
6A8		6.0	60	800	-	400	0.95	6.0	5.0
6A10		6.0	60	1000	-	400	1.00	6.0	5.0

Silicon Rectifier Diodes

The plastic material carries U/L recognition 94V-0.

Type No.		Max. Average Forward Rectified Current		Max. Repetitive Peak Reverse Voltage	Max. Repetitive Peak Forward Current	Max. Peak Forward Surge Current	Max. Forward Voltage Drop at Ta = 25°C		Max. Reverse Current at Ta = 25°C
		$I_{F(AV)}$ @ Ta		V_{RRM}	I_{FRM}	I_{FSM}	V_F @ I_F		I_R
Axial Lead	SMD	(A)	(°C)	(V)	(A)	(A)	(V)	(A)	(μA)
P600A Series, 6 A, Case Type: D6									
P600A		6.0	60	50	-	400	0.9	6.0	5.0
P600B		6.0	60	100	-	400	0.9	6.0	5.0
P600D		6.0	60	200	-	400	0.9	6.0	5.0
P600G		6.0	60	400	-	400	0.9	6.0	5.0
P600J		6.0	60	600	-	400	0.9	6.0	5.0
P600K		6.0	60	800	-	400	0.9	6.0	5.0
P600M		6.0	60	1000	-	400	1.0	6.0	5.0
P800A Series, 8 A, Case Type: D6									
P800A		8.0	50	50	-	400	1.0	8.0	5.0
P800B		8.0	50	100	-	400	1.0	8.0	5.0
P800D		8.0	50	200	-	400	1.0	8.0	5.0
P800G		8.0	50	400	-	400	1.0	8.0	5.0
P800J		8.0	50	600	-	400	1.0	8.0	5.0
P800K		8.0	50	800	-	400	1.0	8.0	5.0
NS8AT Series, 8 A, Case Type: TO-220AC									
NS8AT		8.0	100(Tc)	50	-	175	1.1	8.0	10
NS8BT		8.0	100(Tc)	100	-	175	1.1	8.0	10
NS8DT		8.0	100(Tc)	200	-	175	1.1	8.0	10
NS8GT		8.0	100(Tc)	400	-	175	1.1	8.0	10
NS8JT		8.0	100(Tc)	600	-	175	1.1	8.0	10
NS8KT		8.0	100(Tc)	800	-	175	1.1	8.0	10
NS8MT		8.0	100(Tc)	1000	-	175	1.1	8.0	10
10A01 Series, 10 A, Case Type: D6									
10A01		10	50	50	-	600	1.3	10	10
10A02		10	50	100	-	600	1.3	10	10
10A03		10	50	200	-	600	1.3	10	10
10A04		10	50	400	-	600	1.3	10	10
10A05		10	50	600	-	600	1.3	10	10
10A06		10	50	800	-	600	1.3	10	10
10A07		10	50	1000	-	600	1.3	10	10





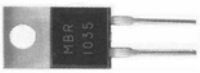



Glass Passivated Rectifier Diodes

The plastic material carries U/L recognition 94V-0.

Type No.		Max. Average Forward Rectified Current		Max. Repetitive Peak Reverse Voltage	Max. Repetitive Peak Forward Current	Max. Peak Forward Surge Current	Max. Forward Voltage Drop at Ta=25°C		Max. Reverse Current at Ta=25°C
		$I_{F(AV)}$ @ Ta		V_{RRM}	I_{FRM}	I_{FSM}	V_F @ I_F		I_R
Axial Lead	SMD	(A)	(°C)	(V)	(A)	(A)	(V)	(A)	(μA)
GL34A Series, 0.5 A, Case Type: Mini MELF (Plastic)									
GL34A		0.5	75(T_T)	50	-	10	1.2	0.5	5.0
GL34B		0.5	75(T_T)	100	-	10	1.2	0.5	5.0
GL34D		0.5	75(T_T)	200	-	10	1.2	0.5	5.0
GL34G		0.5	75(T_T)	400	-	10	1.2	0.5	5.0
GL34J		0.5	75(T_T)	600	-	10	1.3	0.5	5.0
1G1 Series, 1 A, Case Type: R-1									
1G1		1.0	50	50	-	30	1.1	1.0	5.0
1G2		1.0	50	100	-	30	1.1	1.0	5.0
1G3		1.0	50	200	-	30	1.1	1.0	5.0
1G4		1.0	50	400	-	30	1.1	1.0	5.0
1G5		1.0	50	600	-	30	1.1	1.0	5.0
1G6		1.0	50	800	-	30	1.1	1.0	5.0
1G7		1.0	50	1000	-	30	1.1	1.0	5.0
AM01A, 1 A, Case Type: M1A									
AM01A		1.0	25	600	-	35	0.98	1.0	10
LMN1A Series, 1 A, Case Type: M1A									
LMN1A		1.0	50	50	-	30	1.0	1.0	5.0
LMN1B		1.0	50	100	-	30	1.0	1.0	5.0
LMN1D		1.0	50	200	-	30	1.0	1.0	5.0
LMN1G		1.0	50	400	-	30	1.0	1.0	5.0
LMN1J		1.0	50	600	-	30	1.0	1.0	5.0
LMN1K		1.0	50	800	-	30	1.0	1.0	5.0
LMN1M		1.0	50	1000	-	30	1.0	1.0	5.0
1N4001G/GN1A Series, 1 A, Case Type: DO-41/SMA									
1N4001G	**GN1A**	1.0	75	50	10	30	1.0	1.0	5.0
1N4002G	**GN1B**	1.0	75	100	10	30	1.0	1.0	5.0
1N4003G	**GN1D**	1.0	75	200	10	30	1.0	1.0	5.0
1N4004G	**GN1G**	1.0	75	400	10	30	1.0	1.0	5.0
1N4005G	**GN1J**	1.0	75	600	10	30	1.0	1.0	5.0
1N4006G	**GN1K**	1.0	75	800	10	30	1.0	1.0	5.0
1N4007G	**GN1M**	1.0	75	1000	10	30	1.0	1.0	5.0
BY133G	**GN13**	1.0	75	1300	10	30	1.0	1.0	5.0

Glass Passivated Rectifier Diodes

The plastic material carries U/L recognition 94V-0.

Type No.		Max. Average Forward Rectified Current		Max. Repetitive Peak Reverse Voltage	Max. Repetitive Peak Forward Current	Max. Peak Forward Surge Current	Max. Forward Voltage Drop at Ta=25°C		Max. Reverse Current at Ta=25°C
		$I_{F(AV)}$ @	Ta	V_{RRM}	I_{FRM}	I_{FSM}	V_F @	I_F	I_R
Axial Lead	SMD	(A)	(°C)	(V)	(A)	(A)	(V)	(A)	(μA)
GF1A Series, 1 A, Case Type: SMA									
	GF1A	1.0	75	50	-	30	1.0	1.0	5.0
	GF1B	1.0	75	100	-	30	1.0	1.0	5.0
	GF1D	1.0	75	200	-	30	1.0	1.0	5.0
	GF1G	1.0	75	400	-	30	1.0	1.0	5.0
	GF1J	1.0	75	600	-	30	1.0	1.0	5.0
	GF1K	1.0	75	800	-	30	1.0	1.0	5.0
	GF1M	1.0	75	1000	-	30	1.0	1.0	5.0
DL4001 Series, 1 A, Case Type: MELF (Plastic)									
	DL4001	1.0	75	50	-	30	1.1	1.0	5.0
	DL4002	1.0	75	100	-	30	1.1	1.0	5.0
	DL4003	1.0	75	200	-	30	1.1	1.0	5.0
	DL4004	1.0	75	400	-	30	1.1	1.0	5.0
	DL4005	1.0	75	600	-	30	1.1	1.0	5.0
	DL4006	1.0	75	800	-	30	1.1	1.0	5.0
	DL4007	1.0	75	1000	-	30	1.1	1.0	5.0
GP10A Series, 1 A, Case Type: DO-41									
GP10A		1.0	75	50	-	30	1.1	1.0	5.0
GP10B		1.0	75	100	-	30	1.1	1.0	5.0
GP10D		1.0	75	200	-	30	1.1	1.0	5.0
GP10G		1.0	75	400	-	30	1.1	1.0	5.0
GP10J		1.0	75	600	-	30	1.1	1.0	5.0
GP10K		1.0	75	800	-	30	1.2	1.0	5.0
GP10M		1.0	75	1000	-	30	1.2	1.0	5.0
GP10N		1.0	75	1100	-	30	1.2	1.0	5.0
GP10Q		1.0	75	1200	-	30	1.2	1.0	5.0
GP10T		1.0	75	1300	-	30	1.3	1.0	5.0
GP10V		1.0	75	1400	-	30	1.3	1.0	5.0
GP10W		1.0	75	1500	-	30	1.3	1.0	5.0
GP10Y		1.0	75	1600	-	30	1.3	1.0	5.0
GL41Y, 1 A, Case Type: MELF									
	GL41Y	1.0	75	1600	-	30	1.2	1.0	10

Glass Passivated Rectifier Diodes

The plastic material carries U/L recognition 94V-0.

Type No.		Max. Average Forward Rectified Current		Max. Repetitive Peak Reverse Voltage	Max. Repetitive Peak Forward Current	Max. Peak Forward Surge Current	Max. Forward Voltage Drop at Ta=25°C		Max. Reverse Current at Ta=25°C
		$I_{F(AV)}$ @ Ta		V_{RRM}	I_{FRM}	I_{FSM}	V_F @ I_F		I_R
Axial Lead	SMD	(A)	(°C)	(V)	(A)	(A)	(V)	(A)	(μA)
1N5391G/GNOA Series, 1.5 A, Case Type: DO-41/SMA									
1N5391G	**GNOA**	1.5	75	50	-	50	1.1	1.5	5.0
1N5392G	**GNOB**	1.5	75	100	-	50	1.1	1.5	5.0
1N5393G	**GNOD**	1.5	75	200	-	50	1.1	1.5	5.0
1N5394G	**GNOE**	1.5	75	300	-	50	1.1	1.5	5.0
1N5395G	**GNOG**	1.5	75	400	-	50	1.1	1.5	5.0
1N5396G	**GNOH**	1.5	75	500	-	50	1.1	1.5	5.0
1N5397G	**GNOJ**	1.5	75	600	-	50	1.1	1.5	5.0
1N5398G	**GNOK**	1.5	75	800	-	50	1.1	1.5	5.0
1N5399G	**GNOM**	1.5	75	1000	-	50	1.1	1.5	5.0
DR200G/GN2A Series, 2 A, Case Type: D2/SMB									
DR200G	**GN2A**	2.0	50	50	15	75	1.0	2.0	5.0
DR201G	**GN2B**	2.0	50	100	15	75	1.0	2.0	5.0
DR202G	**GN2D**	2.0	50	200	15	75	1.0	2.0	5.0
DR204G	**GN2G**	2.0	50	400	15	75	1.0	2.0	5.0
DR206G	**GN2J**	2.0	50	600	15	75	1.0	2.0	5.0
DR208G	**GN2K**	2.0	50	800	15	75	1.0	2.0	5.0
DR210G	**GN2M**	2.0	50	1000	15	75	1.0	2.0	5.0
GNTA Series, 2.5 A, Case Type: SMB									
	GNTA	2.5	75	50	-	150	1.1	2.5	5.0
	GNTB	2.5	75	100	-	150	1.1	2.5	5.0
	GNTD	2.5	75	200	-	150	1.1	2.5	5.0
	GNTG	2.5	75	400	-	150	1.1	2.5	5.0
	GNTJ	2.5	75	600	-	150	1.1	2.5	5.0
	GNTK	2.5	75	800	-	150	1.1	2.5	5.0
	GNTM	2.5	75	1000	-	150	1.1	2.5	5.0
1N5400G/GN3A Series, 3 A, Case Type: DO-201AD/SMC									
1N5400G	**GN3A**	3.0	75	50	20	150	1.0	3.0	5.0
1N5401G	**GN3B**	3.0	75	100	20	150	1.0	3.0	5.0
1N5402G	**GN3D**	3.0	75	200	20	150	1.0	3.0	5.0
1N5404G	**GN3G**	3.0	75	400	20	150	1.0	3.0	5.0
1N5406G	**GN3J**	3.0	75	600	20	150	1.0	3.0	5.0
1N5407G	**GN3K**	3.0	75	800	20	150	1.1	3.0	5.0
1N5408G	**GN3M**	3.0	75	1000	20	150	1.1	3.0	5.0
BY550-1000GS, 6 A, Case Type: DO-201AD									
BY550-1000GS		5.0	60	1000	-	300	1.1	5.0	20

High Speed Switching Diodes

Type No.	Max. Average Forward Rectified Current		Max. Reverse Voltage	Max. Repetitive Peak Forward Current	Max. Repetitive Surge Current	Max. Forward Voltage Drop at Ta=25°C		Max. Reverse Current at Ta=25°C	Max. Reverse Recovery Time (1)	Max. Power Dissipation
	$I_{F(AV)}$ @ Ta		V_{RM}	I_{FRM}	I_{FSM}	V_F @ I_F		I_R	Trr	P_D
	(mA)	(°C)	(V)	(mA)	(A)	(V)	(mA)	(μA)	(ns)	(mW)
1N4148 Series, Case Type: DO-35										
1N4148	150	25	75	450	0.5	1.0	10	5.0	4	500
1N4149	150	25	100	-	0.5	1.0	10	5.0 nA	4	500
1N4150	200	25	50	600	0.5	1.0	200	0.1	4	500
1N4151	200	25	75	450	0.5	1.0	50	0.05	4	500
1N4152	150	25	30	450	-	0.88	20	0.05	2	500
1N4153	150	25	50	450	-	0.88	20	0.05	2	500
1N4154	150	25	25	450	-	1.0	30	0.1	4	500
1N4447 Series, Case Type: DO-35										
1N4447	150	25	75	450	-	1.0	20	5.0	4	500
1N4448	150	25	75	450	-	1.0	10	5.0	4	500
1N4449	150	25	75	450	-	1.0	30	5.0	4	500
1N4450	200	25	30	600	-	1.0	200	0.05	4	500
1N4454	150	25	75	450	-	1.0	10	5.0	4	500
1N4531 Series, Case Type: DO-34										
1N4531	200	75	75	-	0.5	1.0	10	25 nA	4	500
1N4532	200	75	75	-	0.5	1.0	10	100 nA	2	500
1N4148S	150	25	75	450	0.5	1.0	10	5.0	4	500
1N914 Series, Case Type: DO-35										
1N914	75	25	75	-	0.5	1.0	10	25 nA	4	250
1N914A	75	25	75	-	0.5	1.0	20	25 nA	4	250
1N914B	75	25	75	-	0.5	0.72	5	25 nA	4	250
1S1585 Series, Case Type: DO-35										
1S1585	150	25	80	-	0.7	1.0	100	0.5	2	300
1S1586	150	25	50	-	0.7	1.0	100	0.5	2	300
1S1587	130	25	50	-	0.6	1.2	100	0.5	2	300
1S1588	120	25	30	-	0.5	1.3	100	0.5	4	300
1S2076A	150	25	70	-	1.0	0.8	10	0.1	4	250
1SS130 Series, Case Type: DO-34										
1SS130	130	25	75	400	-	1.0	10	0.5	4	300
1SS131	130	25	80	400	0.6	1.2	100	0.5	4	300
1SS132	120	25	50	350	0.5	1.2	100	0.5	4	300
1SS133	110	25	35	300	0.6	1.2	100	0.5	4	300

Note : (1) Reverse Recovery test conditions : I_F = 1A, di/dt = 50 A/ms

High Speed Switching Diodes

Type No.	Max. Average Forward Rectified Current		Max. Reverse Voltage	Max. Repetitive Peak Forward Current	Max. Repetitive Surge Current	Max. Forward Voltage Drop at Ta=25°C		Max. Reverse Current at Ta=25°C	Max. Reverse Recovery Time (1)	Max. Power Dissipation
	$I_{F(AV)}$ @ Ta		V_{RM}	I_{FRM}	I_{FSM}	V_F @ I_F		I_R	Trr	P_D
	(mA)	(°C)	(V)	(mA)	(A)	(V)	(mA)	(μA)	(ns)	(mW)
1SS176 Series, Case Type: DO-34										
1SS176	100	25	30	300	1.0	1.2	100	0.5	4.0	300
1SS177	100	25	50	300	1.0	1.2	100	0.5	4.0	300
1SS178	100	25	80	300	1.0	1.2	100	0.5	4.0	300
1SS270A	150	25	70	-	1.0	0.8	10	1.0	3.5	250
BAS15	100	150	50	225	0.5	1.1	100	0.2	4.0	350
BAV10 Series, Case Type: DO-35										
BAV10	300	25	60	600	1.0	1.0	200	0.1	6	350
BAV19	200	25	100	625	1.0	1.0	100	0.1	50	500
BAV20	200	25	150	625	1.0	1.0	100	0.1	50	500
BAV21	200	25	200	625	1.0	1.0	100	0.1	50	500
BAW62 Series, Case Type: DO-35										
BAW62	250	25	75	450	0.5	1.0	100	5.0	4	350
BAW75	150	25	25	-	2.0	1.0	30	0.1	4	500
BAW76	150	25	50	-	2.0	1.0	100	0.1	4	500
BAV100 Series, Case Type: Mini MELF										
BAV100	200	25	50	625	1.0	1.0	100	0.1	50	400
BAV101	200	25	100	625	1.0	1.0	100	0.1	50	400
BAV102	200	25	150	625	1.0	1.0	100	0.1	50	400
BAV103	200	25	200	625	1.0	1.0	100	0.1	50	400
BAV105	300	25	60	600	0.5	1.0	200	0.1	6	500
BAX14 Series, Case Type: DO-35										
BAX14	400	25	40	2A	9.0	1.00	300	0.1	50	450
BAX18	400	25	75	2A	9.0	1.00	300	5.0	50	450
BAY80	200	25	150	650	1.0	1.07	150	0.1	50	400
LL4148 Series, Case Type: Mini MELF										
LL4148	200	25	75	450	0.5	1.00	10	5.00	4	500
LL4150	200	25	50	600	0.5	1.00	200	0.10	4	500
LL4151	200	25	50	450	0.5	1.00	50	0.05	4	500
LL4153	200	25	50	450	0.5	0.88	50	0.05	4	500
LL4448	200	25	75	450	0.5	1.00	100	5.00	4	500

High Speed Switching Diodes

The plastic material carries U/L recognition 94V-0.

Type No.	Max. Average Forward Rectified Current		Max. Reverse Voltage	Max. Repetitive Peak Forward Current	Max. Repetitive Surge Current	Max. Forward Voltage Drop at Ta=25°C		Max. Reverse Current at Ta=25°C	Max. Reverse Recovery Time [1]	Max. Power Dissipation
	$I_{F(AV)}$ @ Ta		V_{RM}	I_{FRM}	I_{FSM}	V_F @ I_F		I_R	Trr	P_D
	(mA)	(°C)	(V)	(mA)	(A)	(V)	(mA)	(μA)	(ns)	(mW)
BAV19W - 21W, Case Type: SOD-123 										
BAV19W	200	25	120	625	2.5	1.0	100	0.1	50	250
BAV20W	200	25	200	625	2.5	1.0	100	0.1	50	250
BAV21W	200	25	250	625	2.5	1.0	100	0.1	50	250
1N4448W, Case Type: SOD-123 										
1N4448W	150	25	100	-	4.0	1.25	150	0.1	4.0	400
1N914W, Case Type: SOD-123 										
1N914W	200	25	100	-	1.0	1.00	10	5.0	4.0	400
1N4148W/WS/WT, Case Type: SOD-123, SOD-323, SOD-523   										
1N4148W	150	25	100	-	0.50	1.0	10	5.0	4.0	400
1N4148WS	150	25	75	-	0.35	1.0	10	5.0	4.0	200
1N4148WT	125	25	100	-	2.00	1.0	50	1.0	4.0	150
1SS355 Series, Case Type: SOD-323 										
1SS355	100	25	90	-	0.5	1.2	100	0.1	4.0	-
BAS16WS , Case Type: SOD-323 										
BAS16WS	250	25	75	-	0.5	1.0	50	1.0	6.0	200
BAV19WS Series, Case Type: SOD-323 										
BAV19WS	200	25	100	625	1.0	1.0	100	0.1	50	200
BAV20WS	200	25	150	625	1.0	1.0	100	0.1	50	200
BAV21WS	200	25	200	625	1.0	1.0	100	0.1	50	200
BAS216WS - 316WS, BAS321, Case Type: SOD-323 										
BAS216WS	250	25	85	-	4.0	1.25	150	1.0	4.0	400
BAS316WS	250	90	100	-	4.0	1.25	150	1.0	4.0	400
BAS321	250	25	250	-	9.0	1.25	200	0.1	4.0	300
1SS352 Series, Case Type: SOD-323 										
1SS352	100	25	85	-	1.0	0.98	100	0.5	4.0	200

High Speed Switching Diodes

The plastic material carries U/L recognition 94V-0.

Type No.	Max. Average Forward Rectified Current		Max. Reverse Voltage	Max. Repetitive Peak Forward Current	Max. Repetitive Surge Current	Max. Forward Voltage Drop at Ta=25°C		Max. Reverse Current at Ta=25°C	Max. Reverse Recovery Time (1)	Max. Power Dissipation
	$I_{F(AV)}$ @ Ta		V_{RM}	I_{FRM}	I_{FSM}	V_F @ I_F		I_R	Trr	P_D
	(mA)	(°C)	(V)	(mA)	(A)	(V)	(mA)	(μA)	(ns)	(mW)
RB520S-30, Case Type: SOD-523 										
RB520S-30	200	25	30	-	1.0	0.6	200	1.0	4.0	-
BAS216WT, Case Type: SOD-523 										
BAS216WT	250	25	85	-	4.0	1.25	150	1.0	4.0	400
1N914WT, Case Type: SOD-523 										
1N914WT	200	25	100	-	0.5	1.00	10	5.0	4.0	150
BAS521, Case Type: SOD-523 										
BAS521	250	90	300	-	4.5	1.10	100	0.2	50	500
1SS181- 7 Series, Case Type: SOT-23 										
1SS181	100	25	85	-	2.0	1.2	100	0.5	4.0	150
1SS184	100	25	85	-	2.0	1.2	100	0.5	4.0	150
1SS187	100	25	85	-	2.0	1.2	100	0.5	4.0	150
1SS226 , Case Type: SOT-23 										
1SS226	100	25	85	-	2.0	1.2	100	0.5	4.0	150
BAS16, Case Type: SOT-23 										
BAS16	215	25	85	500	4	1.25	150	1.0	4.0	250
BAS116	215	25	85	500	4	1.25	150	5(nA)	3(μs)	250
BAS19 - 21, Case Type: SOT-23 										
BAS19	200	25	120	-	9	1.0	100	0.1	50	250
BAS20	200	25	200	-	9	1.0	100	0.1	50	250
BAS21	200	25	250	-	9	1.0	100	0.1	50	250

High Speed Switching Diodes

The plastic material carries U/L recognition 94V-0.

Type No.	Max. Average Forward Rectified Current		Max. Reverse Voltage	Max. Repetitive Peak Forward Current	Max. Repetitive Surge Current	Max. Forward Voltage Drop at Ta=25°C		Max. Reverse Current at Ta=25°C	Max. Reverse Recovery Time (1)	Max. Power Dissipation
	$I_{F(AV)}$ @ Ta		V_{RM}	I_{FRM}	I_{FSM}	V_F @ I_F		I_R	Trr	P_D
	(mA)	(°C)	(V)	(mA)	(A)	(V)	(mA)	(μA)	(ns)	(mW)
BAS70 Series, Case Type: SOT-23 										
BAS70-00	200	25	70	-	0.6	1.0	15	0.1	5.0	200
BAS70-04	200	25	70	-	0.6	1.0	15	0.1	5.0	200
BAS70-05	200	25	70	-	0.6	1.0	15	0.1	5.0	200
BAS70-06	200	25	70	-	0.6	1.0	15	0.1	5.0	200
BAV23 Series, Case Type: SOT-23 										
BAV23	400	25	250	625	9.0	1.0	100	0.1	50	350
BAV23SE	400	25	250	625	9.0	1.0	100	0.1	50	350
BAV23CC	400	25	250	625	9.0	1.0	100	0.1	50	350
BAV23CA	400	25	250	625	9.0	1.0	100	0.1	50	350
BAV70 & BAV99, Case Type: SOT-23 										
BAV70	200	25	70	-	2	1.0	50	5.0	6.0	350
BAV99	125	25	85	450	1	1.0	50	1.0	4.0	250
BAW56, Case Type: SOT-23 										
BAW56	125	25	85	450	4	1.25	150	1.0	4.0	250
BAT400D, Case Type: SOT-23 										
BAT400D	500	25	40	-	3.0	0.55	500	30	4.0	480
MMBD914/MMBD7000, Case Type: SOT-23 										
MMBD914	200	25	100	-	0.5	1.0	10	5.0	4.0	225
MMBD7000	200	25	100	-	2.0	1.1	100	3	4.0	350
MMBD4148, Case Type: SOT-23 										
MMBD4148	200	25	100	700	1.0	1.0	10	5.0	4.0	350
MMBD4148SE	200	25	100	700	1.0	1.0	10	5.0	4.0	350
MMBD4148CC	200	25	100	700	1.0	1.0	10	5.0	4.0	350
MMBD4148CA	200	25	100	700	1.0	1.0	10	5.0	4.0	350

High Voltage Rectifier Diodes

The plastic material carries U/L recognition 94V-0.

Type No.		Max. Average Forward Rectified Current		Max. Repetitive Peak Reverse Voltage	Max. Repetitive Peak Forward Current	Max. Peak Forward Surge Current	Max. Forward Voltage Drop at Ta=25°C		Max. Reverse Current at Ta=25°C
		$I_{F(AV)}$ @ Ta		V_{RRM}	I_{FRM}	I_{FSM}	V_F @ I_F		I_R
Axial Lead	SMD	(A)	(°C)	(V)	(A)	(A)	(V)	(A)	(μA)
HVR125 Series, 0.2 - 0.5 A, Case Type: DO-41									
HVR125		0.5	50	2500	5.0	30	3.3	1.0	5.0
HVR130		0.5	50	3000	5.0	30	3.3	1.0	5.0
HVR140		0.3	50	4000	5.0	30	5.0	1.0	5.0
HVR150		0.3	50	5000	5.0	30	5.0	1.0	5.0
HVR160		0.2	50	6000	5.0	30	8.0	1.0	5.0
HVR170		0.2	50	7000	5.0	30	8.0	1.0	5.0
HVR180		0.2	50	8000	5.0	30	8.0	1.0	5.0
GP02-20 Series, 0.25 A, Case Type: DO-41									
GP02-20		0.25	55	2000	-	15	3.0	1.0	5.0
GP02-25		0.25	55	2500	-	15	3.0	1.0	5.0
GP02-30		0.25	55	3000	-	15	3.0	1.0	5.0
GP02-35		0.25	55	3500	-	15	3.0	1.0	5.0
GP02-40		0.25	55	4000	-	15	3.0	1.0	5.0
HVR230 Series, 0.5 - 1 A, Case Type: D2									
HVR230		1.0	50	3000	-	50	3.0	1.0	5.0
HVR250		0.5	50	5000	-	50	5.0	1.0	5.0
HVR112/SN1N Series, 1 A, Case Type: DO-41/SMA									
HVR112	**SN1N**	1.0	75	1200	5.0	30	2.2	1.0	5.0
HVR114	**SN1O**	1.0	75	1400	5.0	30	2.2	1.0	5.0
HVR116	**SN1P**	1.0	75	1600	5.0	30	2.2	1.0	5.0
HVR118	**SN1Q**	1.0	75	1800	5.0	30	2.2	1.0	5.0
HVR120	**SN1R**	1.0	75	2000	5.0	30	2.2	1.0	5.0
	S1T	1.0	75	3000	-	30	3.0	1.0	5.0
SHV-01JN - SHV-06HN, 2 - 30 mA, Case Type: M1A & DO-41									
SHV-01JN*		0.030	25	500	-	3.0	1.0	0.010	10
SHV-02JN		0.030	25	1000	-	3.0	2.0	0.010	10
SHV-06JN		0.030	25	3000	-	3.0	6.0	0.010	10
SHV-05J		0.030	25	2500	-	3.0	5.0	0.010	10
SHV-04		0.002	25	4000	-	0.5	20	0.010	1.0
SHV-06HN		0.002	25	6000	-	0.5	24	0.010	1.0
HVR3509/HVR3509H , 0.35A, Case Type: DO-201AD									
HVR3509		0.35A	25	9000	-	30	8.0	0.35	5.0
HVR3509H		0.35A	25	9000	-	30	10	0.35	5.0

* M1A Package

High Voltage Rectifier Diodes

The plastic material carries U/L recognition 94V-0.

Type No.		Max. Average Forward Rectified Current		Max. Repetitive Peak Reverse Voltage	Max. Repetitive Peak Forward Current	Max. Peak Forward Surge Current	Max. Forward Voltage Drop at Ta=25°C		Max. Reverse Current at Ta=25°C
		$I_{F(AV)}$ @ Ta		V_{RRM}	I_{FRM}	I_{FSM}	V_F @ I_F		I_R
Axial Lead	SMD	(A)	(°C)	(V)	(A)	(A)	(V)	(A)	(μA)

HVR4509 , 0.45A, Case Type: DO-201AD



HVR4509		0.45A	25	9000	-	30	8.0	0.45	5.0

HVR312/SN3N Series, 3 A, Case Type: DO-201AD/SMC



HVR312	**SN3N**	3.0	50	1200	10	100	2.2	3.0	10
HVR314	**SN3O**	3.0	50	1400	10	100	2.2	3.0	10
HVR316	**SN3P**	3.0	50	1600	10	100	2.2	3.0	10
HVR318	**SN3Q**	3.0	50	1800	10	100	2.2	3.0	10
HVR320	**SN3R**	3.0	50	2000	10	100	2.2	3.0	10

HVR512/SN5N Series, 5 A, Case Type: DO-201AD/SMC



HVR512	**SN5N**	5.0	50	1200	20	200	2.2	5.0	10
HVR514	**SN5O**	5.0	50	1400	20	200	2.2	5.0	10
HVR516	**SN5P**	5.0	50	1600	20	200	2.2	5.0	10
HVR518	**SN5Q**	5.0	50	1800	20	200	2.2	5.0	10
HVR520	**SN5R**	5.0	50	2000	20	200	2.2	5.0	10

Note: V_{RRM} > 2000 V is available on special request

High Voltage Fast Recovery Rectifier Diodes

The plastic material carries U/L recognition 94V-0.

Type No.		Max. Average Forward Rectified Current		Max. Repetitive Peak Reverse Voltage	Max. Reverse Recovery Time	Max. Peak Forward Surge Current	Max. Forward Voltage Drop at Ta=25°C		Max. Reverse Current at Ta=25°C
		$I_{F(AV)}$ @ Ta		V_{RRM}	Trr	I_{FSM}	V_F @ I_F		I_R
Axial Lead	SMD	(A)	(°C)	(V)	(ns)	(A)	(V)	(A)	(μA)

SHV-02 -SHV-03S, 2 mA, Case Type: M1A



SHV-02		0.002	25	2000	180(1)	0.3	16	0.010	1.0
SHV-03		0.002	25	3000	180(1)	0.5	16	0.010	1.0
SHV-03S		0.002	25	3000	180(1)	0.3	16	0.010	1.0

SHV- 05EN - SHV- 08EN, 2 mA, Case Type: DO-41



SHV-05EN		0.002	25	5000	150(1)	0.5	20	0.010	1.0
SHV-06EN		0.002	25	6000	150(1)	0.5	24	0.010	1.0
SHV-08EN		0.002	25	8000	50(2)	0.5	30	0.010	1.0

Notes:

(1) Reverse Recovery Test Conditions : I_F = 10 mA, I_{RP} = 10 mA.

(2) Reverse Recovery Test Conditions : I_F = 0.5A, I_R = 1 A, Irr = 0.25 A

High Voltage Fast Recovery Rectifier Diodes

The plastic material carries U/L recognition 94V-0.

Type No.	Max. Average Forward Rectified Current		Max. Repetitive Peak Reverse Voltage	Max. Repetitive Peak Forward Current	Max. Peak Forward Surge Current	Max. Forward Voltage Drop at Ta=25°C		Max. Reverse Current at Ta=25°C	Max. Reverse Recovery Time [1]
	$I_{F(AV)}$ @ Ta		V_{RRM}	I_{FRM}	I_{FSM}	V_F @ I_F		I_R	Trr
	(A)	(°C)	(V)	(A)	(A)	(V)	(A)	(μA)	(ns)
BY8004 Series, Case Type: DO-41									
BY8004	0.02	90	5000	0.5	-	20	0.1	3.0 *	100
BY8006	0.01	100	8000	0.5	-	25	0.1	3.0 *	100
								* Tj=120°C	
HFR125 Series, 0.25 - 0.30 A, Case Type: DO-41									
HFR125	0.25	50	2500	-	30	5.0	0.25	1.0	250
HFR130	0.25	50	3000	-	30	7.0	0.25	1.0	200
HFR180	0.30	50	8000	-	40	9.0	0.3	5.0	200
HUF150 , 0.5 A, Case Type: DO-41									
HUF150	0.5	50	5000	-	20	12.0	0.5	5.0	90
GS1S , 0.2 A, Case Type: SMA									
GS1S	0.2	25	2500	-	30	6.0	0.2	1.0	35
RGP02 Series, 0.5 A, Case Type: DO-41									
RGP02-12E	0.5	55	1200	5.0	20	1.8	0.1	5.0	300
RGP02-14E	0.5	55	1400	5.0	20	1.8	0.1	5.0	300
RGP02-16E	0.5	55	1600	5.0	20	1.8	0.1	5.0	300
RGP02-18E	0.5	55	1800	5.0	20	1.8	0.1	5.0	300
RGP02-20E	0.5	55	2000	5.0	20	1.8	0.1	5.0	300
SR1P Series, 0.5 A, Case Type: SMA									
SR1N	0.5	75	1200	-	30	2.6	1.0	5.0	300
SR1O	0.5	75	1400	-	30	2.6	1.0	5.0	300
SR1P	0.5	75	1600	-	30	2.6	1.0	5.0	300
SR1R	0.5	75	2000	-	30	3.0	0.5	5.0	500
GR15 Series, 1 A, Case Type: DO-215AC									
GR15-G	0.5	55	1500	-	20	2.0	0.1	5.0	300
GR20-G	0.5	55	2000	-	20	2.4	0.1	5.0	500
UHVR112, 1.0A Case Type: DO-41									
UHVR112	1.0	75	1200	-	30	2.2	1.0	5.0	75
3TH41 Series, 3 A, Case Type: DO-201AD									
3TH41	3.0	25	1500	-	50	1.2	3.0	10	1.5μs [2]
FHVR1120, 0.2A Case Type: D2									
FHVR1120	0.2	50	12000	-	20	13	0.2	5.0	150

Notes: (1) Reverse Recovery test conditions : I_F = 0.5A, I_R = 1 A, Irr = 0.25 A

(2) Reverse Recovery test conditions : I_F = 100 mA, I_R = 100 mA

Cell Rectifier Diodes

Type No.	Max. Average Forward Rectified Current		Max. Repetitive Peak Reverse Voltage	Max. Repetitive Peak Forward Current	Max. Peak Forward Surge Current	Max. Forward Voltage Drop at Ta=25°C		Max. Reverse Current at Ta=25°C
	$I_{F(AV)}$ @	Ta	V_{RRM}	I_{FRM}	I_{FSM}	V_F @	I_F	I_R
	(A)	(°C)	(V)	(A)	(A)	(V)	(A)	(μA)
CN3 Series, 3 A, Case Type: C3A 								
CN3A	3.0	75	50	30	200	1.1	3.0	5.0
CN3B	3.0	75	100	30	200	1.1	3.0	5.0
CN3D	3.0	75	200	30	200	1.1	3.0	5.0
CN3G	3.0	75	400	30	200	1.1	3.0	5.0
CN3J	3.0	75	600	30	200	1.1	3.0	5.0
CN3K	3.0	75	800	30	200	1.1	3.0	5.0
CN3M	3.0	75	1000	30	200	1.1	3.0	5.0
CN5 Series, 5 A, Case Type: C5A 								
CN5A	5.0	75	50	60	250	1.1	5.0	5.0
CN5B	5.0	75	100	60	250	1.1	5.0	5.0
CN5D	5.0	75	200	60	250	1.1	5.0	5.0
CN5G	5.0	75	400	60	250	1.1	5.0	5.0
CN5J	5.0	75	600	60	250	1.1	5.0	5.0
CN5K	5.0	75	800	60	250	1.1	5.0	5.0
CN5M	5.0	75	1000	60	250	1.1	5.0	5.0
CN8 Series, 8 A, Case Type: C8A 								
CN8A	8.0	75	50	60	300	1.1	8.0	5.0
CN8B	8.0	75	100	60	300	1.1	8.0	5.0
CN8D	8.0	75	200	60	300	1.1	8.0	5.0
CN8G	8.0	75	400	60	300	1.1	8.0	5.0
CN8J	8.0	75	600	60	300	1.1	8.0	5.0
CN8K	8.0	75	800	60	300	1.1	8.0	5.0
CN8M	8.0	75	1000	60	300	1.1	8.0	5.0
CN18 Series, 18 A, Case Type: C18A 								
CN18A	18	75	50	75	400	1.1	18	5.0
CN18B	18	75	100	75	400	1.1	18	5.0
CN18D	18	75	200	75	400	1.1	18	5.0
CN18G	18	75	400	75	400	1.1	18	5.0
CN18J	18	75	600	75	400	1.1	18	5.0
CN18K	18	75	800	75	400	1.1	18	5.0
CN18M	18	75	1000	75	400	1.1	18	5.0
CN25 Series, 25 A, Case Type: C18A 								
CN25A	25	75	50	75	400	1.1	25	5.0
CN25B	25	75	100	75	400	1.1	25	5.0
CN25D	25	75	200	75	400	1.1	25	5.0
CN25G	25	75	400	75	400	1.1	25	5.0
CN25J	25	75	600	75	400	1.1	25	5.0
CN25K	25	75	800	75	400	1.1	25	5.0
CN25M	25	75	1000	75	400	1.1	25	5.0

Automotive Rectifier Diodes

The plastic material carries U/L recognition 94V-0.

Type No.	Max. Average Forward Rectified Current		Max. Repetitive Peak Reverse Voltage	Max. Repetitive Peak Forward Current	Max. Peak Forward Surge Current	Max. Forward Voltage Drop at Ta=25°C		Max. Reverse Current at Ta=25°C
	$I_{F(AV)}$ @ Ta		V_{RRM}	I_{FRM}	I_{FSM}	V_F @ I_F		I_R
	(A)	(°C)	(V)	(A)	(A)	(V)	(A)	(μA)
AR2500/MR2500 Series, 25 A, Case Type: BUTTON/MR								
AR2500(1)	**MR2500**(1)	25	150	50	75	400	1.0	25	5.0
AR2501(1)	**MR2501**(1)	25	150	100	75	400	1.0	25	5.0
AR2502(1)	**MR2502**(1)	25	150	200	75	400	1.0	25	5.0
AR2504(1)	**MR2504**(1)	25	150	400	75	400	1.0	25	5.0
AR2506(1)	**MR2506**(1)	25	150	600	75	400	1.0	25	5.0
AR2508(1)	**MR2508**(1)	25	150	800	75	400	1.0	25	5.0
AR2510(1)	**MR2510**(1)	25	150	1000	75	400	1.0	25	5.0
AR2512(1)	**MR2512**(1)	25	150	1200	75	400	1.0	25	5.0
AR3500/MR3500 Series, 35 A, Case Type: BUTTON/MR								
AR3500(1)	**MR3500**(1)	35	150	50	75	400	1.1	35	5.0
AR3501(1)	**MR3501**(1)	35	150	100	75	400	1.1	35	5.0
AR3502(1)	**MR3502**(1)	35	150	200	75	400	1.1	35	5.0
AR3504(1)	**MR3504**(1)	35	150	400	75	400	1.1	35	5.0
AR3506(1)	**MR3506**(1)	35	150	600	75	400	1.1	35	5.0
AR3508(1)	**MR3508**(1)	35	150	800	75	400	1.1	35	5.0
AR3510(1)	**MR3510**(1)	35	150	1000	75	400	1.1	35	5.0
AR3512(1)	**MR3512**(1)	35	150	1200	75	400	1.1	35	5.0
AR5000/MR5000 Series, 50 A, Case Type: BUTTON/MR								
AR5000(1)	**MR5000**(1)	50	150	50	75	500	1.1	50	5.0
AR5001(1)	**MR5001**(1)	50	150	100	75	500	1.1	50	5.0
AR5002(1)	**MR5002**(1)	50	150	200	75	500	1.1	50	5.0
AR5004(1)	**MR5004**(1)	50	150	400	75	500	1.1	50	5.0
AR5006(1)	**MR5006**(1)	50	150	600	75	500	1.1	50	5.0
AR5008(1)	**MR5008**(1)	50	150	800	75	500	1.1	50	5.0
AR5010(1)	**MR5010**(1)	50	150	1000	75	500	1.1	50	5.0
AR5012(1)	**MR5012**(1)	50	150	1200	75	500	1.1	50	5.0
MR750 Series, 22 A, Case Type: D6								
MR750		22	60 (T_L)	50	-	400	0.9	6.0	25
MR751		22	60 (T_L)	100	-	400	0.9	6.0	25
MR752		22	60 (T_L)	200	-	400	0.9	6.0	25
MR754		22	60 (T_L)	400	-	400	0.9	6.0	25
MR756		22	60 (T_L)	600	-	400	0.9	6.0	25
MR758		22	60 (T_L)	800	-	400	0.9	6.0	25
MR760		22	60 (T_L)	1000	-	400	0.9	6.0	25









Note:

(1) Wire leads version available in case type D6 ; Add suffix "L" e.g. AR2500L

Avalanche Rectifier Diodes

The plastic material carries U/L recognition 94V-0.

Type No.	Max. Allowable Avalanche Current (Note 1)	Max. Repetitive Peak Reverse Voltage	Min. Avalanche Breakdown Voltage @ 1 mA	Max. Avalanche Breakdown Voltage @ 1 mA	Max. Peak Forward Surge Current	Max. Reverse Current at Ta=25°C
	I_{ZSM}	V_{RRM}	$V_{BR(Min)}$	$V_{BR(Max)}$	I_{FSM}	I_R
	(A)	(V)	(V)	(V)	(A)	(μA)
R2G Series, 1 A, Case Type: D2						
R2G	1.0	115	120	145	-	10
R2M	1.0	130	135	180	75	5.0
R2KN	1.0	140	150	170	-	10
R2KS	1.0	145	160	180	-	10
R2K	1.0	150	170	200	-	10
BYD13D Series, 1.4 A, Case Type: DO-41						
BYD13D	1.4	200	225	-	20	1.0
BYD13G	1.4	400	450	-	20	1.0
BYD13J	1.4	600	650	-	20	1.0
BYD13K	1.4	800	900	-	20	1.0
BYD13M	1.4	1000	1100	-	20	1.0
BYD17D Series, 1.5 A, Case Type: MELF(Pastic)						
BYD17D	1.5	225	20	1.05	1.0	1.0
BYD17G	1.5	450	20	1.05	1.0	1.0
BYD17J	1.5	650	20	1.05	1.0	1.0
BYD17K	1.5	900	20	1.05	1.0	1.0
BYD17M	1.5	1100	20	1.05	1.0	1.0
BYW54 Series, 2.0 A, Case Type: D2						
BYW54	2.0	600	650	-	50	1.0
BYW55	2.0	800	900	-	50	1.0
BYW56	2.0	1000	1100	-	50	1.0
R2KY Series, 2.0 - 3.0 A, Case Type: D2						
R2KY	2.0	120	130	155	-	10
RM25	3.0	40	50	61.5	-	5.0
BYX134PL Series, 0.05 A, Case Type: D2						
BYX134PL	0.05	4000	5500	7500	-	1.0

* For case type DO-41 ; Add suffix "G" e.g. BYX134GPL

Note : (1) 100 μs single square pulse

Avalanche Fast Recovery Rectifier Diodes

The plastic material carries U/L recognition 94V-0.

Type No.	Max. Average Forward Rectified Current		Max. Repetitive Peak Reverse Voltage	Min. Avalanche Breakdown Voltage @ 100 μA	Max. Peak Forward Surge Current	Max. Forward Voltage Drop at Ta=25°C		Max. Reverse Current at Ta=25°C	Max. Reverse Recovery Time
	$I_{F(AV)}$ @ Ttp		V_{RRM}	$V_{BR(Min)}$	I_{FSM}	V_F @ I_F		I_R	$Trr^{(1)}$
	(A)	(°C)	(V)	(V)	(A)	(V)	(A)	(mA)	(ns)
BAX12 Series, 0.4 A, Case Type: DO-35									
BAX12	0.4	25	90	120	15	1.25	0.4	0.1	50
BAX12A	0.4	25	90	120	15	1.25	0.4	0.1	50
BYV26A Series, 1 A, Case Type: DO-41									
BYV26A	1.0	55	200	300	30	2.5	1.0	5.0	30
BYV26B	1.0	55	400	500	30	2.5	1.0	5.0	30
BYV26C	1.0	55	600	700	30	2.5	1.0	5.0	30
BYV26D	1.0	55	800	900	30	2.5	1.0	5.0	75
BYV26E	1.0	55	1000	1100	30	2.5	1.0	5.0	75
BYD33D Series, 1.3 A, Case Type: DO-41									
BYD33D	1.3	55	200	300	20	1.3	1.0	1.0	250
BYD33G	1.3	55	400	500	20	1.3	1.0	1.0	250
BYD33J	1.3	55	600	700	20	1.3	1.0	1.0	250
BYD33K	1.3	55	800	900	20	1.3	1.0	1.0	300
BYD33M	1.3	55	1000	1100	20	1.3	1.0	1.0	300
BYV36 Series, 1.5 - 1.6 A, Case Type: DO-15									
BYV36A	1.6	60	200	300	30	1.35	1.0	5.0	100
BYV36B	1.6	60	400	500	30	1.35	1.0	5.0	100
BYV36C	1.6	60	600	700	30	1.35	1.0	5.0	100
BYV36D	1.5	60	800	900	30	1.45	1.0	5.0	150
BYV36E	1.5	60	1000	1100	30	1.45	1.0	5.0	150
BYV95 Series, 1.5 A, Case Type: D2									
BYV95A	1.5	55	200	300	35	1.6	3.0	5.0	250
BYV95B	1.5	55	400	500	35	1.6	3.0	5.0	250
BYV95C	1.5	55	600	700	35	1.6	3.0	5.0	250
BYV96D	1.5	55	800	900	35	1.6	3.0	5.0	300
BYV96E	1.5	55	1000	1100	35	1.6	3.0	5.0	300
BYG10D - M Series, 1.5 A, Case Type: SMA									
BYG10D	1.5	85	200	-	30	1.15	1.5	1.0	4μs
BYG10G	1.5	85	400	-	30	1.15	1.5	1.0	4μs
BYG10J	1.5	85	600	-	30	1.15	1.5	1.0	4μs
BYG10K	1.5	85	800	-	30	1.15	1.5	1.0	4μs
BYG10M	1.5	85	1000	-	30	1.15	1.5	1.0	4μs

Note : (1) Reverse Recovery test conditions : I_F = 0.5A, I_R = 1 A, Irr = 0.25 A

Avalanche Fast Recovery Rectifier Diodes

The plastic material carries U/L recognition 94V-0.

Type No.	Max. Average Forward Rectified Current		Max. Repetitive Peak Reverse Voltage	Min. Avalanche Breakdown Voltage @ 100 μA	Max. Peak Forward Surge Current	Max. Forward Voltage Drop at Ta=25°C		Max. Reverse Current at Ta=25°C	Max. Reverse Recovery Time
	$I_{F(AV)}$ @ Ttp		V_{RRM}	$V_{BR(Min)}$	I_{FSM}	V_F @ I_F		I_R	$Trr^{(1)}$
	(A)	(°C)	(V)	(V)	(A)	(V)	(A)	(mA)	(ns)
BYG20D - J Series, 1.5 A, Case Type: SMA									
BYG20D	1.5	85	200	-	30	1.4	1.5	1.0	75
BYG20G	1.5	85	400	-	30	1.4	1.5	1.0	75
BYG20J	1.5	85	600	-	30	1.4	1.5	1.0	75
BYG24D - J Series, 1.5 A, Case Type: SMA									
BYG24D	1.5	95	200	-	30	1.25	1.5	1.0	140
BYG24G	1.5	95	400	-	30	1.25	1.5	1.0	140
BYG24J	1.5	95	600	-	30	1.25	1.5	1.0	140
BYD37D - M Series, 1.5 A, Case Type: MELF(Pastic)									
BYD37D	1.5	105(Ttp)	200	300	20	1.3	1.0	1.0	250
BYD37G	1.5	105(Ttp)	400	500	20	1.3	1.0	1.0	250
BYD37J	1.5	105(Ttp)	600	700	20	1.3	1.0	1.0	250
BYD37K	1.5	105(Ttp)	800	900	20	1.3	1.0	1.0	300
BYD37M	1.5	105(Ttp)	1000	1100	20	1.3	1.0	1.0	300
BYD37DA - MA Series, 1.5 A, Case Type: SMA									
BYD37DA	1.5	105(Ttp)	200	300	20	1.3	1.0	1.0	250
BYD37GA	1.5	105(Ttp)	400	500	20	1.3	1.0	1.0	250
BYD37JA	1.5	105(Ttp)	600	700	20	1.3	1.0	1.0	250
BYD37KA	1.5	105(Ttp)	800	900	20	1.3	1.0	1.0	300
BYD37MA	1.5	105(Ttp)	1000	1100	20	1.3	1.0	1.0	300
BYD57D - V Series, 1.0-1.2 A, Case Type: MELF(Pastic)									
BYD57D	1.0	85(Ttp)	200	300	5	3.6	1.0	5.0	30
BYD57G	1.0	85(Ttp)	400	500	5	3.6	1.0	5.0	30
BYD57J	1.0	85(Ttp)	600	700	5	3.6	1.0	5.0	30
BYD57K	1.0	85(Ttp)	800	900	5	3.6	1.0	5.0	75
BYD57M	1.0	85(Ttp)	1000	1100	5	3.6	1.0	5.0	75
BYD57U	1.2	85(Ttp)	1200	1300	5	2.3	1.0	5.0	150
BYD57V	1.2	85(Ttp)	1400	1500	5	2.3	1.0	5.0	150









Note : (1) Reverse Recovery test conditions : I_F = 0.5A, I_R = 1 A, Irr = 0.25 A

Avalanche Fast Recovery Rectifier Diodes

The plastic material carries U/L recognition 94V-0.

Type No.	Max. Average Forward Rectified Current		Max. Repetitive Peak Reverse Voltage	Min. Avalanche Breakdown Voltage @ 100 μA	Max. Peak Forward Surge Current	Max. Forward Voltage Drop at Ta=25°C		Max. Reverse Current at Ta=25°C	Max. Reverse Recovery Time
	$I_{F(AV)}$ @ Ttp		V_{RRM}	$V_{BR(Min)}$	I_{FSM}	V_F @ I_F		I_R	$Trr^{(1)}$
	(A)	(°C)	(V)	(V)	(A)	(V)	(A)	(mA)	(ns)

BYD77A - G Series, 1.85 - 2 A, Case Type: MELF(Plastic)



BYD77A	2.0	105(Ttp)	50	55	25	0.98	1.0	1.0	25
BYD77B	2.0	105(Ttp)	100	110	25	0.98	1.0	1.0	25
BYD77C	2.0	105(Ttp)	150	165	25	0.98	1.0	1.0	25
BYD77D	2.0	105(Ttp)	200	220	25	0.98	1.0	1.0	25
BYD77E	1.85	105(Ttp)	250	275	25	1.05	1.0	1.0	50
BYD77F	1.85	105(Ttp)	300	330	25	1.05	1.0	1.0	50
BYD77G	1.85	105(Ttp)	400	440	25	1.05	1.0	1.0	50

BYD77AA - GA Series, 1.85 - 2 A, Case Type: SMA



BYD77AA	2.0	105(Ttp)	50	55	25	0.98	1.0	1.0	25
BYD77BA	2.0	105(Ttp)	100	110	25	0.98	1.0	1.0	25
BYD77CA	2.0	105(Ttp)	150	165	25	0.98	1.0	1.0	25
BYD77DA	2.0	105(Ttp)	200	220	25	0.98	1.0	1.0	25
BYD77EA	1.85	105(Ttp)	250	275	25	1.05	1.0	1.0	50
BYD77FA	1.85	105(Ttp)	300	330	25	1.05	1.0	1.0	50
BYD77GA	1.85	105(Ttp)	400	440	25	1.05	1.0	1.0	50

BYV27 Series, 2 A, Case Type: DO-41



BYV27-100	2.0	85	100	110	50	1.07	3.0	1.0	25
BYV27-150	2.0	85	150	165	50	1.07	3.0	1.0	25
BYV27-200	2.0	85	200	220	50	1.07	3.0	1.0	25

BYW95 Series, 3.0 A, Case Type: DO-201AD



BYW95A	3.0	55	200	300	70	1.5	5.0	5.0	250
BYW95B	3.0	55	400	500	70	1.5	5.0	5.0	250
BYW95C	3.0	55	600	700	70	1.5	5.0	5.0	250
BYW96D	3.0	55	800	900	70	1.5	5.0	5.0	300
BYW96E	3.0	55	1000	1100	70	1.5	5.0	5.0	300

Note :

(1) Reverse Recovery test conditions : I_F = 0.5A, I_R = 1 A, Irr = 0.25 A

Fast Recovery Rectifier Diodes

The plastic material carries U/L recognition 94V-0.

Type No.		Max. Average Forward Rectified Current		Max. Repetitive Peak Reverse Voltage	Max. Repetitive Peak Forward Current	Max. Surge Forward Current	Max. Forward Voltage Drop at Ta=25°C		Max. Reverse Current at Ta=25°C	Max. Reverse Recovery Time
		$I_{F(AV)}$ @	Ta	V_{RRM}	I_{FRM}	I_{FSM}	V_F @	I_F	I_R	Trr
Axial Lead	SMD	(A)	(°C)	(V)	(A)	(A)	(V)	(A)	(μA)	(ns)
1F1 Series, 1 A, Case Type: R-1										
1F1		1.0	50	50	-	30	1.3	1.0	5.0	150(1)
1F2		1.0	50	100	-	30	1.3	1.0	5.0	150(1)
1F3		1.0	50	200	-	30	1.3	1.0	5.0	150(1)
1F4		1.0	50	400	-	30	1.3	1.0	5.0	150(1)
1F5		1.0	50	600	-	30	1.3	1.0	5.0	250(1)
1F6		1.0	50	800	-	30	1.3	1.0	5.0	500(1)
1F7		1.0	50	1000	-	30	1.3	1.0	5.0	500(1)
ERA34-10/EP01C 0.1 - 0.2 A, Case Type: DO-41										
ERA34-10		0.10	60	1000	-	2.0	3.0	0.1	50	150(3)
EP01C		0.20	25	1000	-	5.0	4.0	0.2	5.0	200(3)
AP01C		0.20	25	1000	-	5.0	4.0	0.2	100	200(3)
EU1 Series, 0.2 - 0.25 A, Case Type: DO-41										
EU1Z		0.25	25	200	-	15	2.5	0.25	10	400(2)
EU1		0.25	25	400	-	15	2.5	0.25	10	400(2)
EU1A		0.25	25	600	-	15	2.5	0.25	10	400(2)
EU1C		0.20	25	1000	-	15	2.5	0.20	10	400(2)
RU1 Series, 0.2 - 0.25 A, Case Type: D2										
RU1		0.25	50	400	-	15	2.5	0.25	10	400(2)
RU1A		0.25	50	600	-	15	2.5	0.25	10	400(2)
RU1B		0.25	50	800	-	15	2.5	0.25	10	400(2)
RU1C		0.20	50	1000	-	15	3.0	0.20	10	400(2)
AU01 Series, 0.5 A, Case Type: DO-41										
AU01		0.5	25	400	-	15	1.7	0.5	10	400(2)
AU01A		0.5	25	600	-	15	1.7	0.5	10	400(2)
AU01Z		0.5	25	200	-	15	1.7	0.5	10	400(2)
ERA22-02 Series, 0.5 A, Case Type: DO-41										
ERA22-02		0.5	40	200	-	10	1.5	0.5	10	400(3)
ERA22-04		0.5	40	400	-	10	1.5	0.5	10	400(3)
ERA22-06		0.5	40	600	-	10	1.5	0.5	10	400(3)
ERA22-08		0.5	40	800	-	10	1.5	0.5	10	400(3)
ERA22-10		0.5	40	1000	-	10	1.5	0.5	10	400(3)
ERB43-02 Series, 0.5 A, Case Type: DO-41										
ERB43-02		0.5	40	200	-	10	1.2	0.5	10	400(3)
ERB43-04		0.5	40	400	-	10	1.2	0.5	10	400(3)
ERB43-06		0.5	40	600	-	10	1.2	0.5	10	400(3)
ERB43-08		0.5	40	800	-	10	1.2	0.5	10	400(3)















Notes: (1) Reverse recovery test conditions : I_F = 0.5 A, I_R = 1 A, with Irr = 0.25 A

(2) Reverse recovery test conditions : I_F = 10 mA, I_R = 10 mA recover to 1 mA

(3) Reverse recovery test conditions : I_F = 100 mA, I_R = 100 mA

Fast Recovery Rectifier Diodes

The plastic material carries U/L recognition 94V-0.

Type No.		Max. Average Forward Rectified Current		Max. Repetitive Peak Reverse Voltage	Max. Repetitive Peak Forward Current	Max. Surge Forward Current	Max. Forward Voltage Drop at Ta=25°C		Max. Reverse Current at Ta=25°C	Max. Reverse Recovery Time	
		$I_{F(AV)}$ @ Ta		V_{RRM}	I_{FRM}	I_{FSM}	V_F @ I_F		I_R	Trr	
Axial Lead	SMD	(A)	(°C)	(V)	(A)	(A)	(V)	(A)	(μA)	(ns)	

TVR1 Series, 0.5 A, Case Type: DO-41



TVR1B		0.5	60	100	-	10	1.2	0.5	10	75[1]	300[3]
TVR1G		0.5	60	400	-	10	1.2	0.5	10	75[1]	300[3]
TVR1J		0.5	60	600	-	10	1.2	0.5	10	75[1]	300[3]

TVR2 Series, 0.5 A, Case Type: D2



TVR2B		0.5	60	100	-	30	1.4	1.0	10	20[4]
TVR2D		0.5	60	200	-	30	1.4	1.0	10	20[4]
TVR2G		0.5	60	400	-	30	1.4	1.0	10	20[4]
TVR2J		0.5	60	600	-	30	1.4	1.0	10	20[4]

S5295B Series , 0.5 A, Case Type: DO-41



S5295B		0.5	25	100	-	30	1.5	1.0	10	1.5μs [4]
S5295G		0.5	25	400	-	30	1.5	1.0	10	1.5μs [4]
S5295J		0.5	25	600	-	30	1.5	1.0	10	1.5μs [4]

05NU41 Series, 0.5 A, Case Type: DO-41



05NU41		0.5	25	1000	-	10	3.0	0.5	100	100[5]
05NU42		0.5	25	1000	-	10	3.0	0.5	100	100[5]

RH1 Series, 0.6 A, Case Type: D2



RH1		0.6	50	400	-	35	1.3	0.6	5.0	4μs[2]
RH1A		0.6	50	600	-	35	1.3	0.6	5.0	4μs[2]
RH1B		0.6	50	800	-	35	1.3	0.6	5.0	4μs[2]
RH1C		0.6	50	1000	-	35	1.3	0.6	5.0	4μs[2]

ES1 Series, 0.5 - 0.7 A, Case Type: DO-41



ES1Z		0.7	25	200	-	30	2.5	0.8	10	1.5μs [2]
ES1		0.7	25	400	-	30	2.5	0.8	10	1.5μs [2]
ES1 A		0.7	25	600	-	30	2.5	0.8	10	1.5μs [2]
ES1F		0.5	50	1500		20	2.0	0.5	10	1.5μs [2]

AU02 Series, 0.8 A, Case Type: DO-41



AU02		0.8	25	400	-	25	1.3	0.8	10	400[3]
AU02A		0.8	25	600	-	25	1.3	0.8	10	400[3]
AU02Z		0.8	25	200	-	25	1.3	0.8	10	400[3]

Notes :

(1) Reverse recovery test conditions : I_F = 0.5 A, I_R = 1 A, with Irr = 0.25 A

(2) Reverse recovery test conditions : I_F = 10 mA, I_R = 10 mA recover to 1 mA

(3) Reverse recovery test conditions : I_F = 100 mA, I_R = 100 mA

(4) Reverse recovery test conditions : I_F = 20 mA, I_R = 1 mA

(5) Reverse recovery test conditions : I_F = 1 A, di/dt = -30 A/ms.

Fast Recovery Rectifier Diodes

The plastic material carries U/L recognition 94V-0.

Type No.		Max. Average Forward Rectified Current		Max. Repetitive Peak Reverse Voltage	Max. Repetitive Peak Forward Current	Max. Surge Forward Current	Max. Forward Voltage Drop at Ta=25°C		Max. Reverse Current at Ta=25°C	Max. Reverse Recovery Time	
		$I_{F(AV)}$ @	Ta	V_{RRM}	I_{FRM}	I_{FSM}	V_F @	I_F	I_R	Trr	
Axial Lead	SMD	(A)	(°C)	(V)	(A)	(A)	(V)	(A)	(μA)	(ns)	

ERB38-04 Series, 0.8 A, Case Type: DO-41



ERB38-04		0.8	25	400	-	20	2.5	0.8	50	50[4]	
ERB38-05		0.8	25	500	-	20	2.5	0.8	50	50[4]	
ERB38-06		0.8	25	600	-	20	2.5	0.8	50	50[4]	

1SR153-100 Series, 0.8 A, Case Type: DO-41



1SR153-100		0.8	55	100	-	30	1.3	0.8	10	400[3]	250[1]
1SR153-200		0.8	55	200	-	30	1.3	0.8	10	400[3]	250[1]
1SR153-400		0.8	55	400	-	30	1.3	0.8	10	400[3]	250[1]

1SR124-100 Series, 1 A, Case Type: DO-41



1SR124-100		1.0	55	100	-	30	1.3	1.0	10	400[3]	250[1]
1SR124-200		1.0	55	200	-	30	1.3	1.0	10	400[3]	250[1]
1SR124-400		1.0	55	400	-	30	1.3	1.0	10	400[3]	250[1]

ERB44-02 Series, 1 A, Case Type: DO-41



ERB44-02		1.0	40	200	-	30	1.1	1.0	10	400[2]
ERB44-04		1.0	40	400	-	30	1.1	1.0	10	400[2]
ERB44-06		1.0	40	600	-	30	1.1	1.0	10	400[2]
ERB44-08		1.0	40	800	-	30	1.1	1.0	10	400[2]
ERB44-10		1.0	40	1000	-	30	1.1	1.0	10	400[2]

EU2 Series, 1 - 1.2 A, Case Type: DO-41



EU2YX		1.2	25	70	-	25	0.9	1.2	10	200[3]
EU2Z		1.0	25	200	-	15	1.4	1.0	10	400[3]
EU2		1.0	25	400	-	15	1.4	1.0	10	400[3]
EU2A		1.0	25	600	-	15	1.4	1.0	10	400[3]

RGP10A Series, 1 A, Case Type: DO-41



RGP10A		1.0	55	50	-	30	1.3	1.0	5.0	150[1]
RGP10B		1.0	55	100	-	30	1.3	1.0	5.0	150[1]
RGP10D		1.0	55	200	-	30	1.3	1.0	5.0	150[1]
RGP10G		1.0	55	400	-	30	1.3	1.0	5.0	150[1]
RGP10J		1.0	55	600	-	30	1.3	1.0	5.0	250[1]
RGP10K		1.0	55	800	-	30	1.3	1.0	5.0	500[1]
RGP10M		1.0	55	1000	-	30	1.3	1.0	5.0	500[1]

10ELS1 Series, 1 A, Case Type: D2



10ELS1		1.0	25	100	-	30	1.10	1.0	10	150[1]
10ELS2		1.0	25	200	-	30	1.10	1.0	10	150[1]
10ELS4		1.0	25	400	-	50	1.15	1.0	10	150[1]
10ELS6		1.0	25	600	-	50	1.15	1.0	10	150[1]

Notes: (1) Reverse recovery test conditions : I_F = 0.5 A, I_R = 1 A, with Irr = 0.25 A

(2) Reverse recovery test conditions : I_F = 100 mA, I_R = 100 mA

(3) Reverse recovery test conditions : I_F = 10 mA, I_R = 10 mA recover to 1 mA

(4) Reverse recovery test conditions : I_F = 100 mA, I_R = 200 mA

Fast Recovery Rectifier Diodes

The plastic material carries U/L recognition 94V-0.

Type No.		Max. Average Forward Rectified Current		Max. Repetitive Peak Reverse Voltage	Max. Repetitive Peak Forward Current	Max. Surge Forward Current	Max. Forward Voltage Drop at Ta=25°C		Max. Reverse Current at Ta=25°C	Max. Reverse Recovery Time	
		$I_{F(AV)}$ @ Ta		V_{RRM}	I_{FRM}	I_{FSM}	V_F @ I_F		I_R	Trr	
Axial Lead	SMD	(A)	(°C)	(V)	(A)	(A)	(V)	(A)	(μA)	(ns)	
BA157/SRA7 Series, 1 A, Case Type: DO-41/SMA											
BA157	**SRA7**	1.0	45	400	5.0	35	1.3	1.0	5.0	300(2)	150(1)
BA158	**SRA8**	1.0	45	600	5.0	35	1.3	1.0	5.0	300(2)	150(1)
BA159	**SRA9**	1.0	45	1000	5.0	35	1.3	1.0	5.0	500(2)	250(1)
FR101/SR1A Series, 1 A, Case Type: DO-41/SMA											
FR101	**SR1A**	1.0	55	50	5.0	35	1.3	1.0	5.0	150(1)	
FR102	**SR1B**	1.0	55	100	5.0	35	1.3	1.0	5.0	150(1)	
FR103	**SR1D**	1.0	55	200	5.0	35	1.3	1.0	5.0	150(1)	
FR104	**SR1G**	1.0	55	400	5.0	35	1.3	1.0	5.0	150(1)	
FR105	**SR1J**	1.0	55	600	5.0	35	1.3	1.0	5.0	250(1)	
FR106	**SR1K**	1.0	55	800	5.0	35	1.3	1.0	5.0	500(1)	
FR107	**SR1M**	1.0	55	1000	5.0	35	1.3	1.0	5.0	500(1)	
FR107-STR	**-**	1.0	55	1000	5.0	35	1.3	1.0	5.0	250(1)	
RS1 Series, 1 A, Case Type: SMA											
	RS1A	1.0	90	50	-	30	1.30	1.0	5.0	150(1)	
	RS1B	1.0	90	100	-	30	1.30	1.0	5.0	150(1)	
	RS1D	1.0	90	200	-	30	1.30	1.0	5.0	150(1)	
	RS1G	1.0	90	400	-	30	1.30	1.0	5.0	150(1)	
	RS1J	1.0	90	600	-	30	1.30	1.0	5.0	250(1)	
	RS1K	1.0	90	800	-	30	1.30	1.0	5.0	500(1)	
	RS1M	1.0	90	1000	-	30	1.30	1.0	5.0	500(1)	
1N4933/SRN3 Series, 1 A, Case Type: DO-41/SMA											
1N4933	**SRN3**	1.0	50	50	5.0	30	1.2	1.0	5.0	150(1)	
1N4934	**SRN4**	1.0	50	100	5.0	30	1.2	1.0	5.0	150(1)	
1N4935	**SRN5**	1.0	50	200	5.0	30	1.2	1.0	5.0	150(1)	
1N4936	**SRN6**	1.0	50	400	5.0	30	1.2	1.0	5.0	150(1)	
1N4937	**SRN7**	1.0	50	600	5.0	30	1.2	1.0	5.0	150(1)	
DL4933 Series, 1 A, Case Type: MELF (Plastic)											
	DL4933	1.0	55	50	-	30	1.2	1.0	5.0	150(1)	
	DL4934	1.0	55	100	-	30	1.2	1.0	5.0	150(1)	
	DL4935	1.0	55	200	-	30	1.2	1.0	5.0	150(1)	
	DL4936	1.0	55	400	-	30	1.2	1.0	5.0	150(1)	
	DL4937	1.0	55	600	-	30	1.2	1.0	5.0	150(1)	
RGF1A Series, 1 A, Case Type: SMA											
	RGF1A	1.0	125 (T_L)	50	-	30	1.3	1.0	5.0	150(1)	
	RGF1B	1.0	125 (T_L)	100	-	30	1.3	1.0	5.0	150(1)	
	RGF1D	1.0	125 (T_L)	200	-	30	1.3	1.0	5.0	150(1)	
	RGF1G	1.0	125 (T_L)	400	-	30	1.3	1.0	5.0	150(1)	
	RGF1J	1.0	125 (T_L)	600	-	30	1.3	1.0	5.0	250(1)	
	RGF1K	1.0	125 (T_L)	800	-	30	1.3	1.0	5.0	500(1)	
	RGF1M	1.0	125 (T_L)	1000	-	30	1.3	1.0	5.0	500(1)	

Notes :

(1) Reverse recovery test conditions : I_F = 0.5 A, I_R = 1 A, with Irr = 0.25 A

(2) Reverse recovery test conditions : I_F = 10 mA, I_R = 10 mA recover to 1 mA

Fast Recovery Rectifier Diodes

The plastic material carries U/L recognition 94V-0.

Type No.		Max. Average Forward Rectified Current		Max. Repetitive Peak Reverse Voltage	Max. Repetitive Peak Forward Current	Max. Surge Forward Current	Max. Forward Voltage Drop at Ta=25°C		Max. Reverse Current at Ta=25°C	Max. Reverse Recovery Time
		$I_{F(AV)}$ @ Ta		V_{RRM}	I_{FRM}	I_{FSM}	V_F @ I_F		I_R	Trr
Axial Lead	SMD	(A)	(°C)	(V)	(A)	(A)	(V)	(A)	(μA)	(ns)
RU2 Series, 1 - 1.5 A, Case Type: D2										
RU2Z		1.0	50	200	5.0	20	1.50	1.0	10	400(2)
RU2		1.0	50	600	5.0	20	1.50	1.0	10	400(2)
RU2B		1.0	50	800	5.0	20	1.50	1.0	10	400(2)
RU2M		1.1	50	400	5.0	20	1.20	1.1	10	400(2)
RU2AM		1.1	50	600	5.0	20	1.20	1.1	10	400(2)
RU2YX		1.5	50	100	5.0	30	0.95	1.5	10	200(2)
RU20A		1.5	25	600	-	50	1.10	1.5	10	400(3)
RGL1A Series, 1 A, Case Type: Mini MELF (Plastic)										
	RGL1A	1.0	75	50	-	25	1.30	1.0	5.0	150(1)
	RGL1B	1.0	75	100	-	25	1.30	1.0	5.0	150(1)
	RGL1D	1.0	75	200	-	25	1.30	1.0	5.0	150(1)
	RGL1G	1.0	75	400	-	25	1.30	1.0	5.0	150(1)
	RGL1J	1.0	75	600	-	25	1.30	1.0	5.0	250(1)
	RGL1K	1.0	75	800	-	25	1.30	1.0	5.0	500(1)
	RGL1M	1.0	75	1000	-	25	1.30	1.0	5.0	500(1)
15DF4 Series, 1.3 A, Case Type: D2										
15DF4		1.3	40	400	-	70	1.2	1.3	10	150(1)
15DF6		1.3	40	600	-	70	1.2	1.3	10	150(1)
15DF8		1.3	40	800	-	70	1.2	1.3	10	150(1)
BYT52A Series, 1.4 A, Case Type: D2										
BYT52A		1.4	25(T_L)	50	-	50	1.3	1.0	10	200(1)
BYT52B		1.4	25(T_L)	100	-	50	1.3	1.0	10	200(1)
BYT52D		1.4	25(T_L)	200	-	50	1.3	1.0	10	200(1)
BYT52G		1.4	25(T_L)	400	-	50	1.3	1.0	10	200(1)
BYT52J		1.4	25(T_L)	600	-	50	1.3	1.0	10	200(1)
BYT52K		1.4	25(T_L)	800	-	50	1.3	1.0	10	200(1)
BYT52M		1.4	25(T_L)	1000	-	50	1.3	1.0	10	200(1)
RGP15A Series, 1.5 A, Case Type: D2										
RGP15A		1.5	55	50	-	50	1.3	1.5	5.0	150(1)
RGP15B		1.5	55	100	-	50	1.3	1.5	5.0	150(1)
RGP15D		1.5	55	200	-	50	1.3	1.5	5.0	150(1)
RGP15G		1.5	55	400	-	50	1.3	1.5	5.0	150(1)
RGP15J		1.5	55	600	-	50	1.3	1.5	5.0	250(1)
RGP15K		1.5	55	800	-	50	1.3	1.5	5.0	500(1)
RGP15M		1.5	55	1000	-	50	1.3	1.5	5.0	500(1)
FR151/SROA Series, 1.5 A, Case Type: DO-41/SMA										
FR151	**SROA**	1.5	55	50	5.0	60	1.3	1.5	5.0	150(1)
FR152	**SROB**	1.5	55	100	5.0	60	1.3	1.5	5.0	150(1)
FR153	**SROD**	1.5	55	200	5.0	60	1.3	1.5	5.0	150(1)
FR154	**SROG**	1.5	55	400	5.0	60	1.3	1.5	5.0	150(1)
FR155	**SROJ**	1.5	55	600	5.0	60	1.3	1.5	5.0	250(1)
FR156	**SROK**	1.5	55	800	5.0	60	1.3	1.5	5.0	500(1)
FR157	**SROM**	1.5	55	1000	5.0	60	1.3	1.5	5.0	500(1)
FR157-STR	**-**	1.5	55	1000	5.0	60	1.3	1.5	5.0	250(1)

Notes: (1) Reverse recovery test conditions : I_F = 0.5 A, I_R = 1 A, with Irr = 0.25 A

(2) Reverse recovery test conditions : I_F = 10 mA, I_R = 10 mA recover to 1 mA

(3) Reverse recovery test conditions : I_F = 100 mA, I_R = 100 mA

Fast Recovery Rectifier Diodes

The plastic material carries U/L recognition 94V-0.

Type No.		Max. Average Forward Rectified Current		Max. Repetitive Peak Reverse Voltage	Max. Repetitive Peak Forward Current	Max. Surge Forward Current	Max. Forward Voltage Drop at Ta=25°C		Max. Reverse Current at Ta=25°C	Max. Reverse Recovery Time
		$I_{F(AV)}$ @ Ta		V_{RRM}	I_{FRM}	I_{FSM}	V_F @ I_F		I_R	Trr
Axial Lead	SMD	(A)	(°C)	(V)	(A)	(A)	(V)	(A)	(μA)	(ns)
1R5J Series, 1.5 A, Case Type: D2										
1R5JH45		1.5	25	600	-	50	1.2	1.5	100	200(4)
1R5JU41		1.5	25	600	-	40	2.0	2.0	100	100(4)
ERD28-04 Series, 1.5 A, Case Type: D2A										
ERD28-04		1.5	25	400	-	70	1.1	1.5	10	400(3)
ERD28-06		1.5	25	600	-	70	1.1	1.5	10	400(3)
ERD28-08		1.5	25	800	-	70	1.1	1.5	10	400(3)
RU3 Series, 1.5 - 2.0 A, Case Type: D2A										
RU3		1.5	50	400	-	30	1.5	1.5	10	400(2)
RU3A		1.5	50	600	-	30	1.5	1.5	10	400(2)
RU3B		1.5	50	800	-	30	1.5	1.5	10	400(2)
RU3C		1.5	50	1000	-	30	2.0	1.5	10	400(2)
RU3M		1.5	50	400	-	30	1.1	1.5	10	400(2)
RU3AM		1.5	50	600	-	30	1.1	1.5	10	400(2)
RU3YX		2.0	25	100	-	50	0.95	2.0	10	200(2)
RU4 Series, 1.5 - 2.5 A, Case Type: DO-201AD										
RU4		1.5	50	400	-	50	1.5	3.0	10	400(2)
RU4A		1.5	50	600	-	50	1.5	3.0	10	400(2)
RU4B		1.5	50	800	-	50	1.6	3.0	10	400(2)
RU4C		1.5	50	1000	-	50	1.6	3.0	50	400(2)
RU4Y		2.0	60	100	-	70	1.3	3.5	10	400(2)
RU4Z		2.0	60	200	-	70	1.3	3.5	10	400(2)
RU4M		2.0	50	400	-	50	1.3	3.5	10	400(3)
RU4AM		2.0	50	600	-	50	1.3	3.5	10	400(3)
RU4YX		2.2	50	100	-	100	1.3	3.5	10	200(3)
RU4DS		2.5	60	1300	-	50	1.8	3.0	50	400(3)
BYW32 Series, 2 A, Case Type: D2										
BYW32		2.0	55	200	-	40	1.2	2.0	5.0	200(1)
BYW33		2.0	55	300	-	40	1.2	2.0	5.0	200(1)
BYW34		2.0	55	400	-	40	1.2	2.0	5.0	200(1)
BYW35		2.0	55	500	-	40	1.2	2.0	5.0	200(1)
BYW36		2.0	55	600	-	40	1.2	2.0	5.0	200(1)

Notes :

(1) Reverse recovery test conditions : I_F = 0.5 A, I_R = 1 A, with Irr = 0.25 A

(2) Reverse recovery test conditions : I_F = 10 mA, I_R = 10 mA recover to 1 mA

(3) Reverse recovery test conditions : I_F = 100 mA, I_R = 100 mA

(4) Reverse recovery test conditions : I_F = 1 A, di/dt = -30 A/ms

Fast Recovery Rectifier Diodes

The plastic material carries U/L recognition 94V-0.

Type No.		Max. Average Forward Rectified Current		Max. Repetitive Peak Reverse Voltage	Max. Repetitive Peak Forward Current	Max. Surge Forward Current	Max. Forward Voltage Drop at Ta=25°C		Max. Reverse Current at Ta=25°C	Max. Reverse Recovery Time	
		$I_{F(AV)}$ @	Ta	V_{RRM}	I_{FRM}	I_{FSM}	V_F @	I_F	I_R	Trr	
Axial Lead	SMD	(A)	(°C)	(V)	(A)	(A)	(V)	(A)	(μA)	(ns)	

BY296/SR26 Series, 2 A, Case Type: DO-201AD/SMB



BY296	**SR26**	2.0	50	100	10	70	1.3	2.0	10	500(2)	250(1)
BY297	**SR27**	2.0	50	200	10	70	1.3	2.0	10	500(2)	250(1)
BY298	**SR28**	2.0	50	400	10	70	1.3	2.0	10	500(2)	250(1)
BY299	**SR29**	2.0	50	800	10	70	1.3	2.0	10	500(2)	250(1)

FR201/SR2A Series, 2 A, Case Type: D2/SMB



FR201	**SR2A**	2.0	75	50	15	75	1.3	2.0	10	150(1)
FR202	**SR2B**	2.0	75	100	15	75	1.3	2.0	10	150(1)
FR203	**SR2D**	2.0	75	200	15	75	1.3	2.0	10	150(1)
FR204	**SR2G**	2.0	75	400	15	75	1.3	2.0	10	150(1)
FR205	**SR2J**	2.0	75	600	15	75	1.3	2.0	10	250(1)
FR206	**SR2K**	2.0	75	800	15	75	1.3	2.0	10	500(1)
FR207	**SR2M**	2.0	75	1000	15	75	1.3	2.0	10	500(1)
FR207-STR	**-**	2.0	75	1000	15	75	1.3	2.0	10	250(1)

RGP20A-J Series, 2 A, Case Type: D2A



RGP20A		2.0	55	50	-	80	1.3	2.0	5.0	150 (1)
RGP20B		2.0	55	100	-	80	1.3	2.0	5.0	150 (1)
RGP20D		2.0	55	200	-	80	1.3	2.0	5.0	150 (1)
RGP20G		2.0	55	400	-	80	1.3	2.0	5.0	150 (1)
RGP20J		2.0	55	600	-	80	1.3	2.0	5.0	250 (1)

FR251/SRTA Series, 2.5 A, Case Type: D2A/SMB



FR251	**SRTA**	2.5	75	50	15	100	1.3	2.5	10	150(1)
FR252	**SRTB**	2.5	75	100	15	100	1.3	2.5	10	150(1)
FR253	**SRTD**	2.5	75	200	15	100	1.3	2.5	10	150(1)
FR254	**SRTG**	2.5	75	400	15	100	1.3	2.5	10	150(1)
FR255	**SRTJ**	2.5	75	600	15	100	1.3	2.5	10	250(1)
FR256	**SRTK**	2.5	75	800	15	100	1.3	2.5	10	500(1)
FR257	**SRTM**	2.5	75	1000	15	100	1.3	2.5	10	500(1)
FR257-STR	**-**	2.5	75	1000	15	100	1.3	2.5	10	250(1)

BY228/SR36 Series, 3 A, Case Type: DO-201AD/SMC



BY396	**SR36**	3.0	50	100	15	100	1.25	3.0	10	500(2)	250(1)
BY397	**SR37**	3.0	50	200	15	100	1.25	3.0	10	500(2)	250(1)
BY398	**SR38**	3.0	50	400	15	100	1.25	3.0	10	500(2)	250(1)
BY399	**SR39**	3.0	50	800	15	100	1.25	3.0	10	500(2)	250(1)

Notes :

(1) Reverse recovery test conditions : I_F = 0.5 A, I_R = 1 A, with Irr = 0.25 A

(2) Reverse recovery test conditions : I_F = 10 mA, I_R = 10 mA recover to 1 mA

Fast Recovery Rectifier Diodes

The plastic material carries U/L recognition 94V-0.

Type No.		Max. Average Forward Rectified Current		Max. Repetitive Peak Reverse Voltage	Max. Repetitive Peak Forward Current	Max. Surge Forward Current	Max. Forward Voltage Drop at Ta=25°C		Max. Reverse Current at Ta=25°C	Max. Reverse Recovery Time	
		$I_{F(AV)}$ @	Ta	V_{RRM}	I_{FRM}	I_{FSM}	V_F @	I_F	I_R	Trr	
Axial Lead	SMD	(A)	(°C)	(V)	(A)	(A)	(V)	(A)	(μA)	(ns)	

BYT56A Series, 3 A, Case Type: DO-201AD



BYT56A		3.0	50	50	-	80	1.4	3.0	5.0	100(1)
BYT56B		3.0	50	100	-	80	1.4	3.0	5.0	100(1)
BYT56D		3.0	50	200	-	80	1.4	3.0	5.0	100(1)
BYT56G		3.0	50	400	-	80	1.4	3.0	5.0	100(1)
BYT56J		3.0	50	600	-	80	1.4	3.0	5.0	100(1)
BYT56K		3.0	50	800	-	80	1.4	3.0	5.0	100(1)
BYT56M		3.0	50	1000	-	80	1.4	3.0	5.0	100(1)

FR301/SR3A Series, 3 A, Case Type: DO-201AD/SMC



FR301	**SR3A**	3.0	55	50	20	200	1.3	3.0	10	150(1)
FR302	**SR3B**	3.0	55	100	20	200	1.3	3.0	10	150(1)
FR303	**SR3D**	3.0	55	200	20	200	1.3	3.0	10	150(1)
FR304	**SR3G**	3.0	55	400	20	200	1.3	3.0	10	150(1)
FR305	**SR3J**	3.0	55	600	20	200	1.3	3.0	10	250(1)
FR306	**SR3K**	3.0	55	800	20	200	1.3	3.0	10	500(1)
FR307	**SR3M**	3.0	55	1000	20	200	1.3	3.0	10	500(1)
FR307-STR		3.0	55	1000	20	200	1.3	3.0	10	250(1)

RS3A Series, 3 A, Case Type: SMC



	RS3A	3.0	55	50	-	100	1.3	3.0	10	150(1)
	RS3B	3.0	55	100	-	100	1.3	3.0	10	150(1)
	RS3D	3.0	55	200	-	100	1.3	3.0	10	150(1)
	RS3G	3.0	55	400	-	100	1.3	3.0	10	150(1)
	RS3J	3.0	55	600	-	100	1.3	3.0	10	250(1)
	RS3K	3.0	55	800	-	100	1.3	3.0	10	500(1)

MR850/SRR0 Series, 3 A, Case Type: DO-201AD/SMC



MR850	**SRR0**	3.0	90	50	15	100	1.25	3.0	10	200(2)	150(1)
MR851	**SRR1**	3.0	90	100	15	100	1.25	3.0	10	200(2)	150(1)
MR852	**SRR2**	3.0	90	200	15	100	1.25	3.0	10	200(2)	150(1)
MR854	**SRR4**	3.0	90	400	15	100	1.25	3.0	10	200(2)	150(1)
MR856	**SRR6**	3.0	90	600	15	100	1.25	3.0	10	200(2)	150(1)
MR858	-	3.0	90	800	15	100	1.25	3.0	10	200(2)	150(1)

3JH45 Series, 3 A, Case Type: DO-201AD



3JH45	-	3.0	25	600	-	77	1.2	3.0	100	200(4)
30DF6	-	3.0	40	600	-	90	1.25	3.0	10	200(3)

Notes :

(1) Reverse recovery test conditions : I_F = 0.5 A, I_R = 1 A, with Irr = 0.25 A

(2) Reverse recovery test conditions : I_F = 1 A, to V_R = 30 V

(3) Reverse Recovery test conditions : I_F = 1 A, to V_R = 30 V

(4) Reverse Recovery test conditions : I_F = 1 A, di/dt = -30 A/ms

Fast Recovery Rectifier Diodes

The plastic material carries U/L recognition 94V-0.

Type No.		Max. Average Forward Rectified Current		Max. Repetitive Peak Reverse Voltage	Max. Repetitive Peak Forward Current	Max. Surge Forward Current	Max. Forward Voltage Drop at Ta=25°C		Max. Reverse Current at Ta=25°C	Max. Reverse Recovery Time
		$I_{F(AV)}$ @	Ta	V_{RRM}	I_{FRM}	I_{FSM}	V_F @	I_F	I_R	Trr
Axial Lead	SMD	(A)	(°C)	(V)	(A)	(A)	(V)	(A)	(μA)	(ns)
RGP30 Series, 3 A, Case Type: DO-201AD										
RGP30A		3.0	55	50	-	125	1.30	3.0	5.0	150(1)
RGP30B		3.0	55	100	-	125	1.30	3.0	5.0	150(1)
RGP30D		3.0	55	200	-	125	1.30	3.0	5.0	150(1)
RGP30G		3.0	55	400	-	125	1.30	3.0	5.0	150(1)
RGP30J		3.0	55	600	-	125	1.30	3.0	5.0	150(1)
RGP30K		3.0	55	800	-	125	1.30	3.0	5.0	250(1)
RGP30M		3.0	55	1000	-	125	1.30	3.0	5.0	500(1)
1N5415 Series, 3 A, Case Type: D2A										
1N5415		3.0	55	50	-	80	1.1	3.0	1.0	150(1)
1N5416		3.0	55	100	-	80	1.1	3.0	1.0	150(1)
1N5417		3.0	55	200	-	80	1.1	3.0	1.0	150(1)
1N5418		3.0	55	400	-	80	1.1	3.0	1.0	150(1)
1N5419		3.0	55	500	-	80	1.1	3.0	1.0	250(1)
1N5420		3.0	55	600	-	80	1.1	3.0	1.0	400(1)
FR501 Series, 5 A, Case Type: DO-201AD										
FR501	-	5.0	75	50	-	300	1.3	5.0	10	150(1)
FR502	-	5.0	75	100	-	300	1.3	5.0	10	150(1)
FR503	-	5.0	75	200	-	300	1.3	5.0	10	150(1)
FR504	-	5.0	75	400	-	300	1.3	5.0	10	150(1)
FR505	-	5.0	75	600	-	300	1.3	5.0	10	250(1)
FR506	-	5.0	75	800	-	300	1.3	5.0	10	500(1)
FR507	-	5.0	75	1000	-	300	1.3	5.0	10	500(1)
FR601 Series, 6 A, Case Type: D6										
FR601	-	6.0	55	50	-	200	1.3	6.0	10	150(1)
FR602	-	6.0	55	100	-	200	1.3	6.0	10	150(1)
FR603	-	6.0	55	200	-	200	1.3	6.0	10	150(1)
FR604	-	6.0	55	400	-	200	1.3	6.0	10	150(1)
FR605	-	6.0	55	600	-	200	1.3	6.0	10	250(1)
FR606	-	6.0	55	800	-	200	1.3	6.0	10	500(1)
FR607	-	6.0	55	1000	-	200	1.3	6.0	10	500(1)
FR801 Series, 8 A, Case Type: D6										
FR801	-	8.0	100 (Tc)	50	-	150	1.3	8.0	10	150(1)
FR802	-	8.0	100 (Tc)	100	-	150	1.3	8.0	10	150(1)
FR803	-	8.0	100 (Tc)	200	-	150	1.3	8.0	10	150(1)
FR804	-	8.0	100 (Tc)	400	-	150	1.3	8.0	10	150(1)
FR805	-	8.0	100 (Tc)	600	-	150	1.3	8.0	10	250(1)











Note :

(1) Reverse Recovery test conditions : I_F = 0.5 A, I_R = 1 A, with Irr = 0.25 A

Fast Recovery Rectifier Diodes

The plastic material carries U/L recognition 94V-0.

Type No.		Max. Average Forward Rectified Current		Max. Repetitive Peak Reverse Voltage	Max. Repetitive Peak Forward Current	Max. Surge Forward Current	Max. Forward Voltage Drop at Ta=25°C		Max. Reverse Current at Ta=25°C	Max. Reverse Recovery Time
		$I_{F(AV)}$ @ Ta		V_{RRM}	I_{FRM}	I_{FSM}	V_F @ I_F		I_R	Trr
Axial Lead	SMD	(A)	(°C)	(V)	(A)	(A)	(V)	(A)	(μA)	(ns)

ESAC25 Series, 10 A, Case Type: TO - 220AB

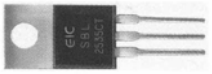

ESAC25-02C	-	10	106 (Tc)	200	-	70	1.3	2.5	10	400(2)
ESAC25-02D	-	10	106 (Tc)	200	-	70	1.3	2.5	10	400(2)
ESAC25-02N	-	10	106 (Tc)	200	-	70	1.3	2.5	10	400(2)
ESAC25-04C	-	10	106 (Tc)	400	-	70	1.3	2.5	10	400(2)
ESAC25-04D	-	10	106 (Tc)	400	-	70	1.3	2.5	10	400(2)
ESAC25-04N	-	10	106 (Tc)	400	-	70	1.3	2.5	10	400(2)

F1200A Series, 12 A, Case Type: D6



F1200A		12	50	50	80	390	0.85	5.0	25	200(1)
F1200D		12	50	200	80	390	0.85	5.0	25	200(1)

FTB2000AA /FTB2000KG, 20 A, Case Type: D2PAK



	FTB2000KA/AA(3)	20	100 (Tc)	50	80	390	0.96	20.0	25	200(1)
	FTB2000KB/AB(3)	20	100 (Tc)	100	80	390	0.96	20.0	25	200(1)
	FTB2000KD/AD(3)	20	100 (Tc)	200	80	390	0.96	20.0	25	200(1)
	FTB2000KG/AG(3)	20	100 (Tc)	400	80	390	0.96	20.0	25	200(1)

Notes :

(1) Reverse Recovery test conditions : I_F = 0.5 A, I_R = 1 A, with Irr = 0.25 A

(2) Reverse Recovery test conditions : I_F = 100 mA, I_R = 100 mA

(3) K (Standard) is p/n FTB2000KA, FTB2000KB, …, KG , A (Reverse) is p/n FTB2000AA, FTB2000AB, …, AG

Fast Recovery Glass Passivated Rectifier Diodes

The plastic material carries U/L recognition 94V-0.

Type No.		Max. Average Forward Rectified Current		Max. Repetitive Peak Reverse Voltage	Max. Repetitive Peak Forward Current	Max. Surge Forward Current	Max. Forward Voltage Drop at Ta=25°C		Max. Reverse Current at Ta=25°C	Max. Reverse Recovery Time
		$I_{F(AV)}$ @ Ta		V_{RRM}	I_{FRM}	I_{FSM}	V_F @ I_F		I_R	$Trr^{(1)}$
Axial Lead	SMD	(A)	(°C)	(V)	(A)	(A)	(V)	(A)	(μA)	(ns)
LMR1A Series, 1 A, Case Type: M1A										
LMR1A		1.0	50	50	-	30	1.0	1.0	5.0	150
LMR1B		1.0	50	100	-	30	1.0	1.0	5.0	150
LMR1D		1.0	50	200	-	30	1.0	1.0	5.0	150
LMR1G		1.0	50	400	-	30	1.0	1.0	5.0	150
LMR1J		1.0	50	600	-	30	1.0	1.0	5.0	250
LMR1K		1.0	50	800	-	30	1.0	1.0	5.0	500
LMR1M		1.0	50	1000	-	30	1.0	1.0	5.0	500
FR101G/GR1A Series, 1 A, Case Type: DO-41/SMA										
FR101G	**GR1A**	1.0	55	50	5.0	30	1.3	1.0	5.0	150
FR102G	**GR1B**	1.0	55	100	5.0	30	1.3	1.0	5.0	150
FR103G	**GR1D**	1.0	55	200	5.0	30	1.3	1.0	5.0	150
FR104G	**GR1G**	1.0	55	400	5.0	30	1.3	1.0	5.0	150
FR105G	**GR1J**	1.0	55	600	5.0	30	1.3	1.0	5.0	250
FR106G	**GR1K**	1.0	55	800	5.0	30	1.3	1.0	5.0	500
FR107G	**GR1M**	1.0	55	1000	5.0	30	1.3	1.0	5.0	500
FR107G-STR	**-**	1.0	55	1000	5.0	30	1.3	1.0	5.0	250
FR151G Series, 1.5 A, Case Type: DO-41										
FR151G		1.5	55	50	-	60	1.4	1.5	5.0	150
FR152G		1.5	55	100	-	60	1.4	1.5	5.0	150
FR153G		1.5	55	200	-	60	1.4	1.5	5.0	150
FR154G		1.5	55	400	-	60	1.4	1.5	5.0	150
FR155G		1.5	55	600	-	60	1.4	1.5	5.0	250
FR156G		1.5	55	800	-	60	1.4	1.5	5.0	500
FR157G		1.5	55	1000	-	60	1.4	1.5	5.0	500
FR157G-STR		1.5	55	1000	-	60	1.4	1.5	5.0	250
1N4933G/GRN3 Series, 1 A, Case Type: DO-41/SMA										
1N4933G	**GRN3**	1.0	50	50	5.0	30	1.2	1.0	5.0	150
1N4934G	**GRN4**	1.0	50	100	5.0	30	1.2	1.0	5.0	150
1N4935G	**GRN5**	1.0	50	200	5.0	30	1.2	1.0	5.0	150
1N4936G	**GRN6**	1.0	50	400	5.0	30	1.2	1.0	5.0	150
1N4937G	**GRN7**	1.0	50	600	5.0	30	1.2	1.0	5.0	150

Note :

(1) Reverse Recovery test conditions : I_F = 0.5 A, I_R = 1 A, Irr = 0.25 A

Fast Recovery Glass Passivated Rectifier Diodes

The plastic material carries U/L recognition 94V-0.

Type No.		Max. Average Forward Rectified Current		Max. Repetitive Peak Reverse Voltage	Max. Repetitive Peak Forward Current	Max. Surge Forward Current	Max. Forward Voltage Drop at Ta=25°C		Max. Reverse Current at Ta=25°C	Max. Reverse Recovery Time
		$I_{F(AV)}$ @	Ta	V_{RRM}	I_{FRM}	I_{FSM}	V_F @	I_F	I_R	$Trr^{(1)}$
Axial Lead	SMD	(A)	(°C)	(V)	(A)	(A)	(V)	(A)	(μA)	(ns)
FR201G/GR2A Series, 2 A, Case Type: D2/SMB										
FR201G	**GR2A**	2.0	75	50	10	75	1.3	2.0	10	150
FR202G	**GR2B**	2.0	75	100	10	75	1.3	2.0	10	150
FR203G	**GR2D**	2.0	75	200	10	75	1.3	2.0	10	150
FR204G	**GR2G**	2.0	75	400	10	75	1.3	2.0	10	150
FR205G	**GR2J**	2.0	75	600	10	75	1.3	2.0	10	250
FR206G	**GR2K**	2.0	75	800	10	75	1.3	2.0	10	500
FR207G	**GR2M**	2.0	75	1000	10	75	1.3	2.0	10	500
FR207G-STR	**-**	2.0	75	1000	10	75	1.3	2.0	10	250
FR251G Series, 2.5 A, Case Type: D2A										
FR251G		2.5	75	50	-	80	1.3	2.5	10	150
FR252G		2.5	75	100	-	80	1.3	2.5	10	150
FR253G		2.5	75	200	-	80	1.3	2.5	10	150
FR254G		2.5	75	400	-	80	1.3	2.5	10	150
FR255G		2.5	75	600	-	80	1.3	2.5	10	250
FR256G		2.5	75	800	-	80	1.3	2.5	10	500
FR257G		2.5	75	1000	-	80	1.3	2.5	10	500
FR257G-STR		2.5	75	1000	-	80	1.3	2.5	10	250
FR301G/GR3A Series, 3 A, Case Type: DO-201AD/SMC										
FR301G	**GR3A**	3.0	55	50	15	100	1.3	3.0	5.0	150
FR302G	**GR3B**	3.0	55	100	15	100	1.3	3.0	5.0	150
FR303G	**GR3D**	3.0	55	200	15	100	1.3	3.0	5.0	150
FR304G	**GR3G**	3.0	55	400	15	100	1.3	3.0	5.0	150
FR305G	**GR3J**	3.0	55	600	15	100	1.3	3.0	5.0	250
FR306G	**GR3K**	3.0	55	800	15	100	1.3	3.0	5.0	500
FR307G	**GR3M**	3.0	55	1000	15	100	1.3	3.0	5.0	500
FR307G-STR	**-**	3.0	55	1000	15	100	1.3	3.0	5.0	250
SMC1200D/SMC2000D, 12-20 A, Case Type: SMC										
	SMC1200D	12	50	200	-	390	0.85	5.0	25	200
	SMC2000D	20	55	200	-	390	0.84	5.0	25	200

Note :

(1) Reverse Recovery test conditions : I_F = 0.5 A, I_R = 1 A, Irr = 0.25 A

High Efficient Rectifier Diodes

The plastic material carries U/L recognition 94V-0.

Type No.		Max. Average Forward Rectified Current		Max. Repetitive Peak Reverse Voltage	Max. Repetitive Peak Forward Current	Max. Forward Surge Current	Max. Forward Voltage Drop at Ta=25°C		Max. Reverse Current at Ta=25°C	Max. Reverse Recovery Time
		$I_{F(AV)}$ @ Ta		V_{RRM}	I_{FRM}	I_{FSM}	V_F @ I_F		I_R	Trr (1)
Axial Lead	SMD	(A)	(°C)	(V)	(A)	(A)	(V)	(A)	(μA)	(ns)
1H1G Series, 1 A, Case Type: M1A										
1H1G		1.0	25	50	-	25	1.2	1.0	5.0	50
1H2G		1.0	25	100	-	25	1.2	1.0	5.0	50
1H3G		1.0	25	200	-	25	1.2	1.0	5.0	50
1H4G		1.0	25	300	-	25	1.2	1.0	5.0	50
1H5G		1.0	25	400	-	25	1.2	1.0	5.0	50
1H6G		1.0	25	600	-	25	1.8	1.0	5.0	75
1H7G		1.0	25	800	-	25	1.8	1.0	5.0	75
1H8G		1.0	25	1000	-	25	1.8	1.0	5.0	75
RD2A, 1.2 A, Case Type: D2A										
RD2A		1.2	25	600	-	30	1.55	1.2	50	50
HER101/SE1A Series, 1 A, Case Type: DO-41/SMA										
HER101	**SE1A**	1.0	55	50	5.0	30	1.1	1.0	5.0	50
HER102	**SE1B**	1.0	55	100	5.0	30	1.1	1.0	5.0	50
HER103	**SE1D**	1.0	55	200	5.0	30	1.1	1.0	5.0	50
HER104	**SE1E**	1.0	55	300	5.0	30	1.1	1.0	5.0	50
HER105	**SE1G**	1.0	55	400	5.0	30	1.1	1.0	5.0	50
HER106	**SE1J**	1.0	55	600	5.0	30	1.7	1.0	5.0	75
HER107	**SE1K**	1.0	55	800	5.0	30	1.7	1.0	5.0	75
HER108	**SE1M**	1.0	55	1000	5.0	30	2.2	1.0	5.0	75
HER151/SEOA Series, 1.5 A, Case Type: DO-41/SMA										
HER151	**SEOA**	1.5	55	50	5.0	60	1.1	1.5	5.0	50
HER152	**SEOB**	1.5	55	100	5.0	60	1.1	1.5	5.0	50
HER153	**SEOD**	1.5	55	200	5.0	60	1.1	1.5	5.0	50
HER154	**SEOE**	1.5	55	300	5.0	60	1.1	1.5	5.0	50
HER155	**SEOG**	1.5	55	400	5.0	60	1.1	1.5	5.0	50
HER156	**SEOJ**	1.5	55	600	5.0	60	1.7	1.5	5.0	75
HER157	**SEOK**	1.5	55	800	5.0	60	1.7	1.5	5.0	75
HER158	**SEOM**	1.5	55	1000	5.0	60	1.7	1.5	5.0	75
HER201/SE2A Series, 2 A, Case Type: D2/SMB										
HER201	**SE2A**	2.0	55	50	10	75	1.1	2.0	10	50
HER202	**SE2B**	2.0	55	100	10	75	1.1	2.0	10	50
HER203	**SE2D**	2.0	55	200	10	75	1.1	2.0	10	50
HER204	**SE2E**	2.0	55	300	10	75	1.1	2.0	10	50
HER205	**SE2G**	2.0	55	400	10	75	1.1	2.0	10	50
HER206	**SE2J**	2.0	55	600	10	75	1.7	2.0	10	75
HER207	**SE2K**	2.0	55	800	10	75	1.7	2.0	10	75
HER208	**SE2M**	2.0	55	1000	10	75	1.7	2.0	10	75

Note : (1) Reverse Recovery test conditions : I_F = 0.5 A, I_R = 1 A, Irr = 0.25 A

High Efficient Rectifier Diodes

The plastic material carries U/L recognition 94V-0.

Type No.		Max. Average Forward Rectified Current		Max. Repetitive Peak Reverse Voltage	Max. Repetitive Peak Forward Current	Max. Forward Surge Current	Max. Forward Voltage Drop at Ta=25°C		Max. Reverse Current at Ta=25°C	Max. Reverse Recovery Time
		$I_{F(AV)}$ @ Ta		V_{RRM}	I_{FRM}	I_{FSM}	V_F @ I_F		I_R	Trr [1]
Axial Lead	SMD	(A)	(°C)	(V)	(A)	(A)	(V)	(A)	(μA)	(ns)

HER251/SETA Series, 2.5 A, Case Type: D2A/SMB





HER251	**SETA**	2.5	55	50	10	100	1.1	2.5	10	50
HER252	**SETB**	2.5	55	100	10	100	1.1	2.5	10	50
HER253	**SETD**	2.5	55	200	10	100	1.1	2.5	10	50
HER254	**SETE**	2.5	55	300	10	100	1.1	2.5	10	50
HER255	**SETG**	2.5	55	400	10	100	1.1	2.5	10	50
HER256	**SETJ**	2.5	55	600	10	100	1.7	2.5	10	75
HER257	**SETK**	2.5	55	800	10	100	1.7	2.5	10	75
HER258	**SETM**	2.5	55	1000	10	100	1.7	2.5	10	75

HER301/SE3A Series, 3 A, Case Type: DO-201AD/SMC





HER301	**SE3A**	3.0	55	50	15	150	1.1	3.0	10	50
HER302	**SE3B**	3.0	55	100	15	150	1.1	3.0	10	50
HER303	**SE3D**	3.0	55	200	15	150	1.1	3.0	10	50
HER304	**SE3E**	3.0	55	300	15	150	1.1	3.0	10	50
HER305	**SE3G**	3.0	55	400	15	150	1.1	3.0	10	50
HER306	**SE3J**	3.0	55	600	15	150	1.7	3.0	10	75
HER307	**SE3K**	3.0	55	800	15	150	1.7	3.0	10	75
HER308	**SE3M**	3.0	55	1000	15	150	1.7	3.0	10	75

HER501/SE5A Series, 5 A, Case Type: DO-201AD/SMC





HER501	**SE5A**	5.0	55	50	25	200	1.1	5.0	10	50
HER502	**SE5B**	5.0	55	100	25	200	1.1	5.0	10	50
HER503	**SE5D**	5.0	55	200	25	200	1.1	5.0	10	50
HER504	**SE5E**	5.0	55	300	25	200	1.1	5.0	10	50
HER505	**SE5G**	5.0	55	400	25	200	1.1	5.0	10	50
HER506	**SE5J**	5.0	55	600	25	200	1.7	5.0	10	75
HER507	**SE5K**	5.0	55	800	25	200	1.7	5.0	10	75
HER508	**SE5M**	5.0	55	1000	25	200	1.7	5.0	10	75

HER601 Series, 6 A, Case Type: D6



HER601		6.0	55	50	25	200	1.1	6.0	10	50
HER602		6.0	55	100	25	200	1.1	6.0	10	50
HER603		6.0	55	200	25	200	1.1	6.0	10	50
HER604		6.0	55	300	25	200	1.1	6.0	10	50
HER605		6.0	55	400	25	200	1.1	6.0	10	50
HER606		6.0	55	600	25	200	1.7	6.0	10	75
HER607		6.0	55	800	25	200	1.7	6.0	10	75
HER608		6.0	55	1000	25	200	1.7	6.0	10	75

Note : (1) Reverse Recovery test conditions : I_F = 0.5 A, I_R = 1 A, Irr = 0.25 A

Super Fast Rectifier Diodes

The plastic material carries U/L recognition 94V-0.

Type No.		Max. Average Forward Rectified Current		Max. Repetitive Peak Reverse Voltage	Max. Repetitive Peak Forward Current	Max. Forward Surge Current	Max. Forward Voltage Drop at Ta=25°C		Max. Reverse Current at Ta=25°C	Max. Reverse Recovery Time
		$I_{F(AV)}$ @ Ta		V_{RRM}	I_{FRM}	I_{FSM}	V_F @ I_F		I_R	Trr
Axial Lead	SMD	(A)	(°C)	(V)	(A)	(A)	(V)	(A)	(μA)	(ns)
AG01 Series, 0.5-1 A, Case Type: DO-41										
AG01Y		1.0	25	70	-	25	1.2	1.0	100	100(2)
AG01Z		0.7	25	200	-	15	1.8	0.7	100	100(2)
AG01		0.7	25	400	-	15	1.8	0.7	100	100(2)
AG01A		0.5	25	600	-	15	1.8	0.5	100	100(2)
EG01 Series, 0.5 - 1 A, Case Type: DO-41										
EG01Y		1.0	50	70	-	30	1.2	1.0	100	100(2)
EG01Z		0.7	50	200	-	15	1.9	0.7	50	100(2)
EG01		0.7	50	400	-	15	2.0	0.7	50	100(2)
EG01A		0.5	25	600	-	10	2.0	0.5	100	100(2)
EG01C		0.5	25	1000	-	10	3.3	0.5	50	100(2)
EG1 Series, 0.6 - 1 A, Case Type: DO-41										
EG1Y		1.1	50	70	-	30	1.2	1.1	100	100(2)
EG1Z		0.8	50	200	-	15	1.7	0.8	50	100(2)
EG1		0.8	50	400	-	15	1.8	0.8	50	100(2)
EG1A		0.6	25	600	-	10	2.0	0.6	100	100(2)
ERA32-01 Series, 1 A, Case Type: DO-41										
ERA32-01		1.0	40	100	-	40	0.92	1.0	10	100(2)
ERA32-02		1.0	40	200	-	40	0.92	1.0	10	100(2)
11DF1 Series, 1 A, Case Type: DO-41										
11DF1		1.0	63	100	-	30	0.98	1.0	10	35(1)
11DF2		1.0	63	200	-	30	0.98	1.0	10	35(1)
11DF3		1.0	57	300	-	30	1.25	1.0	10	35(1)
11DF4		1.0	57	400	-	30	1.25	1.0	10	35(1)
MUR120 Series, 1 A, Case Type: DO-41										
MUR120		1.0	25	200	-	35	0.875	1.0	2.0	25(1)
MUR140		1.0	25	400	-	35	1.25	1.0	5.0	50(1)
MUR160		1.0	25	600	-	35	1.25	1.0	5.0	50(1)
RG10 Series, 1 - 1.5 A, Case Type: D2										
RG10Y		1.5	55	70	5.0	50	1.1	1.5	500	35(1)
RG10		1.2	55	400	5.0	50	1.8	1.5	500	35(1)
RG10A		1.0	55	600	5.0	50	2.0	1.0	500	35(1)

Notes: (1) Reverse Recovery test conditions : I_F = 0.5 A, I_R = 1 A, Irr = 0.25 A

(2) Reverse Recovery test conditions : I_F = 100 mA, I_R = 100 mA

Super Fast Rectifier Diodes

The plastic material carries U/L recognition 94V-0.

Type No.		Max. Average Forward Rectified Current		Max. Repetitive Peak Reverse Voltage	Max. Repetitive Peak Forward Current	Max. Forward Surge Current	Max. Forward Voltage Drop at Ta=25°C		Max. Reverse Current at Ta=25°C	Max. Reverse Recovery Time
		$I_{F(AV)}$ @	Ta	V_{RRM}	I_{FRM}	I_{FSM}	V_F @	I_F	I_R	Trr
Axial Lead	SMD	(A)	(°C)	(V)	(A)	(A)	(V)	(A)	(μA)	(ns)
UF1001 Series, 1 A, Case Type: DO-41										
UF1001		1.0	55	50	-	30	1.10	1.0	5.0	50(1)
UF1002		1.0	55	100	-	30	1.10	1.0	5.0	50(1)
UF1003		1.0	55	200	-	30	1.10	1.0	5.0	50(1)
UF1004		1.0	55	400	-	30	1.10	1.0	5.0	50(1)
UF1005		1.1	55	600	-	30	1.70	1.0	5.0	75(1)
UF1006		1.0	55	800	-	30	1.70	1.0	5.0	75(1)
UF1007		1.0	55	1000	-	30	1.70	1.0	5.0	75(1)
UF4001 Series, 1 A, Case Type: DO-41										
UF4001		1.0	55	50	-	30	1.00	1.0	10	50(1)
UF4002		1.0	55	100	-	30	1.00	1.0	10	50(1)
UF4003		1.0	55	200	-	30	1.00	1.0	10	50(1)
UF4004		1.0	55	400	-	30	1.00	1.0	10	50(1)
UF4005		1.0	55	600	-	30	1.70	1.0	10	75(1)
UF4006		1.0	55	800	-	30	1.70	1.0	10	75(1)
UF4007		1.0	55	1000	-	30	1.70	1.0	10	75(1)
SF11/SS1A Series, 1 A, Case Type: DO-41/SMA										
SF11	**SS1A**	1.0	55	50	5.0	30	0.95	1.0	5.0	35(1)
SF12	**SS1B**	1.0	55	100	5.0	30	0.95	1.0	5.0	35(1)
SF13	**SS1C**	1.0	55	150	5.0	30	0.95	1.0	5.0	35(1)
SF14	**SS1D**	1.0	55	200	5.0	30	0.95	1.0	5.0	35(1)
SF15	**SS1E**	1.0	55	300	5.0	30	1.70	1.0	5.0	35(1)
SF16	**SS1G**	1.0	55	400	5.0	30	1.70	1.0	5.0	35(1)
SF17	**SS1J**	1.0	55	600	5.0	30	1.70	1.0	5.0	35(1)
SF18	**SS1K**	1.0	55	800	5.0	30	4.00	1.0	10	35(1)
SF19	**SS1M**	1.0	55	1000	5.0	30	4.00	1.0	10	35(1)
ES1A Series, 1 A, Case Type: SMA										
	ES1A	1.0	120(T_L)	50	-	30	0.95	1.0	5.0	35(1)
	ES1B	1.0	120(T_L)	100	-	30	0.95	1.0	5.0	35(1)
	ES1C	1.0	120(T_L)	150	-	30	0.95	1.0	5.0	35(1)
	ES1D	1.0	120(T_L)	200	-	30	0.95	1.0	5.0	35(1)
	ES1E	1.0	120(T_L)	300	-	30	1.25	1.0	5.0	35(1)
	ES1G	1.0	120(T_L)	400	-	30	1.25	1.0	5.0	35(1)
	ES1J	1.0	120(T_L)	600	-	30	1.70	1.0	5.0	35(1)
	ES1K	1.0	55	800	-	30	4.00	1.0	10	35(1)
	ES1M	1.0	55	1000	-	30	4.00	1.0	10	35(1)

Notes: (1) Reverse Recovery test conditions : I_F = 0.5 A, I_R = 1 A, Irr = 0.25 A

(2) Reverse Recovery test conditions : I_F = 100 mA, I_R = 100 mA

Super Fast Rectifier Diodes

The plastic material carries U/L recognition 94V-0.

Type No.		Max. Average Forward Rectified Current		Max. Repetitive Peak Reverse Voltage	Max. Repetitive Peak Forward Current	Max. Forward Surge Current	Max. Forward Voltage Drop at Ta=25°C		Max. Reverse Current at Ta=25°C	Max. Reverse Recovery Time	
		$I_{F(AV)}$ @ Ta		V_{RRM}	I_{FRM}	I_{FSM}	V_F @ I_F		I_R	Trr	
Axial Lead	SMD	(A)	(°C)	(V)	(A)	(A)	(V)	(A)	(μA)	(ns)	
RG2 Series, 1 - 1.5 A, Case Type: D2											
RG2Y		1.5	60	70	5.0	50	1.1	1.5	500	35(1)	100(2)
RG2Z		1.2	60	200	5.0	50	1.5	1.5	500	35(1)	100(2)
RG2		1.2	60	400	5.0	50	1.8	1.5	500	35(1)	100(2)
RG2A		1.0	60	600	5.0	50	2.0	1.0	500	35(1)	100(2)
RG4 Series, 1 - 2.0 A, Case Type: DO-201AD											
RG4Y		2.0	60	70	-	100	1.3	3.5	1000	35(1)	100(2)
RG4Z		1.0	60	200	-	80	1.7	3.0	1000	35(1)	100(2)
RG4		1.0	60	400	-	80	1.8	3.0	500	35(1)	100(2)
RG4A		1.0	60	600	-	50	2.0	2.0	500	35(1)	100(2)
EL1 Series, 1.5 A, Case Type: DO-41											
EL1Z		1.5	25	200	-	20	0.98	1.5	100	50(2)	
EL1		1.5	25	400	-	20	1.30	1.5	10	100(2)	
SFO1/SSOA Series, 1.5 A, Case Type: DO-41/SMA											
SFO1	**SSOA**	1.5	55	50	5.0	60	0.95	1.5	5.0	35(1)	
SFO2	**SSOB**	1.5	55	100	5.0	60	0.95	1.5	5.0	35(1)	
SFO3	**SSOC**	1.5	55	150	5.0	60	0.95	1.5	5.0	35(1)	
SFO4	**SSOD**	1.5	55	200	5.0	60	0.95	1.5	5.0	35(1)	
SFO5	**SSOE**	1.5	55	300	5.0	60	1.70	1.5	5.0	35(1)	
SFO6	**SSOG**	1.5	55	400	5.0	60	1.70	1.5	5.0	35(1)	
SFO7	**SSOJ**	1.5	55	600	5.0	60	1.70	1.5	5.0	35(1)	
SFO8	**SSOK**	1.5	55	800	5.0	60	4.00	1.5	20	35(1)	
SFO9	**SSOM**	1.5	55	1000	5.0	60	4.00	1.5	20	35(1)	
EPG20A Series, 2 A, Case Type: D2											
EGP20A		2.0	55	50	-	75	0.95	2.0	5.0	50(1)	
EGP20B		2.0	55	100	-	75	0.95	2.0	5.0	50(1)	
EGP20C		2.0	55	150	-	75	0.95	2.0	5.0	50(1)	
EGP20D		2.0	55	200	-	75	0.95	2.0	5.0	50(1)	
UG2A-D Series, 2 A, Case Type: DO-41											
UG2A		2.0	50	50	-	80	0.95	2.0	5.0	15(1)	
UG2B		2.0	50	100	-	80	0.95	2.0	5.0	15(1)	
UG2C		2.0	50	150	-	80	0.95	2.0	5.0	15(1)	
UG2D		2.0	50	200	-	80	0.95	2.0	5.0	15(1)	

Notes: (1) Reverse Recovery test conditions : I_F = 0.5 A, I_R = 1 A, Irr = 0.25 A

(2) Reverse Recovery test conditions : I_F = 100 mA, I_R = 100 mA

Super Fast Rectifier Diodes

The plastic material carries U/L recognition 94V-0.

Type No.		Max. Average Forward Rectified Current		Max. Repetitive Peak Reverse Voltage	Max. Repetitive Peak Forward Current	Max. Forward Surge Current	Max. Forward Voltage Drop at Ta=25°C		Max. Reverse Current at Ta=25°C	Max. Reverse Recovery Time
		$I_{F(AV)}$ @	Ta	V_{RRM}	I_{FRM}	I_{FSM}	V_F @	I_F	I_R	Trr
Axial Lead	SMD	(A)	(°C)	(V)	(A)	(A)	(V)	(A)	(μA)	(ns)
SF21/SS2A Series, 2 A, Case Type: D2/SMB										
SF21	**SS2A**	2.0	55	50	10	75	0.95	2.0	5.0	35(1)
SF22	**SS2B**	2.0	55	100	10	75	0.95	2.0	5.0	35(1)
SF23	**SS2C**	2.0	55	150	10	75	0.95	2.0	5.0	35(1)
SF24	**SS2D**	2.0	55	200	10	75	0.95	2.0	5.0	35(1)
SF25	**SS2E**	2.0	55	300	10	75	1.70	2.0	5.0	35(1)
SF26	**SS2G**	2.0	55	400	10	75	1.70	2.0	5.0	35(1)
SF27	**SS2J**	2.0	55	600	10	75	1.70	2.0	5.0	35(1)
SF28	**SS2K**	2.0	55	800	10	75	4.00	2.0	20	35(1)
SF29	**SS2M**	2.0	55	1000	10	75	4.00	2.0	20	35(1)
ES2A Series, 2 A, Case Type: SMB										
	ES2A	2.0	110(T_L)	50	-	50	0.90	2.0	5.0	20(1)
	ES2B	2.0	110(T_L)	100	-	50	0.90	2.0	5.0	20(1)
	ES2C	2.0	110(T_L)	150	-	50	0.90	2.0	5.0	20(1)
	ES2D	2.0	110(T_L)	200	-	50	0.90	2.0	5.0	20(1)
SFT1/SSTA Series, 2.5 A, Case Type: D2A/SMB										
SFT1	**SSTA**	2.5	55	50	10	100	0.95	2.5	5.0	35(1)
SFT2	**SSTB**	2.5	55	100	10	100	0.95	2.5	5.0	35(1)
SFT3	**SSTC**	2.5	55	150	10	100	0.95	2.5	5.0	35(1)
SFT4	**SSTD**	2.5	55	200	10	100	0.95	2.5	5.0	35(1)
SFT5	**SSTE**	2.5	55	300	10	100	1.70	2.5	5.0	35(1)
SFT6	**SSTG**	2.5	55	400	10	100	1.70	2.5	5.0	35(1)
SFT7	**SSTJ**	2.5	55	600	10	100	1.70	2.5	5.0	35(1)
SFT8	**SSTK**	2.5	55	800	10	100	4.00	2.5	5.0	35(1)
SFT9	**SSTM**	2.5	55	1000	10	100	4.00	2.5	5.0	35(1)
1N5807/1N5807US Series, 3.0 A, Case Type: D2A/SMB										
1N5807	**1N5807US**	3.0	55	50	-	125	0.875	4	5	30(2)
1N5809	**1N5809US**	3.0	55	100	-	125	0.875	4	5	30(2)
1N5811	**1N5811US**	3.0	55	150	-	125	0.875	4	5	30(2)
UF5404 Series, 3 A, Case Type: DO-201AD										
UF5404		3.0	55	300	-	150	1.00	3.0	10	50(1)
UF5405		3.0	55	400	-	150	1.00	3.0	10	50(1)
UF5406		3.0	55	600	-	150	1.70	3.0	10	75(1)
UF5407		3.0	55	800	-	150	1.70	3.0	10	75(1)
UF5408		3.0	55	1000	-	150	1.70	3.0	10	75(1)

Notes: (1) Reverse Recovery test conditions : I_F = 0.5 A, I_R = 1 A, Irr = 0.25 A

(2) Reverse Recovery test conditions : I_F = 100 mA, I_R = 100 mA

* For SMA package add suffix "A" e.g. ES2AA, ES2BA…

Super Fast Rectifier Diodes

The plastic material carries U/L recognition 94V-0.

Type No.		Max. Average Forward Rectified Current		Max. Repetitive Peak Reverse Voltage	Max. Repetitive Peak Forward Current	Max. Forward Surge Current	Max. Forward Voltage Drop at Ta=25°C		Max. Reverse Current at Ta=25°C	Max. Reverse Recovery Time
		$I_{F(AV)}$ @	Ta	V_{RRM}	I_{FRM}	I_{FSM}	V_F @	I_F	I_R	Trr
Axial Lead	SMD	(A)	(°C)	(V)	(A)	(A)	(V)	(A)	(μA)	(ns)
ES3A-M Series, 3 A, Case Type: SMC										
	ES3A	3.0	55	50	-	100	0.95	3.0	10	35(1)
	ES3B	3.0	55	100	-	100	0.95	3.0	10	35(1)
	ES3C	3.0	55	150	-	100	0.95	3.0	10	35(1)
	ES3D	3.0	55	200	-	100	0.95	3.0	10	35(1)
	ES3E	3.0	55	300	-	100	1.30	3.0	10	35(1)
	ES3G	3.0	55	400	-	100	1.30	3.0	10	35(1)
	ES3J	3.0	55	600	-	100	1.70	3.0	10	35(1)
	ES3K	3.0	55	800	-	100	1.70	3.0	10	35(1)
	ES3M	3.0	55	1000	-	100	1.70	3.0	10	35(1)
SF31/SS3A Series, 3 A, Case Type: DO-201AD/SMC										
SF31	**SS3A**	3.0	55	50	15	125	0.95	3.0	10	35(1)
SF32	**SS3B**	3.0	55	100	15	125	0.95	3.0	10	35(1)
SF33	**SS3C**	3.0	55	150	15	125	0.95	3.0	10	35(1)
SF34	**SS3D**	3.0	55	200	15	125	0.95	3.0	10	35(1)
SF35	**SS3E**	3.0	55	300	15	125	1.70	3.0	10	35(1)
SF36	**SS3G**	3.0	55	400	15	125	1.70	3.0	10	35(1)
SF37	**SS3J**	3.0	55	600	15	125	1.70	3.0	10	35(1)
SF38	**SS3K**	3.0	55	800	15	125	4.00	3.0	10	35(1)
SF39	**SS3M**	3.0	55	1000	15	125	4.00	3.0	10	35(1)
SF51/SS5A Series, 5 A, Case Type: DO-201AD/SMC										
SF51	**SS5A**	5.0	55	50	20	135	0.95	5.0	10	35(1)
SF52	**SS5B**	5.0	55	100	20	135	0.95	5.0	10	35(1)
SF53	**SS5C**	5.0	55	150	20	135	0.95	5.0	10	35(1)
SF54	**SS5D**	5.0	55	200	20	135	0.95	5.0	10	35(1)
SF55	**SS5E**	5.0	55	300	20	135	1.70	5.0	10	35(1)
SF56	**SS5G**	5.0	55	400	20	135	1.70	5.0	10	35(1)
SF57	**SS5J**	5.0	55	600	20	135	1.70	5.0	10	35(1)
SF58	**SS5K**	5.0	55	800	20	135	4.00	5.0	10	35(1)
SF59	**SS5M**	5.0	55	1000	20	135	4.00	5.0	10	35(1)
SF61 Series, 6 A, Case Type: D6										
SF61		6.0	55	50	25	150	0.95	6.0	5.0	35(1)
SF62		6.0	55	100	25	150	0.95	6.0	5.0	35(1)
SF63		6.0	55	150	25	150	0.95	6.0	5.0	35(1)
SF64		6.0	55	200	25	150	0.95	6.0	5.0	35(1)
SF65		6.0	55	300	25	150	1.70	6.0	5.0	35(1)
SF66		6.0	55	400	25	150	1.70	6.0	5.0	35(1)
SF67		6.0	55	600	25	150	1.70	6.0	5.0	35(1)
SF68		6.0	55	800	25	150	4.00	6.0	5.0	35(1)
SF69		6.0	55	1000	25	150	4.00	6.0	5.0	35(1)

Note: (1) Reverse Recovery test conditions : I_F = 0.5 A, I_R = 1 A, Irr = 0.25 A

Super Fast Rectifier Diodes

The plastic material carries U/L recognition 94V-0.

Type No.	Max. Average Forward Rectified Current		Max. Repetitive Peak Reverse Voltage	Max. Repetitive Peak Forward Current	Max. Forward Surge Current	Max. Forward Voltage Drop at Ta=25°C		Max. Reverse Current at Ta=25°C	Max. Reverse Recovery Time
	$I_{F(AV)}$ @	Ta	V_{RRM}	I_{FRM}	I_{FSM}	V_F @	I_F	I_R	Trr [1]
Axial Lead	(A)	(°C)	(V)	(A)	(A)	(V)	(A)	(μA)	(ns)
FES8AT Series, 8 A, Case Type: TO-220AC									
FES8AT[2]	8.0	100(Tc)	50	-	125	0.95	8.0	10	35[1]
FES8BT[2]	8.0	100(Tc)	100	-	125	0.95	8.0	10	35[1]
FES8CT[2]	8.0	100(Tc)	150	-	125	0.95	8.0	10	35[1]
FES8DT[2]	8.0	100(Tc)	200	-	125	0.95	8.0	10	35[1]
FES8FT[2]	8.0	100(Tc)	300	-	125	1.30	8.0	10	50[1]
FES8GT[2]	8.0	100(Tc)	400	-	125	1.30	8.0	10	50[1]
FES8HT[2]	8.0	100(Tc)	500	-	125	1.50	8.0	10	50[1]
FES8JT[2]	8.0	100(Tc)	600	-	125	1.50	8.0	10	50[1]
FES16AT Series, 16 A, Case Type: TO-220AC									
FES16AT[2]	16	100(Tc)	50	-	250	0.95	16	10	35[1]
FES16BT[2]	16	100(Tc)	100	-	250	0.95	16	10	35[1]
FES16CT[2]	16	100(Tc)	150	-	250	0.95	16	10	35[1]
FES16DT[2]	16	100(Tc)	200	-	250	0.95	16	10	35[1]
FES16FT[2]	16	100(Tc)	300	-	250	1.30	16	10	50[1]
FES16GT[2]	16	100(Tc)	400	-	250	1.30	16	10	50[1]
FES16HT[2]	16	100(Tc)	500	-	250	1.50	16	10	50[1]
FES16JT[2]	16	100(Tc)	600	-	250	1.50	16	10	50[1]
FEP16AT Series, 16 A, Case Type: TO-220AB									
FEP16AT	16	100(Tc)	50	-	125	0.95	16	10	35
FEP16BT	16	100(Tc)	100	-	125	0.95	16	10	35
FEP16CT	16	100(Tc)	150	-	125	0.95	16	10	35
FEP16DT	16	100(Tc)	200	-	125	0.95	16	10	35
FEP16FT	16	100(Tc)	300	-	125	1.30	16	10	50
FEP16GT	16	100(Tc)	400	-	125	1.30	16	10	50
FEP16HT	16	100(Tc)	500	-	125	1.50	16	10	50
FEP16JT	16	100(Tc)	600	-	125	1.50	16	10	50
FEP30AP Series, 30 A, Case Type: TO-247AD									
FEP30AP	30	100(Tc)	50	-	300	0.95	30	10	35
FEP30BP	30	100(Tc)	100	-	300	0.95	30	10	35
FEP30CP	30	100(Tc)	150	-	300	0.95	30	10	35
FEP30DP	30	100(Tc)	200	-	300	0.95	30	10	35
FEP30FP	30	100(Tc)	300	-	300	1.30	30	10	50
FEP30GP	30	100(Tc)	400	-	300	1.30	30	10	50
FEP30HP	30	100(Tc)	500	-	300	1.50	30	10	50
FEP30JP	30	100(Tc)	600	-	300	1.50	30	10	50
MUR1520/S, Case Type: TO-220AC									
MUR1520	15	150 Tc	200	-	200	1.05	15	10	35
MUR1520S	15	150 Tc	200	-	200	1.05	15	10	35

Notes :

(1) Reverse Recovery test conditions : I_F = 0.5 A, I_R = 1 A, Irr = 0.25 A

(2) For wire leads (case type ITO-220AC) add suffix "F" e.g. FESF8AT,FESF8BT,…FESF8JT and FESF16AT,FESF16BT,…FESF16JT

Super Fast Glass Passivated Rectifier Diodes

The plastic material carries U/L recognition 94V-0.

Type No.		Max. Average Forward Rectified Current		Max. Repetitive Peak Reverse Voltage	Max. Repetitive Peak Forward Current	Max. Surge Forward Current	Max. Forward Voltage Drop at Ta=25°C		Max. Reverse Current at Ta=25°C	Max. Reverse Recovery Time
		$I_{F(AV)}$ @	Ta	V_{RRM}	I_{FRM}	I_{FSM}	V_F @	I_F	I_R	$Trr^{(1)}$
Axial Lead	SMD	(A)	(°C)	(V)	(A)	(A)	(V)	(A)	(μA)	(ns)
LMS1A Series, 1 A, Case Type: M1A										
LMS1A		1.0	50	50	-	30	0.95	1.0	5.0	35
LMS1B		1.0	50	100	-	30	0.95	1.0	5.0	35
LMS1D		1.0	50	200	-	30	0.95	1.0	5.0	35
LMS1G		1.0	50	400	-	30	1.7	1.0	5.0	35
LMS1J		1.0	50	600	-	30	1.7	1.0	5.0	35
LMS1K		1.0	50	800	-	30	4.0	1.0	10	35
LMS1M		1.0	50	1000	-	30	4.0	1.0	10	35
SF11G Series, 1 A, Case Type: DO-41										
SF11G		1.0	55	50	-	30	0.95	1.0	5.0	35
SF12G		1.0	55	100	-	30	0.95	1.0	5.0	35
SF13G		1.0	55	150	-	30	0.95	1.0	5.0	35
SF14G		1.0	55	200	-	30	0.95	1.0	5.0	35
SF15G		1.0	55	300	-	30	1.7	1.0	5.0	35
SF16G		1.0	55	400	-	30	1.7	1.0	5.0	35
SF17G		1.0	55	600	-	30	1.7	1.0	5.0	35
SF18G		1.0	55	800	-	30	4.0	1.0	10	35
SF19G		1.0	55	1000	-	30	4.0	1.0	10	35
S2L20U, 1.5 A, Case Type: D2A										
S2L20U		1.5	25	200	-	50	0.98	1.5	10	35
1N5802/1N5802US Series, 2.5 A, Case Type: DO-41										
1N5802	**1N5802US**	2.5	75 (T_L)	50	-	35	0.875	1.0	1.0	25
1N5803	**1N5803US**	2.5	75 (T_L)	75	-	35	0.875	1.0	1.0	25
1N5804	**1N5804US**	2.5	75 (T_L)	100	-	35	0.875	1.0	1.0	25
1N5805	**1N5805US**	2.5	75 (T_L)	125	-	35	0.875	1.0	1.0	25
1N5806	**1N5806US**	2.5	75 (T_L)	150	-	35	0.875	1.0	1.0	25
RHRP660F, 6 A, Case Type: ITO-220AC										
RHRP660F		6.0	100(T_C)	600	-	80	2.7	6.0	10	20
SF61G Series, 6 A, Case Type: D6										
SF61G		6.0	55	50	-	150	0.95	6.0	5.0	35
SF62G		6.0	55	100	-	150	0.95	6.0	5.0	35
SF63G		6.0	55	150	-	150	0.95	6.0	5.0	35
SF64G		6.0	55	200	-	150	0.95	6.0	5.0	35
SF65G		6.0	55	300	-	150	1.7	6.0	5.0	35
SF66G		6.0	55	400	-	150	1.7	6.0	5.0	35
SF67G		6.0	55	600	-	150	1.7	6.0	5.0	35
SF68G		6.0	55	800	-	150	4.0	6.0	10	35
SF69G		6.0	55	1000	-	150	4.0	6.0	10	35
SMC1520, 15 A, Case Type: SMC										
	SMC1520	15	75(T_C)	200	-	200	1.05	15.0	10	35
MUR3020WT Series, Case Type: TO-247AD (TO-3P)										
MUR3020WT		30 A	150 Tc	200	-	200	1.05	15	10	$30^{(2)}$
MUR3040WT		30 A	150 Tc	400	-	150	1.25	15	10	$60^{(2)}$

Notes : (1) Reverse Recovery test conditions : I_F = 0.5 A, I_R = 1 A, Irr = 0.25 A

(2) Reverse Recovery test conditions : I_F = 1A, di/dt = 50 A/ms

Schottky Barrier Rectifiers

The plastic material carries U/L recognition 94V-0.

Type No.		Max. Average Forward Rectified Current		Max. Repetitive Peak Reverse Voltage	Max. Repetitive Peak Forward Current	Max. Forward Surge Current	Max. Forward Voltage Drop at Ta=25°C		Max. Reverse Current at Ta=25°C
		$I_{F(AV)}$ @	T_L	V_{RRM}	I_{FRM}	I_{FSM}	V_F @	I_F	I_R
Axial Lead	SMD	(A)	(°C)	(V)	(A)	(A)	(V)	(A)	(mA)
AK03 Series, 0.7 - 1 A, Case Type: DO-41									
AK03		1.0	25	30	-	25	0.55	1.0	1.0
AK04		1.0	25	40	-	25	0.55	1.0	1.0
AK06		0.7	40	60	-	10	0.62	0.7	1.0
AK09		0.7	35	90	-	10	0.81	0.7	1.0
1N5817/SKN7 Series, 1 A, Case Type: DO-41/SMA									
1N5817	**SKN7**	1.0	90	20	5.0	25	0.45	1.0	1.0
1N5818	**SKN8**	1.0	90	30	5.0	25	0.55	1.0	1.0
1N5819	**SKN9**	1.0	90	40	5.0	25	0.60	1.0	1.0
LL5817 Series, 1 A, Case Type: MELF(Plastic)									
	LL5817	1.0	90	20	5.0	25	0.45	1.0	1.0
	LL5818	1.0	90	30	5.0	25	0.55	1.0	1.0
	LL5819	1.0	90	40	5.0	25	0.60	1.0	1.0
1S20 - 1SB0 Series, 1.0 A, Case Type: M1A									
1S20		1.0	75	20	-	35	0.55	1.0	1.0
1S30		1.0	75	30	-	35	0.55	1.0	1.0
1S40		1.0	75	40	-	35	0.55	1.0	1.0
1S50		1.0	100	50	-	35	0.70	1.0	1.0
1S60		1.0	100	60	-	35	0.70	1.0	1.0
1S80		1.0	100	80	-	35	0.85	1.0	1.0
1SB0		1.0	100	100	-	35	0.85	1.0	1.0
ERA Series, 1 A, Case Type: DO-41									
ERA81-004		1.0	25	40	-	50	0.55	1.0	2.0
ERA83-004		1.0	115	40	-	50	0.55	1.0	2.0
ERA83-006		1.0	111	60	-	30	0.58	1.0	2.0
ERA84-009		1.0	25	90	-	60	0.90	1.0	1.0
SB120/SK12 Series, 1 A, Case Type: DO-41/SMA									
SB120	**SK12**	1.0	75	20	5.0	40	0.50	1.0	0.5
SB130	**SK13**	1.0	75	30	5.0	40	0.50	1.0	0.5
SB140	**SK14**	1.0	75	40	5.0	40	0.50	1.0	0.5
SB150	**SK15**	1.0	100	50	5.0	40	0.70	1.0	0.5
SB160	**SK16**	1.0	100	60	5.0	40	0.70	1.0	0.5
SB170	**SK17**	1.0	100	70	5.0	40	0.70	1.0	0.5
SB180	**SK18**	1.0	100	80	5.0	40	0.79	1.0	0.5
SB190	**SK19**	1.0	100	90	5.0	40	0.79	1.0	0.5
SB1B0	**SK1B**	1.0	100	100	5.0	40	0.79	1.0	0.5

Schottky Barrier Rectifiers

The plastic material carries U/L recognition 94V-0.

Type No.		Max. Average Forward Rectified Current		Max. Repetitive Peak Reverse Voltage	Max. Repetitive Peak Forward Current	Max. Forward Surge Current	Max. Forward Voltage Drop at Ta=25°C		Max. Reverse Current at Ta=25°C
		$I_{F(AV)}$ @	T_L	V_{RRM}	I_{FRM}	I_{FSM}	V_F @	I_F	I_R
Axial Lead	SMD	(A)	(°C)	(V)	(A)	(A)	(V)	(A)	(mA)
MBR150 Series, 1 A, Case Type: DO-41									
MBR150		1.0	55 (Ta)	50	-	25	0.75	1.0	0.5
MBR160		1.0	55 (Ta)	60	-	25	0.75	1.0	0.5
EK Series, 1 - 1.5 A, Case Type: DO-41									
EK03		1.0	25	30	-	25	0.55	1.0	1.0
EK04		1.0	25	40	-	25	0.55	1.0	1.0
EK13		1.5	40	30	-	40	0.55	2.0	5.0
EK14		1.5	40	40	-	40	0.55	2.0	5.0
EK16		1.5	40	60	-	25	0.62	1.5	1.0
EK19		1.5	35	90	-	40	0.81	1.5	2.0
11DQ03 Series, 1.1 A, Case Type: DO-41									
11DQ03		1.1	75 (Tc)	30	-	42	0.55	1.1	6.0
11DQ04		1.1	75 (Tc)	40	-	42	0.55	1.1	6.0
11DQ05		1.1	84 (Tc)	50	-	26	0.58	1.1	11
11DQ06		1.1	84 (Tc)	60	-	26	0.58	1.1	11
11DQ09		1.1	75 (Tc)	90	-	42	0.85	1.1	0.5
11DQ10		1.1	75 (Tc)	100	-	42	0.85	1.1	1.0
10MQ Series, 1.5 A, Case Type: SMA									
	10MQ040N	1.5	123	40	-	30	0.62	1.5	0.5
	10MQ100N	1.5	126	100	-	30	0.85	1.5	0.1
SL12 Series, 1.5 A, Case Type: SMA									
	SL12	1.5	105	20	-	50	0.445	1.0	0.2
	SL13	1.5	105	30	-	50	0.445	1.0	0.2
RK13 Series, 1.5 - 1.7 A, Case Type: D2									
RK13		1.7	75	30	15	50	0.55	1.7	5.1
RK14		1.7	75	40	15	50	0.55	1.7	5.1
RK16		1.5	75	60	15	50	0.62	1.5	1.0
RK19		1.5	75	90	15	50	0.81	1.5	2.0
21DQ09 Series, 1.7 A, Case Type: DO-41									
21DQ09		1.7	47	90	-	70	0.85	2.0	1.0
21DQ10		1.7	43	100	-	70	0.85	2.0	1.0

Schottky Barrier Rectifiers

The plastic material carries U/L recognition 94V-0.

Type No.		Max. Average Forward Rectified Current		Max. Repetitive Peak Reverse Voltage	Max. Repetitive Peak Forward Current	Max. Forward Surge Current	Max. Forward Voltage Drop at Ta=25°C		Max. Reverse Current at Ta=25°C
		$I_{F(AV)}$ @	T_L	V_{RRM}	I_{FRM}	I_{FSM}	V_F @	I_F	I_R
Axial Lead	SMD	(A)	(°C)	(V)	(A)	(A)	(V)	(A)	(mA)

SBO20 Series, 1.5 A, Case Type: DO-41



SBO20		1.5	75	20	-	50	0.50	1.5	0.5
SBO30		1.5	75	30	-	50	0.50	1.5	0.5
SBO40		1.5	75	40	-	50	0.50	1.5	0.5
SBO50		1.5	100	50	-	50	0.70	1.5	0.5
SBO60		1.5	100	60	-	50	0.70	1.5	0.5
SBO70		1.5	100	70	-	50	0.70	1.5	0.5
SBO80		1.5	100	80	-	50	0.79	1.5	0.5
SBO90		1.5	100	90	-	50	0.79	1.5	0.5
SBOB0		1.5	100	100	-	50	0.79	1.5	0.5

ERB81 Series, 2.0 A, Case Type: D2



ERB81-004		2.0	25 (Ta)	40	-	100	0.55	2.0	5.0
ERB83-004		2.0	25 (Ta)	40	-	100	0.55	2.0	5.0
ERB83-006		2.0	104	60	-	60	0.58	2.0	5.0
ERB84-009		2.0	25 (Ta)	90	-	60	0.90	2.0	2.0

SB220/SK22 Series, 2.0 A, Case Type: D2/SMB





SB220	**SK22**	2.0	75	20	10	60	0.50	2.0	0.5
SB230	**SK23**	2.0	75	30	10	60	0.50	2.0	0.5
SB240	**SK24**	2.0	75	40	10	60	0.50	2.0	0.5
SB250	**SK25**	2.0	100	50	10	60	0.74	2.0	0.5
SB260	**SK26**	2.0	100	60	10	60	0.74	2.0	0.5
SB270	**SK27**	2.0	100	70	10	60	0.74	2.0	0.5
SB280	**SK28**	2.0	100	80	10	60	0.79	2.0	0.5
SB290	**SK29**	2.0	100	90	10	60	0.79	2.0	0.5
SB2B0	**SK2B**	2.0	100	100	10	60	0.79	2.0	0.5

Also available in Axial DO-41 and SMD SMA Case Types. Use suffix "S" to order (e.g. SB220S, SK22S)

SR220 - SR2100 Series, 2.0 A, Case Type: DO-41



SR220		2.0	40	20	-	50	0.55	2.0	2.0
SR230		2.0	40	30	-	50	0.55	2.0	2.0
SR240		2.0	40	40	-	50	0.55	2.0	2.0
SR250		2.0	60	50	-	50	0.70	2.0	2.0
SR260		2.0	60	60	-	50	0.70	2.0	2.0
SR290		2.0	60	90	-	50	0.85	2.0	2.0
SR2100		2.0	60	100	-	50	0.85	2.0	2.0

RK33 Series, 2.0 - 2.5 A, Case Type: D2A



RK33		2.5	75	30	15	50	0.55	2.5	5.0
RK34		2.5	75	40	15	50	0.55	2.5	5.0
RK36		2.0	75	60	15	50	0.62	2.0	2.0
RK39		2.0	75	90	15	50	0.81	2.0	3.0

Schottky Barrier Rectifiers

The plastic material carries U/L recognition 94V-0.

Type No.		Max. Average Forward Rectified Current		Max. Repetitive Peak Reverse Voltage	Max. Repetitive Peak Forward Current	Max. Forward Surge Current	Max. Forward Voltage Drop at Ta=25°C		Max. Reverse Current at Ta=25°C
		$I_{F(AV)}$ @	T_L	V_{RRM}	I_{FRM}	I_{FSM}	V_F @	I_F	I_R
Axial Lead	SMD	(A)	(°C)	(V)	(A)	(A)	(V)	(A)	(mA)

SBT20 Series, 2.5 A, Case Type: D2A



SBT20		2.5	75	20	-	50	0.50	1.5	0.5
SBT30		2.5	75	30	-	50	0.50	1.5	0.5
SBT40		2.5	75	40	-	50	0.50	1.5	0.5
SBT50		2.5	100	50	-	50	0.74	1.5	0.5
SBT60		2.5	100	60	-	50	0.74	1.5	0.5
SBT70		2.5	100	70	-	50	0.74	1.5	0.5
SBT80		2.5	100	80	-	50	0.79	1.5	0.5
SBT90		2.5	100	90	-	50	0.79	1.5	0.5
SBTB0		2.5	100	100	-	50	0.79	1.5	0.5

ERC Series, 2.6 - 3.0 A, Case Type: DO-201AD



ERC81-004		2.6	25	40	-	120	0.55	3.0	5.0
ERC81-006		3.0	104	60	-	80	0.58	3.0	5.0
ERC84-009		3.0	85	90	-	120	0.80	3.0	0.5

RB055L-40 3.0 A, Case Type: SMA



RB055L-40		3.0	25	40	-	40	0.65	3.0	0.5

1N5820/SKN0 Series, 3 A, Case Type: DO-201AD/SMC





1N5820	**SKN0**	3.0	95	20	15	80	0.475	3.0	2.0
1N5821	**SKN1**	3.0	95	30	15	80	0.500	3.0	2.0
1N5822	**SKN2**	3.0	95	40	15	80	0.525	3.0	2.0

Also available in Axial D2A and SMD SMB Case Types. Use suffix "S" to order (e.g. 1N5820S, SKN0S)

SB320/SK32 Series, 3 A, Case Type: DO-201AD/SMC





SB320	**SK32**	3.0	75	20	15	80	0.50	3.0	0.5
SB330	**SK33**	3.0	75	30	15	80	0.50	3.0	0.5
SB340	**SK34**	3.0	75	40	15	80	0.50	3.0	0.5
SB350	**SK35**	3.0	100	50	15	80	0.74	3.0	0.5
SB360	**SK36**	3.0	100	60	15	80	0.74	3.0	0.5
SB370	**SK37**	3.0	100	70	15	80	0.74	3.0	0.5
SB380	**SK38**	3.0	100	80	15	80	0.79	3.0	0.5
SB390	**SK39**	3.0	100	90	15	80	0.79	3.0	0.5
SB3B0	**SK3B**	3.0	100	100	15	80	0.79	3.0	0.5

Also available in Axial D2A and SMD SMB Case Types. Use suffix "S" to order(e.g. SB320S, SK32S), SMA Case Types. Use suffix "A" to order (e.g. SK32A).

MBR320 Series, 3 A, Case Type: DO-201AD



MBR320		3.0	65 (Ta)	20	-	80	0.60	3.0	0.6
MBR330		3.0	65 (Ta)	30	-	80	0.60	3.0	0.6
MBR340		3.0	65 (Ta)	40	-	80	0.60	3.0	0.6
MBR350		3.0	65 (Ta)	50	-	80	0.74	3.0	0.6
MBR360		3.0	65 (Ta)	60	-	80	0.74	3.0	0.6

Schottky Barrier Rectifiers

The plastic material carries U/L recognition 94V-0.

Type No.		Max. Average Forward Rectified Current		Max. Repetitive Peak Reverse Voltage	Max. Repetitive Peak Forward Current	Max. Forward Surge Current	Max. Forward Voltage Drop at Ta=25°C		Max. Reverse Current at Ta=25°C
		$I_{F(AV)}$ @	T_L	V_{RRM}	I_{FRM}	I_{FSM}	V_F @	I_F	I_R
Axial Lead	SMD	(A)	(°C)	(V)	(A)	(A)	(V)	(A)	(mA)
RK43 Series, 3.0 - 3.5 A, Case Type: DO-201AD									
RK43		3.0	109	30	-	80	0.55	3.0	5.0
RK44		3.0	109	40	-	80	0.55	3.0	5.0
RK46		3.5	109	60	-	70	0.62	3.5	3.0
RK49		3.5	109	90	-	60	0.81	3.5	5.0
31DQ03 Series, 3.3 A, Case Type: DO-201AD									
31DQ03		3.3	48 (Tc)	30	-	120	0.55	3.0	3.0
31DQ04		3.3	48 (Tc)	40	-	120	0.55	3.0	3.0
31DQ09		3.3	53 (Tc)	90	-	34	0.85	3.5	1.0
31DQ10		3.3	53 (Tc)	100	-	34	0.85	3.5	1.0
SB520/SK52 Series, 5 A, Case Type: DO-201AD/SMC									
SB520	**SK52**	5.0	60	20	25	150	0.55	5.0	0.5
SB530	**SK53**	5.0	60	30	25	150	0.55	5.0	0.5
SB540	**SK54**	5.0	60	40	25	150	0.55	5.0	0.5
SB550	**SK55**	5.0	80	50	25	150	0.67	5.0	0.5
SB560	**SK56**	5.0	80	60	25	150	0.67	5.0	0.5
SB570	**SK57**	5.0	80	70	25	150	0.67	5.0	0.5
SB580	**SK58**	5.0	80	80	25	150	0.79	5.0	0.5
SB590	**SK59**	5.0	80	90	25	150	0.79	5.0	0.5
SB5B0	**SK5B**	5.0	80	100	25	150	0.79	5.0	0.5
SR520 Series, 5.0 A, Case Type: DO-201AD									
SR520		5.0	60	20	-	150	0.57	5.0	10
SR530		5.0	60	30	-	120	0.57	5.0	10
SR540		5.0	60	40	-	120	0.57	5.0	10
SR550		5.0	85	50	-	120	0.70	5.0	10
SR560		5.0	85	60	-	120	0.70	5.0	10
SB5150-SB5200, 5.0 A, Case Type: DO-201AD									
SB5150		5.0	25(Ta)	150	-	100	0.85	5.0	0.01
SB5200		5.0	25(Ta)	200	-	100	0.87	5.0	0.01
MBR735 Series, 7.5 A, Case Type: TO-220AC									
MBR735		7.5	105(Tc)	35	-	150	-	-	0.1
MBR745		7.5	105(Tc)	45	-	150	-	-	0.1
MBR750		7.5	105(Tc)	50	-	150	0.75	7.5	0.5
MBR760		7.5	105(Tc)	60	-	150	0.75	7.5	0.5
SBL1030 Series, 10 A, Case Type: TO-220AC									
SBL1030		10	110(Tc)	30	-	250	0.6	10	1.0
SBL1040		10	110(Tc)	40	-	250	0.6	10	1.0







Also available in Axial D2A and SMD SMB Case Types. Use suffix "S" to order (e.g. SB520S, SK52S)





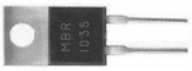

Schottky Barrier Rectifiers

The plastic material carries U/L recognition 94V-0.

Type No.		Max. Average Forward Rectified Current		Max. Repetitive Peak Reverse Voltage	Max. Repetitive Peak Forward Current	Max. Forward Surge Current	Max. Forward Voltage Drop at Ta=25°C		Max. Reverse Current at Ta=25°C
		$I_{F(AV)}$ @	T_L	V_{RRM}	I_{FRM}	I_{FSM}	V_F @	I_F	I_R
Axial Lead	SMD	(A)	(°C)	(V)	(A)	(A)	(V)	(A)	(mA)
SD1045/SD1645, 10-16 A, Case Type: DO-201AD									
SD1045		10	100	45	-	340	0.55	10	0.8
SD1545		15	25(Tc)	45	-	300	0.54	15	0.2
SD1645		16	25(Tc)	45	-	300	0.55	16	0.2
SK1045/SK1545, 10-15 A, Case Type: SMC									
	SK1045	10	100	45	-	340	0.55	10	0.8
	SK1545	15	25(Tc)	45	-	300	0.54	15	0.2
MBRB1045/MBRB1545, 10-15 A, Case Type: D2PAK									
	MBRB1045	10	120(Tc)	45	-	150	0.57	10	0.20
	MBRB1545	15	120(Tc)	45	-	150	0.54	15	0.25
MBR1035 Series, 10 A, Case Type: TO-220AC									
MBR1035		10	125(Tc)	35	-	150	0.84	10	0.10
MBR1045		10	125(Tc)	45	-	150	0.84	10	0.10
MBR1050		10	125(Tc)	50	-	150	0.80	10	0.15
MBR1060		10	125(Tc)	60	-	150	0.80	10	0.15
SBL1030CT Series, 10 - 16 A, Case Type: TO-220AB									
SBL1030CT		10	95(Tc)	30	-	250	0.55	5	0.5
SBL1040CT		10	95(Tc)	40	-	250	0.55	5	0.5
SBL1630CT		16	95(Tc)	30	-	250	0.55	8	0.5
SBL1640CT		16	95(Tc)	40	-	250	0.55	8	0.5
MBR1660CT Series, 16 A, Case Type: TO-220AB									
MBR1660CT		16	115(Tc)	60	-	150	0.75	8.0	1.00
MBR16100CT		16	133(Tc)	100	-	150	0.84	16	0.10
MBR1635 Series, 16 A, Case Type: TO-220AC									
MBR1635		16	125(Tc)	35	-	150	0.63	16	0.20
MBR1645		16	125(Tc)	45	-	150	0.63	16	0.20
MBR1650		16	125(Tc)	50	-	150	0.75	16	1.00
MBR1660		16	125(Tc)	60	-	150	0.75	16	1.00
MBRF16H35 Series, 16 A, Case Type: ITO-220AC									
MBRF16H35		16	130(Tc)	35	-	150	0.66	16	0.10
MBRF16H45		16	130(Tc)	45	-	150	0.66	16	0.10
MBRF16H50		16	130(Tc)	50	-	150	0.73	16	0.10
MBRF16H60		16	130(Tc)	60	-	150	0.73	16	0.10

Schottky Barrier Rectifiers

The plastic material carries U/L recognition 94V-0.

Type No.		Max. Average Forward Rectified Current		Max. Repetitive Peak Reverse Voltage	Max. Repetitive Peak Forward Current	Max. Forward Surge Current	Max. Forward Voltage Drop at Ta=25°C		Max. Reverse Current at Ta=25°C
		$I_{F(AV)}$ @	T_L	V_{RRM}	I_{FRM}	I_{FSM}	V_F @	I_F	I_R
Axial Lead	SMD	(A)	(°C)	(V)	(A)	(A)	(V)	(A)	(mA)

MBR2035CT Series, 20 A, Case Type: TO-220AB

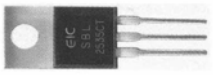

MBR2035CT		20	135(Tc)	35	-	150	0.57	10	0.10
MBR2045CT		20	135(Tc)	45	-	150	0.57	10	0.10
MBR2050CT		20	135(Tc)	50	-	150	0.8	10	0.15
MBR2060CT		20	135(Tc)	60	-	150	0.8	10	0.15

MBR2535CT Series, 30 A, Case Type: TO-220AB

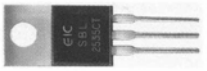

MBR2535CT		30	130(Tc)	35	30	150	0.82	30	0.20
MBR2545CT		30	130(Tc)	45	30	150	0.82	30	0.20
MBR2550CT		30	130(Tc)	50	30	150	0.75	15	1.00
MBR2560CT		30	130(Tc)	60	30	150	0.75	15	1.00

MBRB3045CT Series, 30 A, Case Type: D^2PAK



	MBRB3045CT	30	110(Tc)	45	-	200	0.76	30	1.0

MBR3045CT Series, 30 A, Case Type: TO-220AB

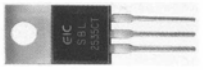

MBR3045CT		30	110(Tc)	45	-	200	0.76	30	1.0

SBL2030PT Series, 20 - 40 A, Case Type: TO-247AD

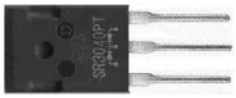

SBL2030PT		20	105(Tc)	30	-	250	0.55	10	1.0
SBL2040PT		20	105(Tc)	40	-	250	0.55	10	1.0
SBL3030PT		30	100(Tc)	30	-	250	0.55	15	1.0
SBL3040PT		30	100(Tc)	40	-	250	0.55	15	1.0
SBL4030PT		40	100(Tc)	30	-	250	0.58	20	10
SBL4040PT		40	100(Tc)	40	-	250	0.58	20	10

MBR3035PT Series, 30 A, Case Type: TO-247AD

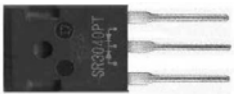

MBR3035PT		30	105(Tc)	35	30	200	0.76	30	1.0
MBR3045PT		30	105(Tc)	45	30	200	0.76	30	1.0
MBR3050PT		30	125(Tc)	50	30	300	0.75	20	5.0
MBR3060PT		30	125(Tc)	60	30	300	0.75	20	5.0

MBR4035PT Series, 40 A, Case Type: TO-247AD

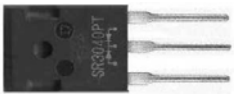

MBR4035PT		40	120(Tc)	35	40	400	0.7	20	10
MBR4045PT		40	120(Tc)	45	40	400	0.7	20	10
MBR4050PT		40	120(Tc)	50	40	400	0.8	20	10
MBR4060PT		40	120(Tc)	60	40	400	0.8	20	10

Schottky Barrier Rectifiers

The plastic material carries U/L recognition 94V-0.

Type No.		Max. Average Forward Rectified Current		Max. Repetitive Peak Reverse Voltage	Max. Repetitive Peak Forward Current	Max. Forward Surge Current	Max. Forward Voltage Drop at Ta=25°C		Max. Reverse Current at Ta=25°C
		$I_{F(AV)}$ @	T_L	V_{RRM}	I_{FRM}	I_{FSM}	V_F @	I_F	I_R
Axial Lead	SMD	(A)	(°C)	(V)	(A)	(A)	(V)	(A)	(mA)
MBRS1 Series, 1 A, Case Type: SMB									
	MBRS120T3	1.0	115	20	-	40	0.60	1.0	1.0
	MBRS130LT3	1.0	120	30	-	40	0.40	1.0	1.0
	MBRS140	1.0	115	40	-	40	0.60	1.0	1.0
	MBRS1100	1.0	120	100	-	50	0.75	1.0	0.5
MBRS240LT3G, 2 A, Case Type: SMB									
	MBRS240LT3G	2.0	100(Tc)	40	-	25	0.43	2.0	2.0
MBRS3200, 3 A, Case Type: SMB									
	MBRS3200	3.0	120	200	-	100	0.84	3.0	1.0
MBRS3 Series, 3 A, Case Type: SMC									
	MBRS330T3	3.0	100	30	-	80	0.50	3.0	2.00
	MBRS340T3	3.0	100	40	-	80	0.53	3.0	2.00
	MBRS360T3	3.0	137	60	-	125	0.74	3.0	0.15
	MBRS3100	3.0	100	100	-	130	0.79	3.0	0.05
	MBRS3201	3.0	70(Tc)	200	-	100	0.84	3.0	1.00
MBRS4201, 4 A, Case Type: SMC									
	MBRS4201	4.0	70	200	-	100	0.86	4.0	1.0
SB5150/SB5200, 5 A, Case Type: DO-201AD									
	SB5150	5.0	110(Ta)	150	-	100	0.85	5.0	0.01
	SB5200	5.0	110(Ta)	200	-	100	0.87	5.0	0.01
FST10 Series, 10 A, Case Type: TO-220AB									
FST10120		10	162	120	-	200	0.82	5	0.1
FST10130		10	162	130	-	200	0.82	5	0.1
FST10150		10	162	150	-	200	0.82	5	0.1
FST10180		10	137	180	-	200	0.84	5	0.1
FST10200		10	137	200	-	200	0.84	5	0.1
MS10 Series, 10 A, Case Type: TO-220AC									
MS10180		10	155	180	-	225	0.88	10	0.1
MS10200		10	155	200	-	225	0.88	10	0.1

Schottky Barrier Rectifiers

The plastic material carries U/L recognition 94V-0.

Type No.		Max. Average Forward Rectified Current		Max. Repetitive Peak Reverse Voltage	Max. Repetitive Peak Forward Current	Max. Forward Surge Current	Max. Forward Voltage Drop at Ta=25°C		Max. Reverse Current at Ta=25°C
		$I_{F(AV)}$ @	T_L	V_{RRM}	I_{FRM}	I_{FSM}	V_F @	I_F	I_R
Axial Lead	SMD	(A)	(°C)	(V)	(A)	(A)	(V)	(A)	(mA)
MS16 Series, 16 A, Case Type: TO-220AC									
MS16180		16	146	180	-	250	0.88	16	0.1
MS16200		16	146	200	-	250	0.88	16	0.1
FST20 Series, 20 A, Case Type: TO-220AB									
FST20120		20	157	120	-	225	0.83	10	0.1
FST20130		20	157	130	-	225	0.83	10	0.1
FST20150		20	157	150	-	225	0.83	10	0.1
FST20180		20	155	180	-	225	0.88	10	0.1
FST20200		20	155	200	-	225	0.88	10	0.1
MBR20200CT, 20 A, Case Type: TO-220AB									
MBR20200CT		20	125(Tc)	200	20	150	1.00	20	1.0
MS20 Series, 20 A, Case Type: TO-220AC									
MS20180		20	141	180	-	250	0.85	20	0.1
MS20200		20	141	200	-	250	0.85	20	0.1
FST31 Series, 30 A, Case Type: TO-220AB									
FST31120		30	153	120	-	250	0.85	15	0.25
FST31130		30	153	130	-	250	0.85	15	0.25
FST31150		30	153	150	-	250	0.85	15	0.25
FST31180		30	150	180	-	250	0.83	15	0.10
FST31200		30	150	200	-	250	0.83	15	0.10

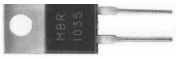

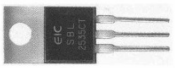

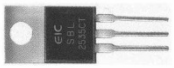



* For package ITO-220AB part number MBRF20200CT

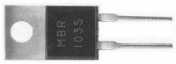

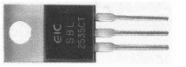

Schottky Barrier Rectifiers

Type No.		Max. Average Forward Rectified Current		Max. Repetitive Peak Reverse Voltage	Max. Repetitive Peak Forward Current	Max. Forward Surge Current	Max. Forward Voltage Drop at Ta=25°C		Max. Reverse Current at Ta=25°C	Max. Power Dissipation
		$I_{F(AV)}$ @ Ta		V_{RRM}	I_{FRM}	I_{FSM}	V_F @ I_F		I_R	P_D
Axial Lead	SMD	(mA)	(°C)	(V)	(mA)	(A)	(V)	(mA)	(μA)	(mW)
1N5711/LL5711, Case Type: DO-35 / MiniMELF										
1N5711	**LL5711**	1.0	25	70	-	2.0	0.41	1.0	0.2	400
1N6263	**LL6263**	1.0	25	60	-	2.0	0.41	1.0	0.2	400
1SS88 Series, Case Type: DO-35										
1SS88		15	25	10	-	-	0.43	1.0	0.2	150
1SS106		30	25	10	-	-	4.50	1.0	70	-
1SS108		15	25	30	-	-	3.00	1.0	100	-
1SS165 Series, Case Type: DO-34										
1SS165		15	25	10	-	-	0.6	10	0.2	150
1SS166		15	25	10	-	-	0.6	10	0.2	150
1SS198		30	25	10	-	-	1.0	4.5	70	-
1SS199		15	25	30	-	-	1.0	2.0	100	-
1SS286		35	25	25	-	-	0.6	10	0.01	150
BAT41 / LL41 Series, Case Type: DO-35 / MiniMELF										
BAT41	**LL41**	100	25	100	350	0.75	0.45	1.0	0.1	400
BAT42	**LL42**	200	25	30	500	4.00	0.40	10	0.5/1.0	200
BAT43	**LL43**	200	25	30	500	4.00	0.33	2.0	0.5/1.0	200
BAT46	**LL46**	150	25	100	350	0.75	0.45	10	5.0	150/200
BAT48	**LL48**	350	25	40	1A	0.75	0.40	10	25	330
BAT81 Series, Case Type: DO-34										
BAT81		30	25	40	150	0.5	0.41	1.0	0.2	200
BAT82		30	25	50	150	0.5	0.41	1.0	0.2	200
BAT83		30	25	60	150	0.5	0.41	1.0	0.2	200
BAT85/BAS85 Series, Case Type: DO-35 / MiniMELF										
BAT85	**BAS85**	200	25	30	-	0.6	0.40	10	2.0	200
BAT86	**BAS86**	200	50	50	500	-	0.45	10	5.0	200
HSS100 Series, Case Type: DO-34										
HSS100		35	25	60	-	-	0.9	20	0.10	150
HSS101		35	25	30	-	-	0.7	10	0.01	150
HSS102		35	25	70	-	-	1.1	20	0.01	150

Schottky Barrier Rectifiers

Type No.		Max. Average Forward Rectified Current		Max. Repetitive Peak Reverse Voltage	Max. Repetitive Peak Forward Current	Max. Forward Surge Current	Max. Forward Voltage Drop at Ta=25°C		Max. Reverse Current at Ta=25°C	Max. Power Dissipation
		$I_{F(AV)}$ @ Ta		V_{RRM}	I_{FRM}	I_{FSM}	V_F @ I_F		I_R	P_D
Axial Lead	SMD	(mA)	(°C)	(V)	(mA)	(A)	(V)	(mA)	(μA)	(mW)
MA700 Series, Case Type: DO-34										
MA700		150	25	15	-	-	0.4	10	0.10	-
MA700A		150	25	30	-	-	0.4	1.0	0.15	-
RB441Q-40 & RB721Q-40. Case Type: DO-34										
RB441Q-40		10	25	40	-	1.0	0.34	10	100	-
RB721Q-40		30	25	40	-	200mA	0.37	1.0	0.5	-
SB0015-03A & SB0030-01A. Case Type: DO-34										
SB0015-03A		15	25	30	-	-	1.0	3.0	100	-
SB0030-01A		30	25	10	-	-	1.0	4.5	70	-
SD101A/LL101A Series, Case Type: DO-35/MiniMELF										
SD101A	**LL101A**	30	25	60	-	2.0	1.00	15	0.2	400
SD101B	**LL101B**	30	25	50	-	2.0	0.95	15	0.2	400
SD101C	**LL101C**	30	25	40	-	2.0	0.90	15	0.2	400
BAS81 - BAS83 , Case Type: MiniMELF										
BAS81		30	25	40	-	500mA	1.0	15	0.2	-
BAS82		30	25	50	-	500mA	1.0	15	0.2	-
BAS83		30	25	60	-	500mA	1.0	15	0.2	-
SD103A/LL103A Series, Case Type: DO-35/MiniMELF										
SD103A	**LL103A**	200	25	40	-	15	0.55	200	5.0	400
SD103B	**LL103B**	200	25	50	-	15	0.55	200	5.0	400
SD103C	**LL103C**	200	25	60	-	15	0.55	200	5.0	400

Schottky Barrier Rectifiers

The plastic material carries U/L recognition 94V-0.

Type No.	Max. Average Forward Rectified Current		Max. Repetitive Peak Reverse Voltage	Max. Repetitive Peak Forward Current	Max. Forward Surge Current	Max. Forward Voltage Drop at Ta=25°C		Max. Reverse Current at Ta=25°C	Max. Power Dissipation
	$I_{F(AV)}$ @ Ta		V_{RRM}	I_{FRM}	I_{FSM}	V_F @ I_F		I_R	P_D
SMD	(mA)	(°C)	(V)	(mA)	(A)	(V)	(mA)	(μA)	(mW)

BAT42W Series, Case Type: SOD-123



BAT42W*	200	25	30	-	4.0	1.00	200	0.5	200
BAT43W*	200	25	30	-	4.0	1.00	200	0.5	200
BAT54W*	200	25	30	-	1.0	0.65	100	2.0	200
BAT46W	150	25	100	-	0.75	1.00	250	5.0	200

*** Also available in SMD SOD-323 Case Types. Use suffix "S" to order (e.g. BAT42WS, BAT43WS, BAT54WS) and SOD-523 Case Types. Use suffix "T" to order (e.g. BAT42WT, BAT43WT, BAT54WT)**

MBR0520L, MBR0520-04 , Case Type: SOD-123



MBR0520L	500	90	20	-	5.5	0.385	500	250	-
MBR0520	500	129(T_L)	20	-	6.5	0.440	500	150	-
MBR0530	500	100	30	-	5.5	0.430	500	130	-
MBR0540	500	25	40	-	5.5	0.510	500	20	-

1N5817WB Series, 1 A, Case Type: SOD-123



1N5817WB	1(A)	25	20	-	-	0.45	1.0	1.0	450
1N5818WB	1(A)	25	30	-	-	0.55	1.0	1.0	450
1N5819WB	1(A)	25	40	-	-	0.60	1.0	1.0	450

MBR130W, Case Type: SOD-123



MBR130W	1(A)	65(T_L)	30	-	5.5	0.50	0.7	200	-

SD101AW-CW Series, Case Type: SOD-123



SD101AW	15	25	60	-	2.0	1.00	15	0.2	400
SD101BW	15	25	50	-	2.0	0.95	15	0.2	400
SD101CW	15	25	40	-	2.0	0.90	15	0.2	400

SD103AW-CWS Series, Case Type: SOD-123



SD103AW	350	25	40	-	2.0	0.60	200	5.0	400
SD103BW	350	25	30	-	2.0	0.60	200	5.0	400
SD103CW	350	25	20	-	2.0	0.60	200	5.0	400

Schottky Barrier Rectifiers

The plastic material carries U/L recognition 94V-0.

Type No.	Max. Average Forward Rectified Current		Max. Repetitive Peak Reverse Voltage	Max. Repetitive Peak Forward Current	Max. Forward Surge Current	Max. Forward Voltage Drop at Ta=25°C		Max. Reverse Current at Ta=25°C	Max. Power Dissipation
	$I_{F(AV)}$ @ Ta		V_{RRM}	I_{FRM}	I_{FSM}	V_F @ I_F		I_R	P_D
SMD	(mA)	(°C)	(V)	(mA)	(A)	(V)	(mA)	(μA)	(mW)
SD101AWS Series, Case Type: SOD-323									
SD101AWS	30	25	60	-	2.0	1.00	15	0.2	150
SD101BWS	30	25	50	-	2.0	0.95	15	0.2	150
SD101CWS	30	25	40	-	2.0	0.90	15	0.2	150
SD103AWS Series, Case Type: SOD-323									
SD103AWS	200	25	40	-	2.0	0.60	200	5.0	150
SD103BWS	200	25	30	-	2.0	0.60	200	5.0	150
SD103CWS	200	25	20	-	2.0	0.60	200	5.0	150
RB751V-40/RB501V-40 , Case Type: SOD-323									
RB751V-40*	30	25	40	-	0.2	0.37	1.0	0.5	-
RB501V-40	100	25	45	-	1.0	0.55	100	30	-
1SS367 , Case Type: SOD-323									
1SS367	100	25	15	-	1.0	0.3	5.0	20	-
SDB412WS , Case Type: SOD-323									
SDB412WS	500	25	40	-	0.5	0.5	500	200	-
RB520S-30/RB521S-30, -40 , Case Type: SOD-523									
RB520S-30	200	25	30	-	1.0	0.60	200	1.0	-
RB521S-30	200	25	30	-	1.0	0.50	200	30	-
RB521S-40	200	25	40	-	1.0	0.50	200	90	-
1SS388, Case Type: SOD-523									
1SS388	100	25	45	-	1.0	0.6	50	5.0	150
RB521G-30, Case Type: SOD-523									
RB521G-30	100	25	30	-	1.0	0.35	10	10.0	-









*** Also available in SMD SOD-523 Case Types. Use suffix "S" to order p/n RB751S-40**

Schottky Barrier Rectifiers

The plastic material carries U/L recognition 94V-0.

Type No.	Max. Average Forward Rectified Current		Max. Repetitive Peak Reverse Voltage	Max. Repetitive Peak Forward Current	Max. Forward Surge Current	Max. Forward Voltage Drop at Ta=25°C		Max. Reverse Current at Ta=25°C	Max. Power Dissipation
	$I_{F(AV)}$ @ Ta		V_{RRM}	I_{FRM}	I_{FSM}	V_F @ I_F		I_R	P_D
SMD	(mA)	(°C)	(V)	(mA)	(A)	(V)	(mA)	(μA)	(mW)
1SS294, Case Type: SOT-23 									
1SS294	300	25	45	-	-	0.6	10	5.0	150
BAT400D, Case Type: SOT-23 									
BAT400D	500	25	40	-	3	0.55	500	50.0	480
BAT54 Series, Case Type: SOT-23 									
BAT54	200	25	30	0.3	0.6	0.5	30	2.0	230
BAT54A	200	25	30	0.3	0.6	0.5	30	2.0	230
BAT54C	200	25	30	0.3	0.6	0.5	30	2.0	230
BAT54S	200	25	30	0.3	0.6	0.5	30	2.0	230
BAS40 Series, Case Type: SOT-23 									
BAS40	200	25	40	-	0.6	1.0	40	0.2	-
BAS40-04	200	25	40	-	0.6	1.0	40	0.2	-
BAS40-05	200	25	40	-	0.6	1.0	40	0.2	-
BAS40-06	200	25	40	-	0.6	1.0	40	0.2	-
BAS40W Series, Case Type: SOT-23 									
BAS40W	200	25	40	-	0.6	1.0	40	0.2	200
BAS40-04W	200	25	40	-	0.6	1.0	40	0.2	200
BAS40-05W	200	25	40	-	0.6	1.0	40	0.2	200
BAS40-06W	200	25	40	-	0.6	1.0	40	0.2	200
BAS70 Series, Case Type: SOT-23 									
BAS70	200	25	70	-	0.6	1.0	15	0.1	200
BAS70-04	200	25	7l0	-	0.6	1.0	15	0.1	200
BAS70-05	200	25	70	-	0.6	1.0	15	0.1	200
BAS70-06	200	25	70	-	0.6	1.0	15	0.1	200

Zener Diodes 0.20 W

The plastic material carries U/L recognition 94V-0.

Type No.	Marking	Zener Voltage (Note 1)			Test Current	Zener Impedance		Test Current	Leakage Current	
		V_Z @ I_{ZT} (V)			I_{ZT}	Z_{ZT} @ I_{ZT}	Z_{ZK} @ I_{ZK}	I_{ZK}	I_R @ V_R	
		Min.	Nom.	Max.	(mA)	(Ω)	(Ω)	(mA)	(μA)	(V)
MM5Z2V4 Series, 0.2 W, Case Type : SOD-523										
MM5Z2V4	Z7	2.2	2.4	2.6	5	100	1000	1.0	50	1.0
MM5Z2V7	A8	2.5	2.7	2.9	5	100	1000	1.0	20	1.0
MM5Z3V0	B8	2.8	3.0	3.2	5	100	1000	1.0	10	1.0
MM5Z3V3	C8	3.1	3.3	3.5	5	95	1000	1.0	5	1.0
MM5Z3V6	D8	3.4	3.6	3.8	5	90	1000	1.0	5	1.0
MM5Z3V9	E8	3.7	3.9	4.1	5	90	1000	1.0	3	1.0
MM5Z4V3	F8	4.0	4.3	4.6	5	90	1000	1.0	3	1.0
MM5Z4V7	G8	4.4	4.7	5.0	5	80	800	1.0	3	2.0
MM5Z5V1	H8	4.8	5.1	5.4	5	60	500	1.0	2	2.0
MM5Z5V6	I8	5.2	5.6	6.0	5	40	200	1.0	1	2.0
MM5Z6V2	J8	5.8	6.2	6.6	5	10	100	1.0	3	4.0
MM5Z6V8	K8	6.4	6.8	7.2	5	15	160	1.0	2	4.0
MM5Z7V5	L8	7.0	7.5	7.9	5	15	160	1.0	1	5.0
MM5Z8V2	M8	7.7	8.2	8.7	5	15	160	1.0	0.7	5.0
MM5Z9V1	N8	8.5	9.1	9.6	5	15	160	1.0	0.2	7.0
MM5Z10V	O8	9.4	10	10.6	5	20	160	1.0	0.1	8.0
MM5Z11V	P8	10.4	11	11.6	5	20	160	1.0	0.1	8.0
MM5Z12V	Q8	11.4	12	12.7	5	25	80	1.0	0.1	8.0
MM5Z13V	R8	12.4	13.25	14.1	5	30	80	1.0	0.1	8.0
MM5Z15V	S8	14.3	15	15.8	5	30	80	1.0	0.05	10.5
MM5Z16V	T8	15.3	16.2	17.1	5	40	80	1.0	0.05	11.2
MM5Z18V	U8	16.8	18	19.1	5	45	80	1.0	0.05	12.6
MM5Z20V	V8	18.8	20	21.2	5	55	100	1.0	0.05	14.0
MM5Z22V	W8	20.8	22	23.3	5	55	100	1.0	0.05	15.4
MM5Z24V	X8	22.8	24.2	25.6	5	70	120	1.0	0.05	16.8
MM5Z27V	Y8	25.1	27	28.9	2	80	300	1.0	0.05	18.9
MM5Z30V	Z8	28	30	32	2	80	300	1.0	0.05	21.0
MM5Z33V	A9	31	33	35	2	80	300	1.0	0.05	23.2
MM5Z36V	B9	34	36	38	2	90	500	1.0	0.05	25.2
MM5Z39V	C9	37	39	41	2	130	500	1.0	0.05	27.3
MM5Z43V	D9	40	43	46	2	150	500	1.0	0.05	30.1
MM5Z47V	E9	44	47	50	2	170	500	1.0	0.05	32.9
MM5Z51V	F9	48	51	54	2	180	500	1.0	0.05	35.7
MM5Z56V	G9	52	56	60	2	200	500	1.0	0.05	39.2
MM5Z62V	H9	58	62	66	2	215	500	1.0	0.05	43.4
MM5Z68V	I9	64	68	72	2	240	500	1.0	0.05	47.6
MM5Z75V	J9	70	75	79	2	255	500	1.0	0.05	52.5



Note :

(1) Zener voltage is measured with a pulse test current I_Z at an ambient temperature of 25 °C.

Zener Diodes 0.20 W

The plastic material carries U/L recognition 94V-0.

Type No.	Marking	Zener Voltage (1) V_Z @ I_{ZT} (V)			Test Current I_{ZT}	Zener Impedance Z_{ZT} @ I_{ZT}	Test Current I_{ZT}	Leakage Current I_R @ V_R	
		Min.	Nom.	Max.	(mA)	(Ω)	(mA)	(μA)	(V)
MM5Z2B4 Series, 0.2 W, Case Type : SOD-523									
MM5Z2B4	XY	2.352	2.4	2.448	5.0	100	5.0	120	1.0
MM5Z2B7	XZ	2.646	2.7	2.754	5.0	110	5.0	120	1.0
MM5Z3B0	FR	2.940	3.0	3.060	5.0	120	5.0	50	1.0
MM5Z3B3	FX	3.234	3.3	3.366	5.0	130	5.0	20	1.0
MM5Z3B6	FY	3.528	3.6	3.672	5.0	130	5.0	10	1.0
MM5Z3B9	FZ	3.822	3.9	3.978	5.0	130	5.0	5.0	1.0
MM5Z4B3	HA	4.214	4.3	4.386	5.0	130	5.0	5.0	1.0
MM5Z4B7	HB	4.606	4.7	4.794	5.0	130	5.0	2.0	1.0
MM5Z5B1	HC	4.998	5.1	5.202	5.0	130	5.0	2.0	1.5
MM5Z5B6	HD	5.488	5.6	5.712	5.0	80	5.0	1.0	2.5
MM5Z6B2	HE	6.076	6.2	6.324	5.0	50	5.0	1.0	3.0
MM5Z6B8	HF	6.664	6.8	6.936	5.0	30	5.0	0.5	3.5
MM5Z7B5	HH	7.350	7.5	7.650	5.0	30	5.0	0.5	4.0
MM5Z8B2	HJ	8.036	8.2	8.364	5.0	30	5.0	0.5	5.0
MM5Z9B1	HK	8.918	9.1	9.282	5.0	30	5.0	0.5	6.0
MM5ZB10	HM	9.80	10	10.20	5.0	30	5.0	0.1	7.0
MM5ZB11	HN	10.78	11	11.22	5.0	30	5.0	0.1	8.0
MM5ZB12	HP	11.76	12	12.24	5.0	35	5.0	0.1	9.0
MM5ZB13	HR	12.74	13	13.26	5.0	35	5.0	0.1	10
MM5ZB15	HX	14.70	15	15.30	5.0	40	5.0	0.1	11
MM5ZB16	HY	15.68	16	16.32	5.0	40	5.0	0.1	12
MM5ZB18	HZ	17.64	18	18.36	5.0	45	5.0	0.1	13
MM5ZB20	JA	19.60	20	20.40	5.0	50	5.0	0.1	15
MM5ZB22	JB	21.56	22	22.44	5.0	55	5.0	0.1	17
MM5ZB24	JC	23.52	24	24.48	5.0	60	5.0	0.1	19
MM5ZB27	JD	26.46	27	27.54	5.0	70	2.0	0.1	21
MM5ZB30	JE	29.40	30	30.60	5.0	80	2.0	0.1	23
MM5ZB33	JF	32.34	33	33.66	5.0	80	2.0	0.1	25
MM5ZB36	JH	35.28	36	36.72	5.0	90	2.0	0.1	27
MM5ZB39	JJ	38.22	39	39.78	2.5	100	2.0	2.0	30
MM5ZB43	JK	42.14	43	43.86	2.5	130	2.0	2.0	33
MM5ZB47	JM	46.06	47	47.94	2.5	150	2.0	2.0	36
MM5ZB51	YA	49.98	51	52.02	2.5	180	2.0	1.0	39
MM5ZB56	YB	54.88	56	57.12	2.5	180	2.0	1.0	43
MM5ZB62	YC	60.76	62	63.24	2.5	200	2.0	0.2	47
MM5ZB68	YD	66.64	68	69.36	2.5	250	2.0	0.2	52
MM5ZB75	YE	73.50	75	76.50	2.5	300	2.0	0.2	57



Note :

(1) Tested with pulses tp = 20 ms.

Zener Diodes 0.25 W

Type No.	Suffix (1)	Zener Voltage Vz (V) min.	Zener Voltage Vz (V) max.	Test Current I_{ZT} (mA)	Maximum Dymamic Resistance rd (Ω)	Maximum Dymamic Resistance @ I_Z (mA)	Maximum Reverse Current I_R (μA)	Maximum Reverse Current @ V_R (V)	Typical Temperature Coefficient * γ_Z(mV/ °C)	Typical Temperature Coefficient * @ I_Z (mA)
HZK-LL Series, 0.25 W, Case Type : MiniMELF										
HZK2LL	**A**	1.6	2.0	0.5	350	0.5	0.5	0.5	1.2	50
	B	1.9	2.3							
	C	2.2	2.6							
HZK3LL	**A**	2.5	2.9	0.5	360	0.5	0.5	1.0	1.2	50
	B	2.8	3.2							
	C	3.1	3.5							
HZK4LL	**A**	3.4	3.8	0.5	370	0.5	0.5	2.0	1.5	50
	B	3.7	4.1							
	C	4.0	4.4							
HZK5LL	**A**	4.3	4.7	0.5	380	0.5	0.5	3.0	1.5	50
	B	4.6	5.0							
	C	4.9	5.3							

* $\Delta V_{Z1} = V_Z$ (I_Z = 0.5 mA) - V_{Z1} (I_Z = 0.05 mA)

$\Delta V_{Z2} = V_{Z1}$ (I_Z = 0.05 mA) - V_{Z2} (I_Z = 0.001 mA)

Note:

(1) When placing an order for an HZK-LL type, enter "A", "B" or "C" suffix e.g. HZK2ALL, HZK2BLL ... HZK5CLL

Zener Diodes 0.25 W

Type No.	Grade	Zener Voltage V_Z @ I_{ZT}						Test Current	Maximum Dynamic Resistance		Maximum Reverse Current	
		Suffix -1		Suffix -2		Suffix -3						
		min.	max.	min.	max.	min.	max.	I_{ZT}	rd @	I_Z	I_R @	V_R
		(V)	(V)	(V)	(V)	(V)	(V)	(mA)	(W)	(mA)	(μA)	(V)

HZS Series, 0.25 W, Case Type : DO-34



HZS2	**A**	1.6	1.8	1.7	1.9	1.8	2.0	5	100	5	25	0.5
	B	1.9	2.1	2.0	2.2	2.1	2.3	5	100	5	2	0.5
	C	2.2	2.4	2.3	2.5	2.4	2.6	5	100	5	1	0.5
HZS3	**A**	2.5	2.7	2.6	2.8	2.7	2.9	5	100	5	1	0.5
	B	2.8	3.0	2.9	3.1	3.0	3.2	5	100	5	1	0.5
	C	3.1	3.3	3.2	3.4	3.3	3.5	5	100	5	1	0.5
HZS4	**A**	3.4	3.6	3.5	3.7	3.6	3.8	5	100	5	5	1.00
	B	3.7	3.9	3.8	4.0	3.9	4.1	5	100	5	5	1.00
	C	4.0	4.2	4.1	4.3	4.2	4.4	5	100	5	5	1.00
HZS5	**A**	4.3	4.5	4.4	4.6	4.5	4.7	5	100	5	5	1.5
	B	4.6	4.8	4.7	4.9	4.8	5.0	5	100	5	5	1.5
	C	4.9	5.1	5.0	5.2	5.1	5.3	5	100	5	5	1.5
HZS6	**A**	5.2	5.5	5.3	5.6	5.4	5.7	5	35	5	5	2.0
	B	5.5	5.8	5.6	5.9	5.7	6.0	5	35	5	5	2.0
	C	5.8	6.1	6.0	6.3	6.1	6.4	5	35	5	5	2.0
HZS7	**A**	6.3	6.6	6.4	6.7	6.6	6.9	5	15	5	1	3.5
	B	6.7	7.0	6.9	7.2	7.0	7.3	5	15	5	1	3.5
	C	7.2	7.6	7.3	7.7	7.5	7.9	5	15	5	1	3.5
HZS9	**A**	7.7	8.1	7.9	8.3	8.1	8.5	5	20	5	1	5.0
	B	8.3	8.7	8.5	8.9	8.7	9.1	5	20	5	1	5.0
	C	8.9	9.3	9.1	9.5	9.3	9.7	5	20	5	1	5.0
HZS11	**A**	9.5	9.9	9.7	10.1	9.9	10.3	5	25	5	1	7.5
	B	10.2	10.6	10.4	10.8	10.7	11.1	5	25	5	1	7.5
	C	10.9	11.3	11.1	11.6	11.4	11.9	5	25	5	1	7.5
HZS12	**A**	11.6	12.1	11.9	12.4	12.2	12.7	5	35	5	1	9.5
	B	12.4	12.9	12.6	13.1	12.9	13.4	5	35	5	1	9.5
	C	13.2	13.7	13.5	14.0	13.8	14.3	5	35	5	1	9.5
HZS15		14.1	14.7	14.5	15.1	14.9	15.5	5	40	5	1	11
HZS16		15.3	15.9	15.7	16.5	16.3	17.1	5	45	5	1	12
HZS18		16.9	17.7	17.5	18.3	18.1	19.0	5	55	5	1	13
HZS20		18.8	19.7	19.5	20.4	20.2	21.1	2	60	2	1	15
HZS22		20.9	21.9	21.6	22.6	22.3	23.3	2	65	2	1	17
HZS24		22.9	24.0	23.6	24.7	24.3	25.5	2	70	2	1	19
HZS27		25.2	26.6	26.2	27.6	27.2	28.6	2	80	2	1	21
HZS30		28.2	29.6	29.2	30.6	30.2	31.6	2	100	2	1	23
HZS33		31.2	32.6	32.2	33.6	33.2	34.6	2	120	2	1	25
HZS36		34.2	35.7	35.3	36.8	36.4	38.0	2	140	2	1	27

Note :

The lower voltage types (HZS2 - HZS12) are available in 3 grades, "A" to "C", each with suffix "-1", "-2" or "-3"

For example the type with Vz = 8.5 - 8.9V is HZS9B-2

The higher voltage types are only available with suffix "-1", "-2" or "-3" (no grade) e.g. HZS30-3

Zener Diodes 0.25 W

Type No.	Suffix (1)	Zener Voltage Vz (V) min.	Zener Voltage Vz (V) max.	Test Current I_{ZT} (mA)	Maximum Dymamic Resistance rd (Ω)	Maximum Dymamic Resistance @ I_Z (mA)	Maximum Reverse Current I_R (μA)	Maximum Reverse Current @ V_R (V)	Typical Temperature Coefficient * γ_Z(mV/ °C)	Typical Temperature Coefficient * I_Z (mA)
HZS-LL Series, 0.25 W, Case Type : DO-34										
HZS2LL	**A**	1.6	2.0	0.5	100	0.5	350	0.5	1.2	50
	B	1.9	2.3							
	C	2.2	2.6							
HZS3LL	**A**	2.5	2.9	0.5	100	1.0	360	0.5	1.2	50
	B	2.8	3.2							
	C	3.1	3.5							
HZS4LL	**A**	3.4	3.8	0.5	100	2.0	370	0.5	1.5	50
	B	3.7	4.1							
	C	4.0	4.4							
HZS5LL	**A**	4.3	4.7	0.5	100	3.0	380	0.5	1.5	50
	B	4.6	5.0							
	C	4.9	5.3							



* $\Delta V_{Z1} = V_Z (I_Z = 0.5\ mA) - V_{Z1} (I_Z = 0.05\ mA)$

$\Delta V_{Z1} = V_{Z1} (I_Z = 0.5\ mA) - V_{Z2} (I_Z = 0.05\ mA)$

Note:

(1) When placing an order for HZS-LL type, enter suffix "A", "B" or "C" e.g. HZS2ALL, HZS2BLL …. HZS5CLL

Zener Diodes 0.30 W

The plastic material carries U/L recognition 94V-0.

Type No.	Marking	Zener Voltage (1)			Test Current	Zener Impedance(2)	Test Current	Leakage Current		Temp. coefficient of Zener Voltage	
		V_Z @ I_{ZT} (V)			I_{ZT}	Z_Z @ I_Z	I_Z	I_R @ V_R		TKvz (%/K)	
		Min.	Nom.	Max.	(mA)	(Ω)	(mA)	(μA)	(V)	Min.	Max.
MM3Z2V0 Series, 0.3 W, Case Type : SOD-323											
MM3Z2V0	B0	1.80	2.0	2.15	5.0	100	5.0	120	0.5	-0.09	-0.06
MM3Z2V2	C0	2.08	2.2	2.33	5.0	100	5.0	120	0.7	-0.09	-0.06
MM3Z2V4	1C	2.28	2.4	2.56	5.0	100	5.0	120	1.0	-0.09	-0.06
MM3Z2V7	1D	2.5	2.7	2.9	5.0	110	5.0	120	1.0	-0.09	-0.06
MM3Z3V0	1E	2.8	3.0	3.2	5.0	120	5.0	50	1.0	-0.08	-0.05
MM3Z3V3	1F	3.1	3.3	3.5	5.0	130	5.0	20	1.0	-0.08	-0.05
MM3Z3V6	1H	3.4	3.6	3.8	5.0	130	5.0	10	1.0	-0.08	-0.05
MM3Z3V9	1J	3.7	3.9	4.1	5.0	130	5.0	5.0	1.0	-0.08	-0.05
MM3Z4V3	1K	4.0	4.3	4.6	5.0	130	5.0	5.0	1.0	-0.06	-0.03
MM3Z4V7	1M	4.4	4.7	5.0	5.0	130	5.0	2.0	1.0	-0.05	+0.02
MM3Z5V1	1N	4.8	5.1	5.4	5.0	130	5.0	2.0	1.5	-0.02	+0.02
MM3Z5V6	1P	5.2	5.6	6.0	5.0	80	5.0	1.0	2.5	-0.05	+0.05
MM3Z6V2	1R	5.8	6.2	6.6	5.0	50	5.0	1.0	3.0	0.03	0.06
MM3Z6V8	1X	6.4	6.8	7.2	5.0	30	5.0	0.5	3.5	0.03	0.07
MM3Z7V5	1Y	7.0	7.5	7.9	5.0	30	5.0	0.5	4.0	0.03	0.07
MM3Z8V2	1Z	7.7	8.2	8.7	5.0	30	5.0	0.5	5.0	0.03	0.08
MM3Z9V1	2A	8.5	9.1	9.6	5.0	30	5.0	0.5	6.0	0.03	0.09
MM3Z10	2B	9.4	10	10.6	5.0	30	5.0	0.1	7.0	0.03	0.10
MM3Z11	2C	10.4	11	11.6	5.0	30	5.0	0.1	8.0	0.03	0.11
MM3Z12	2D	11.4	12	12.7	5.0	35	5.0	0.1	9.0	0.03	0.11
MM3Z13	2E	12.4	13	14.1	5.0	35	5.0	0.1	10	0.03	0.11
MM3Z15	2F	13.8	15	15.8	5.0	40	5.0	0.1	11	0.03	0.11
MM3Z16	2H	15.3	16	17.1	5.0	40	5.0	0.1	12	0.03	0.11
MM3Z18	2J	16.8	18	19.1	5.0	45	5.0	0.1	13	0.03	0.11
MM3Z20	2K	18.8	20	21.2	5.0	50	5.0	0.1	15	0.03	0.11
MM3Z22	2M	20.8	22	23.3	5.0	55	5.0	0.1	17	0.04	0.12
MM3Z24	2N	22.8	24	25.6	5.0	60	2.0	0.1	19	0.04	0.12
MM3Z27	2P	25.1	27	28.9	5.0	70	2.0	0.1	21	0.04	0.12
MM3Z30	2R	28	30	32	5.0	80	2.0	0.1	23	0.04	0.12
MM3Z33	2X	31	33	35	5.0	80	2.0	0.1	25	0.04	0.12
MM3Z36	2Y	34	36	38	5.0	90	2.0	0.1	27	0.04	0.12
MM3Z39	2Z	37	39	41	2.5	100	2.0	2.0	30	0.04	0.12
MM3Z43	3A	40	43	46	2.5	130	2.0	2.0	33	0.04	0.12
MM3Z47	3B	44	47	50	2.5	150	2.0	2.0	36	0.04	0.12
MM3Z51	3C	48	51	54	2.5	180	2.0	1.0	39	0.04	0.12
MM3Z56	3D	52	56	60	2.5	180	2.0	1.0	43	0.04	0.12
MM3Z62	3E	58	62	66	2.5	200	2.0	0.2	47	0.04	0.12
MM3Z68	3F	64	68	72	2.5	250	2.0	0.2	52	0.04	0.12
MM3Z75	3H	70	75	79	2.5	300	2.0	0.2	57	0.04	0.12
MM3Z82	3J	77	82	87	2.5	300	2.0	0.2	63	0.05	0.12
MM3Z91	3K	85	91	96	1.0	700	1.0	0.2	69	0.05	0.12
MM3Z100	3M	94	100	106	1.0	700	1.0	0.2	76	0.05	0.12
MM3Z110	3N	104	110	116	1.0	800	1.0	0.2	84	0.05	0.12
MM3Z120	3P	114	120	127	1.0	900	1.0	0.2	91	0.05	0.12

Note :

(1) Vz is tested with pulses (20 ms).

Zener Diodes 0.30 W

The plastic material carries U/L recognition 94V-0.

Type No.	Marking	Zener Voltage (1) V_Z @ I_{ZT} (V)			Test Current I_{ZT}	Dynamic Impedance (2) Z_Z @ I_Z	Test Current I_Z	Reverse Leakage Current I_R @ V_R		Temp. coefficient of Zener Voltage TK_{VZ} (%/K)	
		Min.	Nom.	Max.	(mA)	(Ω)	(mA)	(μA)	(V)	Min.	Max.
MM3Z2V2B Series, 0.3 W, Case Type : SOD-323											
MM3Z2V2B	MF	2.08	2.2	2.33	5	100	5	120	0.7	-0.09	-0.06
MM3Z2V4B	7C	2.30	2.4	2.65	5	100	5	120	1.0	-0.09	-0.06
MM3Z2V7B	7D	2.65	2.7	2.95	5	110	5	120	1.0	-0.09	-0.06
MM3Z3V0B	7E	2.95	3.0	3.25	5	120	5	50	1.0	-0.08	-0.05
MM3Z3V3B	7F	3.25	3.3	3.55	5	120	5	20	1.0	-0.08	-0.05
MM3Z3V6B	7H	3.60	3.6	3.845	5	100	5	10	1.0	-0.08	-0.05
MM3Z3V9B	7J	3.89	3.9	4.16	5	100	5	5	1.0	-0.08	-0.05
MM3Z4V3B	7K	4.17	4.3	4.43	5	100	5	5	1.0	-0.06	-0.03
MM3Z4V7B	7M	4.55	4.7	4.75	5	100	5	2	1.0	-0.05	+0.02
MM3Z5V1B	7N	4.98	5.1	5.20	5	80	5	2	1.5	-0.02	+0.02
MM3Z5V6B	7P	5.49	5.6	5.73	5	60	5	1	2.5	-0.05	+0.05
MM3Z6V2B	7R	6.06	6.2	6.33	5	60	5	1	3.0	0.03	0.06
MM3Z6V8B	7X	6.65	6.8	6.93	5	40	5	0.5	3.5	0.03	0.07
MM3Z7V5B	7Y	7.28	7.5	7.60	5	30	5	0.5	4.0	0.03	0.07
MM3Z8V2B	7Z	8.02	8.2	8.36	5	30	5	0.5	5.0	0.03	0.08
MM3Z9V1B	8A	8.85	9.1	9.23	5	30	5	0.5	6.0	0.03	0.09
MM3Z10B	8B	9.77	10	10.21	5	30	5	0.1	7.0	0.03	0.10
MM3Z11B	8C	10.76	11	11.22	5	30	5	0.1	8.0	0.03	0.11
MM3Z12B	8D	11.74	12	12.24	5	30	5	0.1	9.0	0.03	0.11
MM3Z13B	8E	12.91	13	13.49	5	37	5	0.1	10	0.03	0.11
MM3Z15B	8F	14.34	15	14.98	5	42	5	0.1	11	0.03	0.11
MM3Z16B	8H	15.85	16	16.51	5	50	5	0.1	12	0.03	0.11
MM3Z18B	8J	17.56	18	18.35	5	65	5	0.1	13	0.03	0.11
MM3Z20B	8K	19.52	20	20.39	5	85	5	0.1	15	0.03	0.11
MM3Z22B	8M	21.54	22	22.47	5	100	5	0.1	17	0.04	0.12
MM3Z24B	8N	23.72	24	24.78	5	120	5	0.1	19	0.04	0.12
MM3Z27B	8P	26.19	27	27.53	5	150	2	0.1	21	0.04	0.12
MM3Z30B	8R	29.19	30	30.69	5	200	2	0.1	23	0.04	0.12
MM3Z33B	8X	32.15	33	33.79	5	250	2	0.1	25	0.04	0.12
MM3Z36B	8Y	35.07	36	36.87	5	300	2	0.1	27	0.04	0.12
MM3Z39B	8Z	37.00	39	41.00	5	100	2	2.0	30	0.04	0.12



Notes :

(1) V_Z is tested with pulses (20 ms).

(2) Z_Z is measured at I_Z by given a very small A.C. current signal.

Zener Diodes 0.30 W

The plastic material carries U/L recognition 94V-0.

Type No.	Marking	V_{Z1} @ I_{ZT1} = 5 mA (Note 1) (V)			Z_{ZT1} @ I_{ZT1} = 5 mA (Ω)	V_{Z2} @ I_{ZT2} = 1 mA (Note 1) (V)		Z_{ZT2} @ I_{ZT2} = 1 mA (Ω)	V_{Z3} @ I_{ZT1} = 20 mA (Note 1) (V)		Z_{ZT3} @ I_{ZT3} = 20 mA (Ω)	Max. Reverse Leakage Current I_R @ V_R		Θ_{VZ} (mV/k) @ I_{ZT1} = 5 mA		C (pF) @ V_R =0 f = 1 MHz
		Min	Nom	Max		Min	Max		Min	Max		(μA)	(V)	Min	Max	
BZX84Cxx Series, 0.30 W, Case Type : SOT-23																
BZX84C2V4	C8	2.2	2.4	2.6	100	1.7	2.1	600	2.6	3.2	50	50	1.0	-3.5	0	450
BZX84C2V7	D8	2.5	2.7	2.9	100	1.9	2.4	600	3.0	3.6	50	20	1.0	-3.5	0	450
BZX84C3V0	E8	2.8	3.0	3.2	95	2.1	2.7	600	3.3	3.9	50	10	1.0	-3.5	0	450
BZX84C3V3	F8	3.1	3.3	3.5	95	2.3	2.9	600	3.6	4.2	40	5	1.0	-3.5	0	450
BZX84C3V6	H8	3.4	3.6	3.8	90	2.7	3.3	600	3.9	4.5	40	5	1.0	-3.5	0	450
BZX84C3V9	J8	3.7	3.9	4.1	90	2.9	3.5	600	4.1	4.7	30	3	1.0	-3.5	-2.5	450
BZX84C4V3	K8	4.0	4.3	4.6	90	3.3	4.0	600	4.4	5.1	30	3	1.0	-3.5	0	450
BZX84C4V7	M8	4.4	4.7	5.0	80	3.7	4.7	500	4.5	5.4	15	3	2.0	-3.5	0.2	260
BZX84C5V1	N8	4.8	5.1	5.4	60	4.2	5.3	480	5.0	5.9	15	2	2.0	-2.7	1.2	225
BZX84C5V6	P8	5.2	5.6	6.0	40	4.8	6.0	400	5.2	6.3	10	1	2.0	-2.0	2.5	200
BZX84C6V2	R8	5.8	6.2	6.6	10	5.6	6.6	150	5.8	6.8	6	3	4.0	0.4	3.7	185
BZX84C6V8	X8	6.4	6.8	7.2	15	6.3	7.2	80	6.4	7.4	6	2	4.0	1.2	4.5	155
BZX84C7V5	Y8	7.0	7.5	7.9	15	6.9	7.9	80	7.0	8.0	6	1	5.0	2.5	5.3	140
BZX84C8V2	Z8	7.7	8.2	8.7	15	7.6	8.7	80	7.7	8.8	6	0.7	5.0	3.2	6.2	135
BZX84C9V1	A9	8.5	9.1	9.6	15	8.4	9.6	100	8.5	9.7	8	0.5	6.0	3.8	7.0	130
BZX84C10	B9	9.4	10	10.6	20	9.3	10.6	150	9.4	10.7	10	0.2	7.0	4.5	8.0	130
BZX84C11	C9	10.4	11	11.6	20	10.2	11.6	150	10.4	11.8	10	0.1	8.0	5.4	9.0	130
BZX84C12	D9	11.4	12	12.7	25	11.2	12.7	150	11.4	12.9	10	0.1	8.0	6.0	10.0	130
BZX84C13	E9	12.4	13	14.1	30	12.3	14.0	170	12.5	14.2	15	0.1	8.0	7.0	11.0	120
BZX84C15	F9	13.8	15	15.6	30	13.7	15.5	200	13.9	15.7	20	0.05	10.5	9.2	13.0	110
BZX84C16	H9	15.3	16	17.1	40	15.2	17.0	200	15.4	17.2	20	0.05	11.2	10.4	14.0	105
BZX84C18	J9	16.8	18	19.1	45	16.7	19.0	225	16.9	19.2	20	0.05	12.6	12.4	16.0	100
BZX84C20	K9	18.8	20	21.2	55	18.7	21.1	225	18.9	21.4	20	0.05	14.0	14.4	18.0	85
BZX84C22	M9	20.8	22	23.3	55	20.7	23.2	250	20.9	23.4	25	0.05	15.4	16.4	20.0	85
BZX84C24	N9	22.8	24	25.6	70	22.7	25.5	250	22.9	25.7	25	0.05	16.8	18.4	22.0	80
TYPE NO.	Marking	V_{Z1} Below @ I_{ZT1} = 2 mA (Note 1) (V)			Z_{ZT1} Below @ I_{ZT1} = 2 mA (Ω)	V_{Z2} Below @ I_{ZT2} =0.1mA (Note 1) (V)		Z_{ZT2} Below @ I_{ZT4} = 0.5mA (Ω)	V_{Z3} Below @ I_{ZT1} = 10 mA (Note 1) (V)		Z_{ZT3} Below @ I_{ZT3} = 10 mA (Ω)	Max. Reverse Leakage Current I_R @ V_R		Θ_{VZ} (mV/k) Below @ I_{ZT1} = 2 mA		C (pF) @ V_R =0 f = 1 MHz
		Min	Nom	Max		Min	Max		Min	Max		(μA)	(V)	Min	Max	
BZX84C27	P9	25.1	27	28.9	80	25	28.9	300	25.2	29.3	45	0.05	18.9	21.4	25.3	70
BZX84C30	R9	28	30	32	80	27.8	32	300	28.1	32.4	50	0.05	21.0	24.4	29.4	70
BZX84C33	X9	31	33	35	80	30.8	35	325	31.1	35.4	55	0.05	23.1	27.4	33.4	70
BZX84C36	Y9	34	36	38	90	33.8	38	350	34.1	38.4	60	0.05	25.2	30.4	37.4	70
BZX84C39	Z9	37	39	41	130	36.7	41	35	37.1	41.5	70	0.05	27.3	33.4	41.2	45
BZX84C43	A0	40	43	46	150	39.7	46	375	40.1	46.5	80	0.05	30.1	37.6	46.6	40
BZX84C47	B0	44	47	50	170	43.7	50	375	44.1	50.5	90	0.05	32.9	42.0	51.8	40
BZX84C51	C0	48	51	54	180	47.6	54	400	48.1	54.6	100	0.05	35.7	46.6	57.2	40
BZX84C56	D0	52	56	60	200	51.5	60	425	52.1	60.8	110	0.05	39.2	52.2	63.8	40
BZX84C62	E0	58	62	66	215	57.4	66	450	58.2	67.0	120	0.05	43.4	58.8	71.6	35
BZX84C68	F0	64	68	72	240	63.4	72	475	64.2	73.2	130	0.05	47.6	65.6	79.8	35
BZX84C75	H0	70	75	79	255	69.4	79	500	70.3	80.2	140	0.05	52.5	73.4	88.6	35

Note: (1) Zener voltage is measured with pulse test current IZ at an ambient temperature of 25 °C

Zener Diodes 0.35 W

The plastic material carries U/L recognition 94V-0.

TYPE NO.	Marking	V_{Z1} @ I_{ZT1} = 5 mA (Note 1) (V)			Z_{ZT1} @ I_{ZT1} = 5 mA (Ω)	V_{Z2} @ I_{ZT2} = 1 mA (Note 1) (V)		Z_{ZT2} @ I_{ZT2} = 1 mA[2] (Ω)	V_{Z3} @ I_{ZT1} = 20 mA (Note 1) (V)		Z_{ZT3} @ I_{ZT3} = 20 mA (Ω)	Max. Reverse Leakage Current I_R @ V_R		Θ_{VZ} (mV/k) @ I_{ZT1} = 5 mA		C (pF) @ V_R =0 f = 1 MHz
		Min	Nom	Max		Min	Max		Min	Max		(μA)	(V)	Min	Max	
BZX84Bxx Series, 0.35 W, Case Type : SOT-23																
BZX84B2V4	CR	2.35	2.4	2.45	100	1.7	2.1	600	2.6	3.2	50	50	1.0	-3.5	0	450
BZX84B2V7	CX	2.64	2.7	2.76	100	1.9	2.4	600	3.0	3.6	50	20	1.0	-3.5	0	450
BZX84B3V0	CY	2.94	3.0	3.06	95	2.1	2.7	600	3.3	3.9	50	10	1.0	-3.5	0	450
BZX84B3V3	CZ	3.23	3.3	3.37	95	2.3	2.9	600	3.6	4.2	40	5	1.0	-3.5	0	450
BZX84B3V6	DA	3.52	3.6	3.68	90	2.7	3.3	600	3.9	4.5	40	5	1.0	-3.5	0	450
BZX84B3V9	DB	3.82	3.9	3.98	90	2.9	3.5	600	4.1	4.7	30	3	1.0	-3.5	-2.5	450
BZX84B4V3	DC	4.21	4.3	4.39	90	3.3	4.0	600	4.4	5.1	30	3	1.0	-3.5	0	450
BZX84B4V7	DD	4.60	4.7	4.8	80	3.7	4.7	500	4.5	5.4	15	3	2.0	-3.5	0.2	260
BZX84B5V1	DE	4.99	5.1	5.2	60	4.2	5.3	480	5.0	5.9	15	2	2.0	-2.7	1.2	225
BZX84B5V6	DF	5.49	5.6	5.71	40	4.8	6.0	400	5.2	6.3	10	1	2.0	-2.0	2.5	200
BZX84B6V2	DH	6.07	6.2	6.32	10	5.6	6.6	150	5.8	6.8	6	3	4.0	0.4	3.7	185
BZX84B6V8	DJ	6.66	6.8	6.94	15	6.3	7.2	80	6.4	7.4	6	2	4.0	1.2	4.5	155
BZX84B7V5	DK	7.35	7.5	7.65	15	6.9	7.9	80	7.0	8.0	6	1	5.0	2.5	5.3	140
BZX84B8V2	DM	8.04	8.2	8.36	15	7.6	8.7	80	7.7	8.8	6	0.7	5.0	3.2	6.2	135
BZX84B9V1	DN	8.92	9.1	9.28	15	8.4	9.6	100	8.5	9.7	8	0.5	6.0	3.8	7.0	130
BZX84B10	DP	9.80	10	10.2	20	9.3	10.6	150	9.4	10.7	10	0.2	7.0	4.5	8.0	130
BZX84B11	DR	10.8	11	11.2	20	10.2	11.6	150	10.4	11.8	10	0.1	8.0	5.4	9.0	130
BZX84B12	DX	11.8	12	12.2	25	11.2	12.7	150	11.4	12.9	10	0.1	8.0	6.0	10.0	130
BZX84B13	DY	12.7	13	13.3	30	12.3	14.0	170	12.5	14.2	15	0.1	8.0	7.0	11.0	120
BZX84B15	DZ	14.7	15	15.3	30	13.7	15.5	200	13.9	15.7	20	0.05	10.5	9.2	13.0	110
BZX84B16	EA	15.7	16	16.3	40	15.2	17.0	200	15.4	17.2	20	0.05	11.2	10.4	14.0	105
BZX84B18	EB	17.6	18	18.4	45	16.7	19.0	225	16.9	19.2	20	0.05	12.6	12.4	16.0	100
BZX84B20	EC	19.6	20	20.4	55	18.7	21.1	225	18.9	21.4	20	0.05	14.0	14.4	18.0	85
BZX84B22	ED	21.6	22	22.5	55	20.7	23.2	250	20.9	23.4	25	0.05	15.4	16.4	20.0	85
BZX84B24	EE	23.5	24	24.5	70	22.7	25.5	250	22.9	25.7	25	0.05	16.8	18.4	22.0	80
TYPE NO.	Marking	V_{Z1} Below @ I_{ZT1} = 2 mA (Note 1) (V)			Z_{ZT1} Below @ I_{ZT1} = 2 mA (Ω)	V_{Z2} Below @ I_{ZT2} =0.1mA (Note 1) (V)		Z_{ZT2} Below @ I_{ZT4} = 0.5mA (Ω)	V_{Z3} Below @ I_{ZT1} = 10 mA (Note 1) (V)		Z_{ZT3} Below @ I_{ZT3} = 10 mA (Ω)	Max. Reverse Leakage Current I_R @ V_R		Θ_{VZ} (mV/k) Below @ I_{ZT1} = 2 mA		C (pF) @ V_R =0 f = 1 MHz
		Min	Nom	Max		Min	Max		Min	Max		(μA)	(V)	Min	Max	
BZX84B27	EF	26.4	27	27.6	80	25	28.9	300	25.2	29.3	45	0.05	18.9	21.4	25.3	70
BZX84B30	EH	29.4	30	30.6	80	27.8	32	300	28.1	32.4	50	0.05	21.0	24.4	29.4	70
BZX84B33	EJ	32.3	33	33.7	80	30.8	35	325	31.1	35.4	55	0.05	23.1	27.4	33.4	70
BZX84B36	EK	35.2	36	36.8	90	33.8	38	350	34.1	38.4	60	0.05	25.2	30.4	37.4	70
BZX84B39	EM	38.2	39	39.8	130	36.7	41	35	37.1	41.5	70	0.05	27.3	33.4	41.2	45
BZX84B43	EN	42.1	43	43.9	150	39.7	46	375	40.1	46.5	80	0.05	30.1	37.6	46.6	40
BZX84B47	EP	46.0	47	48	170	43.7	50	375	44.1	50.5	90	0.05	32.9	42.0	51.8	40

Notes :

(1) Tested with pulses tp = 20 ms.

(1) The Zener impedance , Z_{ZT2} for the 27 through 75 volt types is tested at 0.5 mA rather than the test current of 0.1mA used for V_{Z2}

Zener Diodes 0.35 W

The plastic material carries U/L recognition 94V-0.

Type No.	Marking Code	Zener Voltage (1)		Test Current	Max. Dynamic Resistance		Test Current	Maximum Reverse Voltage		Maximum Zener Current
		V_Z @ I_{ZT} (V)		I_{ZT}	Z_{ZT} @ I_{ZT}	Z_{ZK} @ I_{ZK}	I_{ZK}	I_R at V_R		I_{ZM}
		Min.	Max.	(mA)	(Ω)	(Ω)	(mA)	(μA)	(V)	(mA)
BZX84CxxCA Series, 0.35 W, Case Type : SOT-23										
BZX84C3V0CA	MR	2.8	3.2	5.0	100	600	1.0	4.0	1.0	109
BZX84C3V3CA	MX	3.1	3.5	5.0	95	600	1.0	2.0	1.0	100
BZX84C3V6CA	MY	3.4	3.8	5.0	95	600	1.0	2.0	1.0	92
BZX84C3V9CA	MZ	3.7	4.1	5.0	90	600	1.0	2.0	1.0	85
BZX84C4V3CA	NA	4.0	4.6	5.0	90	600	1.0	1.0	1.0	76
BZX84C4V7CA	NB	4.4	5.0	5.0	80	500	1.0	3.0	2.0	70
BZX84C5V1CA	NC	4.8	5.4	5.0	60	480	1.0	2.0	2.0	65
BZX84C5V6CA	ND	5.2	6.0	5.0	40	400	1.0	1.0	2.0	58
BZX84C6V2CA	NE	5.8	6.6	5.0	10	150	1.0	3.0	4.0	53
BZX84C6V8CA	NF	6.4	7.2	5.0	10	80	1.0	2.0	4.0	49
BZX84C7V5CA	NH	7.0	7.9	5.0	10	80	1.0	1.0	5.0	44
BZX84C8V2CA	NJ	7.7	8.7	5.0	10	80	1.0	0.7	5.0	40
BZX84C9V1CA	NK	8.5	9.6	5.0	15	100	1.0	0.5	6.0	36
BZX84C10CA	NM	9.4	10.6	5.0	20	150	1.0	0.2	7.0	33
BZX84C11CA	NN	10.4	11.6	5.0	20	150	1.0	0.1	8.0	30
BZX84C12CA	NP	11.4	12.7	5.0	25	150	1.0	0.1	8.0	28
BZX84C13CA	NX	12.4	14.1	5.0	30	170	1.0	0.1	8.0	25
BZX84C15CA	NY	13.8	15.6	5.0	30	200	1.0	0.05	10	22
BZX84C16CA	NZ	15.3	17.1	5.0	40	200	1.0	0.05	11	20
BZX84C18CA	PA	16.8	19.1	5.0	50	225	1.0	0.05	13	18
BZX84C20CA	PB	18.8	21.2	5.0	50	225	1.0	0.05	14	17
BZX84C22CA	PC	20.8	23.3	5.0	55	250	1.0	0.05	15	15
BZX84C24CA	PD	22.8	25.6	5.0	80	250	1.0	0.05	17	14
BZX84C27CA	PE	25.1	28.9	2.0	80	300	0.5	0.05	19	12
BZX84C30CA	PF	28	32	2.0	80	300	0.5	0.05	21	11
BZX84C33CA	PH	31	35	2.0	80	325	0.5	0.05	23	10
BZX84C36CA	PJ	34	38	2.0	90	350	0.5	0.05	25	9
BZX84C39CA	PM	37	41	2.0	90	350	0.5	0.05	27	9
BZX84C43CA	PN	40	46	2.0	100	375	0.5	0.05	30	8
BZX84C47CA	PP	44	50	2.0	100	375	0.5	0.05	33	7



Note : (1) Tested with pulses tp = 20 ms.

Zener Diodes 0.35 W

The plastic material carries U/L recognition 94V-0.

Type No.	Marking Code	Zener Voltage (1) V_Z @ I_{ZT} (V)			Test Current I_{ZT}	Max. Dynamic Resistance Z_{ZT} @ I_{ZT}	Maximum Reverse Voltage I_R at V_R	
		Min.	Nom.	Max.	(mA)	(Ω)	(μA)	(V)
BZX84CxxCC Series, 0.35 W, Case Type : SOT-23								
BZX84C2V4CC	JH	2.2	2.4	2.6	5.0	100	50	1.0
BZX84C2V7CC	JJ	2.5	2.7	2.9	5.0	100	20	1.0
BZX84C3V0CC	JK	2.8	3.0	3.2	5.0	95	10	1.0
BZX84C3V3CC	JM	3.1	3.3	3.5	5.0	95	5.0	1.0
BZX84C3V6CC	JN	3.4	3.6	3.8	5.0	90	5.0	1.0
BZX84C3V9CC	JP	3.7	3.9	4.1	5.0	90	3.0	1.0
BZX84C4V3CC	JR	4.0	4.3	4.6	5.0	90	3.0	1.0
BZX84C4V7CC	JX	4.4	4.7	5.0	5.0	80	3.0	2.0
BZX84C5V1CC	JY	4.8	5.1	5.4	5.0	60	2.0	2.0
BZX84C5V6CC	JZ	5.2	5.6	6.0	5.0	40	1.0	2.0
BZX84C6V2CC	KA	5.8	6.2	6.6	5.0	10	3.0	4.0
BZX84C6V8CC	KB	6.4	6.8	7.2	5.0	15	2.0	4.0
BZX84C7V5CC	KC	7.0	7.5	7.9	5.0	15	1.0	5.0
BZX84C8V2CC	KD	7.7	8.2	8.7	5.0	15	0.7	5.0
BZX84C9V1CC	KE	8.5	9.1	9.6	5.0	15	0.5	6.0
BZX84C10CC	KF	9.4	10	10.6	5.0	20	0.2	7.0
BZX84C11CC	KH	10.4	11	11.6	5.0	20	0.1	8.0
BZX84C12CC	KJ	11.4	12	12.7	5.0	25	0.1	8.0
BZX84C13CC	KK	12.4	13	14.1	5.0	30	0.1	8.0
BZX84C15CC	KM	13.8	15	15.6	5.0	30	0.05	10.5
BZX84C16CC	KN	15.3	16	17.1	5.0	40	0.05	11.2
BZX84C18CC	KP	16.8	18	19.1	5.0	45	0.05	12.6
BZX84C20CC	KR	18.8	20	21.2	5.0	55	0.05	14.0
BZX84C22CC	KX	20.8	22	23.3	5.0	55	0.05	15.4
BZX84C24CC	KY	22.8	24	25.6	5.0	70	0.05	16.8
BZX84C27CC	KZ	25.1	27	28.9	2.0	80	0.05	18.9
BZX84C30CC	MA	28	30	32	2.0	80	0.05	21.0
BZX84C33CC	MB	31	33	35	2.0	80	0.05	23.1
BZX84C36CC	MC	34	36	38	2.0	90	0.05	25.2
BZX84C39CC	MD	37	39	41	2.0	130	0.05	27.3
BZX84C43CC	ME	40	43	46	2.0	150	0.05	30.1
BZX84C47CC	MF	44	47	50	2.0	170	0.05	32.9
BZX84C51CC	MH	48	51	54	2.0	180	0.05	35.7
BZX84C56CC	MJ	52	56	60	2.0	200	0.05	39.2
BZX84C62CC	MK	58	62	66	2.0	215	0.05	43.4
BZX84C68CC	MM	64	68	72	2.0	240	0.05	47.6
BZX84C75CC	MN	70	75	79	2.0	255	0.05	52.5



Note : (1) Tested with pulses tp = 20 ms.

Zener Diodes 0.35 W

The plastic material carries U/L recognition 94V-0.

Type No.	Marking	Zener Voltage (1)			Test Current	Maximum Zener Impedance		Test Current	Maximum Reverse Leakage Current	
		V_Z @ I_{ZT} (V)			I_{ZT}	Z_{ZT} @ I_{ZT}	Z_{ZK} @ I_{ZK}	I_{ZK}	I_R @ V_R	
		Min.	Nom.	Max.	(mA)	(Ω)	(Ω)	(mA)	(μA)	(V)
MMBZ5221B Series, 0.35 W, Case Type : SOT-23										
MMBZ5221B	Y0	2.28	2.4	2.52	20	30	1200	0.25	100	1.0
MMBZ5223B	Z0	2.57	2.7	2.84	20	30	1300	0.25	75	1.0
MMBZ5225B	AA	2.85	3.0	3.15	20	29	1600	0.25	50	1.0
MMBZ5226B	AB	3.14	3.3	3.47	20	28	1600	0.25	25	1.0
MMBZ5227B	AC	3.42	3.6	3.78	20	24	1700	0.25	15	1.0
MMBZ5228B	AD	3.71	3.9	4.10	20	23	1900	0.25	10	1.0
MMBZ5229B	AE	4.09	4.3	4.52	20	22	2000	0.25	5	1.0
MMBZ5230B	AF	4.47	4.7	4.94	20	19	1900	0.25	5	2.0
MMBZ5231B	AH	4.85	5.1	5.36	20	17	1600	0.25	5	2.0
MMBZ5232B	AJ	5.32	5.6	5.88	20	11	1600	0.25	5	3.0
MMBZ5233B	AK	5.70	6.0	6.30	20	7	1600	0.25	5	3.5
MMBZ5234B	AM	5.89	6.2	6.51	20	7	1000	0.25	5	4.0
MMBZ5235B	AN	6.46	6.8	7.14	20	5	750	0.25	3	5.0
MMBZ5236B	AP	7.13	7.5	7.88	20	6	500	0.25	3	6.0
MMBZ5237B	AR	7.79	8.2	8.61	20	8	500	0.25	3	6.5
MMBZ5238B	AX	8.27	8.7	9.14	20	8	600	0.25	3	6.5
MMBZ5239B	AY	8.65	9.1	9.56	20	10	600	0.25	3	7.0
MMBZ5240B	AZ	9.50	10	10.50	20	17	600	0.25	3	8.0
MMBZ5241B	BA	10.45	11	11.50	20	22	600	0.25	2	8.4
MMBZ5242B	BB	11.40	12	12.60	20	30	600	0.25	1	9.1
MMBZ5243B	BC	12.35	13	13.65	9.5	13	600	0.25	0.5	9.9
MMBZ5245B	BE	14.25	15	15.75	8.5	16	600	0.25	0.1	11
MMBZ5246B	BF	15.20	16	16.80	7.8	17	600	0.25	0.1	12
MMBZ5247B	BH	16.15	17	17.85	7.4	19	600	0.25	0.1	13
MMBZ5248B	BJ	17.10	18	18.90	7.0	21	600	0.25	0.1	14
MMBZ5249B	BK	18.05	19	19.95	6.6	23	600	0.25	0.1	14
MMBZ5250B	BM	19.00	20	21.00	6.2	25	600	0.25	0.1	15
MMBZ5251B	BN	20.90	22	23.10	5.6	29	600	0.25	0.1	17
MMBZ5252B	BP	22.80	24	25.20	5.2	33	600	0.25	0.1	18
MMBZ5253B	BR	23.75	25	26.25	5.0	35	600	0.25	0.1	19
MMBZ5254B	BX	25.65	27	28.35	4.6	41	600	0.25	0.1	21
MMBZ5255B	BY	26.60	28	29.40	4.5	44	600	0.25	0.1	21
MMBZ5256B	BZ	28.50	30	31.50	4.2	49	600	0.25	0.1	23
MMBZ5257B	CA	31.35	33	34.65	3.8	58	700	0.25	0.1	25
MMBZ5258B	CB	34.20	36	37.80	3.4	70	700	0.25	0.1	27
MMBZ5259B	CC	37.05	39	40.95	3.2	80	800	0.25	0.1	30
MMBZ5260B	CD	40.85	43	45.15	3.0	93	900	0.25	0.1	33
MMBZ5261B	CE	44.65	47	49.35	2.7	105	1000	0.25	0.1	36



Note :

(1) Tested with pulses pulses tp = 20 ms

Zener Diodes 0.40 W

Type No.	Grade	Zener Voltage V_Z @ I_{ZT}						Test Current	Maximum Dynamic Resistance		Maximum Reverse Current	
		Suffix -1		Suffix -2		Suffix -3						
		min.	max.	min.	max.	min.	max.	I_{ZT}	rd @	I_Z	I_R @	V_R
		(V)	(V)	(V)	(V)	(V)	(V)	(mA)	(Ω)	(mA)	(μA)	(V)
HZ6L Series, 0.4 W, Case Type : DO-35												
HZ6L	**A**	5.2	5.5	5.3	5.6	5.4	5.7	0.5	150	0.5	1	2.0
	B	5.5	5.8	5.6	5.9	5.7	6.0	0.5	80	0.5	1	2.0
	C	5.8	6.1	6.0	6.3	6.1	6.4	0.5	60	0.5	1	2.0
HZ7L	**A**	6.3	6.6	6.4	6.7	6.6	6.9	0.5	60	0.5	1	3.5
	B	6.7	7.0	6.9	7.2	7.0	7.3	0.5	60	0.5	1	3.5
	C	7.2	7.6	7.3	7.7	7.5	7.9	0.5	60	0.5	1	3.5
HZ9L	**A**	7.7	8.1	7.9	8.3	8.1	8.5	0.5	60	0.5	1	6.0
	B	8.3	8.7	8.5	8.9	8.7	9.1	0.5	60	0.5	1	6.0
	C	8.9	9.3	9.1	9.5	9.3	9.7	0.5	60	0.5	1	6.0
HZ11L	**A**	9.5	9.9	9.7	10.1	9.9	10.3	0.5	80	0.5	1	8.0
	B	10.2	10.6	10.4	10.8	10.7	11.1	0.5	80	0.5	1	8.0
	C	10.9	11.3	11.1	11.6	11.4	11.9	0.5	80	0.5	1	8.0
HZ12L	**A**	11.6	12.1	11.9	12.4	12.2	12.7	0.5	80	0.5	1	10.5
	B	12.4	12.9	12.6	13.1	12.9	13.4	0.5	80	0.5	1	10.5
	C	13.2	13.7	13.5	14.0	13.8	14.3	0.5	80	0.5	1	10.5
HZ15L		14.1	14.7	14.5	15.1	14.9	15.5	0.5	80	0.5	1	13.0
HZ16L		15.3	15.9	15.7	16.5	16.3	17.1	0.5	80	0.5	1	14.0
HZ18L		16.9	17.7	17.5	18.3	18.1	19.0	0.5	80	0.5	1	15.0
HZ20L		18.8	19.7	19.5	20.4	20.2	21.1	0.5	100	0.5	1	18.0
HZ22L		20.9	21.9	21.6	22.6	22.3	23.3	0.5	100	0.5	1	20.0
HZ24L		22.9	24.0	23.6	24.7	24.3	25.5	0.5	120	0.5	1	22.0
HZ27L		25.2	26.6	26.2	27.6	27.2	28.6	0.5	150	0.5	1	24.0
HZ30L		28.2	29.6	29.2	30.6	30.2	31.6	0.5	200	0.5	1	27.0
HZ33L		31.2	32.6	32.2	33.6	33.2	34.6	0.5	250	0.5	1	30.0
HZ36L		34.2	35.7	35.3	36.8	36.4	38.0	0.5	300	0.5	1	33.0

Note :

The lower voltage types (HZ6L - HZ12L) are available in 3 grades, "A" to "C", each with suffix "-1", "-2" or "-3"
For example the type with Vz = 8.5 - 8.9V is HZ9B2L

The higher voltage types are only available with suffix "-1", "-2" or "-3" (no grade) e.g. HZ30-3L

Zener Diodes 0.40 W

Type No.	Suffix (1)	Zener Voltage Vz (V) min.	Zener Voltage Vz (V) max.	Test Current I_{ZT} (mA)	Maximum Dymamic Resistance rd (Ω)	Maximum Dymamic Resistance @ I_Z (mA)	Maximum Reverse Current I_R (μA)	Maximum Reverse Current @ V_R (V)	Typical Temperature Coefficient * γ_Z(mV/ °C)	Typical Temperature Coefficient * @ I_Z (mA)
HZK-L Series, 0.4 W, Case Type : Mini MELF										
HZK6L	**A1**	5.2	5.5	0.5	150	0.5	1	2.0	1.0	0.5
	A2	5.3	5.6							
	A3	5.4	5.7							
	B1	5.5	5.8		80					
	B2	5.6	5.9							
	B3	5.7	6.0							
	C1	5.8	6.1		60					
	C2	6.0	6.3							
	C3	6.1	6.4							
HZK7L	**A1**	6.3	6.6	0.5	60	0.5	1	3.5	2.0	0.5
	A2	6.4	6.7							
	A3	6.6	6.9							
	B1	6.7	7.0							
	B2	6.9	7.2							
	B3	7.0	7.3							
	C1	7.2	7.6							
	C2	7.3	7.7							
	C3	7.5	7.9							
HZK9L	**A1**	7.7	8.1	0.5	60	0.5	1	6.0	3.0	0.5
	A2	7.9	8.3							
	A3	8.1	8.5							
	B1	8.3	8.7							
	B2	8.5	8.9							
	B3	8.7	9.1							
	C1	8.9	9.3							
	C2	9.1	9.5							
	C3	9.3	9.7							
HZK11L	**A1**	9.5	9.9	0.5	80	0.5	1	8.0	5.0	0.5
	A2	9.7	10.1							
	A3	9.9	10.3							
	B1	10.2	10.6							
	B2	10.4	10.8							
	B3	10.7	11.1							
	C1	10.9	11.3							
	C2	11.1	11.6							
	C3	11.4	11.9							
HZK12L	**A1**	11.6	12.1	0.5	80	0.5	1	10.5	7.0	0.5
	A2	11.9	12.4							
	A3	12.2	12.7							
	B1	12.4	12.9							
	B2	12.6	13.1							
	B3	12.9	13.4							
	C1	13.2	13.7							
	C2	13.5	14.0							
	C3	13.8	14.3							



Note : (1) When placing an order for HZK-L type, enter suffix as follows: HZK6A1L, HZK6A2L….HZK36-3L

Zener Diodes 0.40 W

Type No.	Suffix (1)	Zener Voltage Vz (V) min.	Zener Voltage Vz (V) max.	Test Current I_{ZT} (mA)	Maximum Dymamic Resistance rd (Ω)	@ I_Z (mA)	Maximum Reverse Current I_R (μA)	@ V_R (V)	Typical Temperature Coefficient * γ_Z(mV/ °C)	I_Z (mA)
HZK15L	**1**	14.1	14.7	0.5	80	0.5	1	13.0	9.0	0.5
	2	14.5	15.1							
	3	14.9	15.5							
HZK16L	**1**	15.3	15.9	0.5	80	0.5	1	14.0	10.0	0.5
	2	15.7	16.5							
	3	16.3	17.1							
HZK18L	**1**	16.9	17.7	0.5	80	0.5	1	15.0	12.0	0.5
	2	17.5	18.3							
	3	18.1	19.0							
HZK20L	**1**	18.8	19.7	0.5	100	0.5	1	18.0	14.0	0.5
	2	19.5	20.4							
	3	20.2	21.1							
HZK22L	**1**	20.9	21.9	0.5	100	0.5	1	20.0	16.0	0.5
	2	21.6	22.6							
	3	22.3	23.3							
HZK24L	**1**	22.9	24.0	0.5	120	0.5	1	22.0	18.0	0.5
	2	23.6	24.7							
	3	24.3	25.5							
HZK27L	**1**	25.2	26.6	0.5	150	0.5	1	24.0	20.0	0.5
	2	26.2	27.6							
	3	27.2	28.6							
HZK30L	**1**	28.2	29.6	0.5	200	0.5	1	27.0	23.0	0.5
	2	29.2	30.6							
	3	30.2	31.6							
HZK33L	**1**	31.2	32.6	0.5	250	0.5	1	30.0	26.0	0.5
	2	32.2	33.6							
	3	33.2	34.6							
HZK36L	**1**	34.2	35.7	0.5	300	0.5	1	33.0	30.0	0.5
	2	35.3	36.8							
	3	36.4	38.0							

HZK-L Series, 0.4 W, Case Type : Mini MELF



Note:

(1) When placing an order for HZK-L type, enter suffix as follows: HZK6A1L, HZK6A2L….HZK36-3L

Zener Diodes 0.40 W

Type No.	Suffix (1)	Zener Voltage Vz (V) min.	Zener Voltage Vz (V) max.	Test Current I_{ZT} (mA)	Maximum Dymamic Resistance rd (Ω)	Maximum Dymamic Resistance @ I_Z (mA)	Maximum Reverse Current I_R (μA)	Maximum Reverse Current @ V_R (V)	Typical Temperature Coefficient * γ_Z(mV/ °C)	Typical Temperature Coefficient * I_Z (mA)
HZS-L Series, 0.4 W, Case Type : DO-34										
HZS6L	**A1**	5.2	5.5	0.5	150	0.5	1	2.0	2.0	0.5
	A2	5.3	5.6							
	A3	5.4	5.7							
	B1	5.5	5.8		80					
	B2	5.6	5.9							
	B3	5.7	6.0							
	C1	5.8	6.1		60					
	C2	6.0	6.3							
	C3	6.1	6.4							
HZS7L	**A1**	6.3	6.6	0.5	60	0.5	1	3.5	3.0	0.5
	A2	6.4	6.7							
	A3	6.6	6.9							
	B1	6.7	7.0							
	B2	6.9	7.2							
	B3	7.0	7.3							
	C1	7.2	7.6							
	C2	7.3	7.7							
	C3	7.5	7.9							
HZS9L	**A1**	7.7	8.1	0.5	60	0.5	1	6.0	7.0	0.5
	A2	7.9	8.3							
	A3	8.1	8.5							
	B1	8.3	8.7							
	B2	8.5	8.9							
	B3	8.7	9.1							
	C1	8.9	9.3							
	C2	9.1	9.5							
	C3	9.3	9.7							
HZS11L	**A1**	9.5	9.9	0.5	80	0.5	1	8.0	1.0	2.0
	A2	9.7	10.1							
	A3	9.9	10.3							
	B1	10.2	10.6							
	B2	10.4	10.8							
	B3	10.7	11.1							
	C1	10.9	11.3							
	C2	11.1	11.6							
	C3	11.4	11.9							
HZS12L	**A1**	11.6	12.1	0.5	80	0.5	1	10.5	10.0	0.5
	A2	11.9	12.4							
	A3	12.2	12.7							
	B1	12.4	12.9							
	B2	12.6	13.1							
	B3	12.9	13.4							
	C1	13.2	13.7							
	C2	13.5	14.0							
	C3	13.8	14.3							



Note: (1) When placing an order for HZS-L type, enter suffix as follows: HZS6A1, HZS6A2L ……HZS36-3L

Zener Diodes 0.40 W

Type No.	Suffix (1)	Zener Voltage Vz (V) min.	Zener Voltage Vz (V) max.	Test Current I_{ZT} (mA)	Maximum Dymamic Resistance rd (Ω)	Maximum Dymamic Resistance @ I_Z (mA)	Maximum Reverse Current I_R (μA)	Maximum Reverse Current @ V_R (V)	Typical Temperature Coefficient * γ_Z(mV/ °C)	Typical Temperature Coefficient * @ I_Z (mA)
HZS-L Series, 0.4 W, Case Type : DO-34										
HZS15L	**1**	14.1	14.7	0.5	80	0.5	1	13.0	12.0	0.5
	2	14.5	15.1							
	3	14.9	15.5							
HZS16L	**1**	15.3	15.9	0.5	80	0.5	1	14.0	13.0	0.5
	2	15.7	16.5							
	3	16.3	17.1							
HZS18L	**1**	16.9	17.7	0.5	80	0.5	1	15.0	16.0	0.5
	2	17.5	18.3							
	3	18.1	19.0							
HZS20L	**1**	18.8	19.7	0.5	100	0.5	1	18.0	18.0	0.5
	2	19.5	20.4							
	3	20.2	21.1							
HZS22L	**1**	20.9	21.9	0.5	100	0.5	1	20.0	20.0	0.5
	2	21.6	22.6							
	3	22.3	23.3							
HZS24L	**1**	22.9	24.0	0.5	120	0.5	1	22.0	23.0	0.5
	2	23.6	24.7							
	3	24.3	25.5							
HZS27L	**1**	25.2	26.6	0.5	150	0.5	1	24.0	26.0	0.5
	2	26.2	27.6							
	3	27.2	28.6							
HZS30L	**1**	28.2	29.6	0.5	200	0.5	1	27.0	29.0	0.5
	2	29.2	30.6							
	3	30.2	31.6							
HZS33L	**1**	31.2	32.6	0.5	250	0.5	1	30.0	32.0	0.5
	2	32.2	33.6							
	3	33.2	34.6							
HZS36L	**1**	34.2	35.7	0.5	300	0.5	1	33.0	36.0	0.5
	2	35.3	36.8							
	3	36.4	38.0							



Note:

(1) When placing an order for HZS-L type, enter suffix as follows: HZS6A1, HZS6A2L ……HZS36-3L

Zener Diodes 0.40 W

Type	Suffix [3]	Zener Voltage [1]		Test Current	Maximum Zener [2] Impedance			Maximum Reverse Current	
		V_Z (V) at I_{ZT}		I_{ZT}	Z_{ZT} @ I_{ZT}	Z_{ZK} @ I_{ZK}	I_{ZK}	I_R	at V_R
		min.	max.	(mA)	(Ω)	(Ω)	(mA)	(μA)	(V)
RD2.0ES Series, 0.4 W, Case Type : DO-34									
RD2.0ES	**AB**	1.88	2.20	5	100	1000	0.5	120	0.5
	AB1	1.88	2.10						
	AB2	2.02	2.20						
RD2.2ES	**AB**	2.12	2.41	5	100	1000	0.5	120	0.7
	AB1	2.12	2.30						
	AB2	2.22	2.41						
RD2.4ES	**AB**	2.33	2.63	5	100	1000	0.5	120	1.0
	AB1	2.33	2.52						
	AB2	2.43	2.63						
RD2.7ES	**AB**	2.54	2.91	5	110	1000	0.5	100	1.0
	AB1	2.54	2.75						
	AB2	2.69	2.91						
RD3.0ES	**AB**	2.85	3.22	5	120	1000	0.5	50	1.0
	AB1	2.85	3.07						
	AB2	3.01	3.22						
RD3.3ES	**AB**	3.16	3.53	5	120	1000	0.5	20	1.0
	AB1	3.16	3.38						
	AB2	3.32	3.53						
RD3.6ES	**AB**	3.47	3.83	5	120	1100	0.5	10	1.0
	AB1	3.47	3.68						
	AB2	3.62	3.83						
RD3.9ES	**AB**	3.77	4.14	5	120	1200	0.5	5	1.0
	AB1	3.77	3.98						
	AB2	3.92	4.14						
RD4.3ES	**AB**	4.05	4.53	5	120	1200	0.5	5	1.0
	AB1	4.05	4.26						
	AB2	4.20	4.40						
	AB3	4.34	4.53						
RD4.7ES	**AB**	4.47	4.91	5	100	1200	0.5	5	1.0
	AB1	4.47	4.65						
	AB2	4.59	4.77						
	AB3	4.71	4.91						
RD5.1ES	**AB**	4.85	5.35	5	70	1200	0.5	5	1.5
	AB1	4.85	5.03						
	AB2	4.97	5.18						
	AB3	5.12	5.35						
RD5.6ES	**AB**	5.29	5.88	5	40	900	0.5	5	2.5
	AB1	5.29	5.52						
	AB2	5.46	5.70						
	AB3	5.64	5.88						
RD6.2ES	**AB**	5.81	6.40	5	30	500	0.5	5	3.0
	AB1	5.81	6.06						
	AB2	5.99	6.24						
	AB3	6.16	6.40						



Zener Diodes 0.40 W

Type	Suffix (3)	Zener Voltage (1)		Test Current	Maximum Zener (2) Impedance			Maximum Reverse Current	
		V_Z (V) at I_{ZT}		I_{ZT}	Z_{ZT} @ I_{ZT}	Z_{ZK} @ I_{ZK}	I_{ZK}	I_R	at V_R
		min.	max.	(mA)	(Ω)	(Ω)	(mA)	(μA)	(V)
RD2.0ES Series, 0.4 W, Case Type : DO-34									
RD6.8ES	**AB**	6.32	6.97	5	25	150	0.5	2	3.5
	AB1	6.32	6.59						
	AB2	6.52	6.79						
	AB3	6.70	6.97						
RD7.5ES	**AB**	6.88	7.64	5	25	120	0.5	0.5	4.0
	AB1	6.88	7.19						
	AB2	7.11	7.41						
	AB3	7.33	7.64						
RD8.2ES	**AB**	7.56	8.41	5	20	120	0.5	0.5	5.0
	AB1	7.56	7.90						
	AB2	7.82	8.15						
	AB3	8.07	8.41						
RD9.1ES	**AB**	8.33	9.29	5	20	120	0.5	0.5	6.0
	AB1	8.33	8.70						
	AB2	8.61	8.99						
	AB3	8.89	9.29						
RD10ES	**AB**	9.19	10.30	5	20	120	0.5	0.2	7.0
	AB1	9.19	9.59						
	AB2	9.48	9.90						
	AB3	9.82	10.30						
RD11ES	**AB**	10.18	11.26	5	20	120	0.5	0.2	8.0
	AB1	10.18	10.63						
	AB2	10.50	10.95						
	AB3	10.82	11.26						
RD12ES	**AB**	11.13	12.30	5	25	110	0.5	0.2	9.0
	AB1	11.13	11.63						
	AB2	11.50	11.92						
	AB3	11.80	12.30						
RD13ES	**AB**	12.18	13.62	5	25	110	0.5	0.2	10
	AB1	12.18	12.71						
	AB2	12.59	13.16						
	AB3	13.03	13.62						
RD15ES	**AB**	13.48	15.02	5	25	110	0.5	0.2	11
	AB1	13.48	14.09						
	AB2	13.95	14.56						
	AB3	14.42	15.02						
RD16ES	**AB**	14.87	16.50	5	25	150	0.5	0.2	12
	AB1	14.87	15.50						
	AB2	15.33	15.96						
	AB3	15.79	16.50						
RD18ES	**AB**	16.34	18.30	5	30	150	0.5	0.2	13
	AB1	16.34	17.06						
	AB2	16.90	17.67						
	AB3	17.51	18.30						



Zener Diodes 0.40 W

Type	Suffix (3)	Zener Voltage (1)		Test Current	Maximum Zener (2) Impedance			Maximum Reverse Current	
		V_Z (V) at I_{ZT}		I_{ZT}	Z_{ZT} @ I_{ZT}	Z_{ZK} @ I_{ZK}	I_{ZK}	I_R	at V_R
		min.	max.	(mA)	(Ω)	(Ω)	(mA)	(μA)	(V)
RD2.0ES Series, 0.4 W, Case Type : DO-34									
RD20ES	**AB**	18.14	20.45	5	30	200	0.5	0.2	15
	AB1	18.14	18.96						
	AB2	18.80	19.68						
	AB3	19.52	20.45						
RD22ES	**AB**	20.23	22.61	5	30	200	0.5	0.2	17
	AB1	20.23	21.08						
	AB2	20.76	21.65						
	AB3	21.22	22.09						
	AB4	21.68	22.61						
RD24ES	**AB**	22.26	24.81	5	30	200	0.5	0.2	19
	AB1	22.26	23.12						
	AB2	22.75	23.73						
	AB3	23.29	24.27						
	AB4	23.81	24.81						
RD27ES	**AB**	24.26	27.64	5	45	250	0.5	0.2	21
	AB1	24.26	25.52						
	AB2	24.97	26.26						
	AB3	25.63	26.95						
	AB4	26.29	27.64						
RD30ES	**AB**	26.99	30.51	5	55	250	0.5	0.2	23
	AB1	26.99	28.39						
	AB2	27.70	29.13						
	AB3	28.36	29.82						
	AB4	29.02	30.51						
RD33ES	**AB**	29.68	33.11	5	65	250	0.5	0.2	25
	AB1	29.68	31.22						
	AB2	30.32	31.88						
	AB3	30.90	32.50						
	AB4	31.49	33.11						
RD36ES	**AB**	32.14	35.77	5	75	250	0.5	0.2	27
	AB1	32.14	33.79						
	AB2	32.79	34.49						
	AB3	33.40	35.13						
	AB4	34.01	35.77						
RD39ES	**AB**	34.68	38.52	5	85	250	0.5	0.2	30
	AB1	34.68	36.47						
	AB2	35.36	37.19						
	AB3	36.00	37.85						
	AB4	36.63	38.52						



Notes :

(1) Tested with pulse (40 ms)

(2) Z_Z and Z_{ZK} are measured at I_Z by applying a very small AC current signal

(3) When placing an order for an RD2.0ES type, please add suffix e.g. RD2.0ESAB, RD2.0ESAB1… RD39ESAB4

Zener Diodes 0.40 W

Type No.	Suffix (3)	Zener Voltage (1)			Dynamic Impedance		Knee Dynamic Impedance		Reverse Current	
		V_Z (V)			Z_Z(Ω)		Z_{ZK}(Ω)		I_R(μA)	
		Min.	Max.	I_Z (mA)	Max.	Iz (mA)	Max.	Iz (mA)	Max.	V_R (V)
RD4.7JS Series, 0.4 W, Case Type : DO-34										
RD4.7JS	**AB**	4.42	4.90	5	100	5	800	0.5	2.0	1.0
	AB1	4.42	4.61							
	AB2	4.55	4.75							
	AB3	4.69	4.90							
RD5.1JS	**AB**	4.84	5.37	5	80	5	500	0.5	2.0	1.5
	AB1	4.84	5.04							
	AB2	4.98	5.20							
	AB3	5.14	5.37							
RD5.6JS	**AB**	5.31	5.92	5	60	5	200	0.5	1.0	2.5
	AB1	5.31	5.55							
	AB2	5.49	5.73							
	AB3	5.67	5.92							
RD6.2JS	**AB**	5.86	6.53	5	60	5	100	0.5	1.0	3.0
	AB1	5.86	6.12							
	AB2	6.06	6.33							
	AB3	6.26	6.53							
RD6.8JS	**AB**	6.47	7.14	5	40	5	60	0.5	0.5	3.5
	AB1	6.47	6.73							
	AB2	6.65	6.93							
	AB3	6.86	7.14							
RD7.5JS	**AB**	7.06	7.84	5	30	5	60	0.5	0.5	4.0
	AB1	7.06	7.36							
	AB2	7.28	7.60							
	AB3	7.52	7.84							
RD8.2JS	**AB**	7.76	8.64	5	30	5	60	0.5	0.5	5.0
	AB1	7.76	8.10							
	AB2	8.02	8.36							
	AB3	8.28	8.64							
RD9.1JS	**AB**	8.56	9.55	5	30	5	60	0.5	0.5	6.0
	AB1	8.56	8.93							
	AB2	8.85	9.23							
	AB3	9.15	9.55							
RD10JS	**AB**	9.45	10.55	5	30	5	60	0.5	0.1	7.0
	AB1	9.45	9.87							
	AB2	9.77	10.21							
	AB3	10.11	10.55							
RD11JS	**AB**	10.44	11.56	5	30	5	60	0.5	0.1	8.0
	AB1	10.44	10.88							
	AB2	10.76	11.22							
	AB3	11.10	11.56							
RD12JS	**AB**	11.42	12.60	5	30	5	80	0.5	0.1	9.0
	AB1	11.42	11.90							
	AB2	11.74	12.24							
	AB3	12.08	12.60							
RD13JS	**AB**	12.47	13.69	5	37	5	80	0.5	0.1	10
	AB1	12.47	13.03							
	AB2	12.91	13.49							
	AB3	13.37	13.96							



Zener Diodes 0.40 W

Type No.	Suffix (3)	Zener Voltage (1)			Dynamic Impedance		Knee Dynamic Impedance		Reverse Current	
		V_Z (V)			Z_Z(Ω)		Z_{ZK}(Ω)		I_R(μA)	
		Min.	Max.	I_Z (mA)	Max.	Iz (mA)	Max.	Iz (mA)	Max.	V_R (V)
RD4.7JS Series, 0.4 W, Case Type : DO-34										
RD15JS	**AB**	13.84	15.52	5	42	5	80	0.5	0.1	11
	AB1	13.84	14.46							
	AB2	14.34	14.98							
	AB3	14.85	15.52							
RD16JS	**AB**	15.37	17.09	5	50	5	80	0.5	0.1	12
	AB1	15.37	16.01							
	AB2	15.85	16.51							
	AB3	16.35	17.09							
RD18JS	**AB**	16.94	19.03	5	65	5	80	0.5	0.1	13
	AB1	16.94	17.70							
	AB2	17.56	18.53							
	AB3	18.21	19.03							
RD20JS	**AB**	18.86	21.08	5	85	5	100	0.5	0.1	15
	AB1	18.86	19.70							
	AB2	19.52	20.39							
	AB3	20.21	21.08							
RD22JS	**AB**	20.88	23.17	5	100	5	100	0.5	0.1	17
	AB1	20.88	21.77							
	AB2	21.54	22.47							
	AB3	22.23	23.17							
RD24JS	**AB**	22.93	25.57	5	120	5	120	0.5	0.1	19
	AB1	22.93	23.96							
	AB2	23.72	24.78							
	AB3	24.54	25.57							
RD27JS	**AB**	25.20	28.61	5	150	5	150	0.5	0.1	21
	AB1	25.20	26.50							
	AB2	26.19	27.53							
	AB3	27.21	28.61							
RD30JS	**AB**	28.22	31.74	5	200	5	200	0.5	0.1	23
	AB1	28.22	29.66							
	AB2	29.19	30.69							
	AB3	30.20	31.74							
RD33JS	**AB**	32.18	34.83	5	250	5	250	0.5	0.1	25
	AB1	32.18	32.78							
	AB2	32.15	33.79							
	AB3	33.13	34.83							
RD36JS	**AB**	34.12	37.91	5	300	5	300	0.5	0.1	27
	AB1	34.12	35.86							
	AB2	35.07	36.87							
	AB3	36.07	37.91							
RD39JS	**AB**	37.04	40.99	5	360	5	360	0.5	0.1	30
	AB1	37.04	38.94							
	AB2	38.00	39.94							
	AB3	38.99	40.99							



Notes:

(1) Tested with pulse (40 ms).

(2) Z_Z and Z_{ZK} are measured at I_Z by applying a very small AC current signal.

(3) When placing an order for an RD4.7JS type, please add suffix e.g. RD4.7JSAB, RD4.7JSAB1… RD39JSAB3

Zener Diodes 0.50 W

Type No.		Nominal Zener Voltage	Test Current	Maximum Zener Impedance (1)		Maximum Reverse Leakage Current		Typical Temperature Coefficient	Maximum Regulator Current(2)
		V_Z @ I_{ZT}	I_{ZT}	Z_{ZT} @ I_{ZT}	Z_{ZK} at I_{ZK} = 0.25mA	I_R @ V_R		α_{VZ}(%/ °C)	I_{ZM}
Axial Lead	SMD	(V)	(mA)	(Ω)	(Ω)	(μA)	(V)		(mA)
1N5221/ZMM5221 Series,Case Type: DO-35/Mini MELF									
1N5221	**ZMM5221**	2.4	20	30	1200	100	1.0	-0.085	190
1N5222	**ZMM5222**	2.5	20	30	1250	100	1.0	-0.085	182
1N5223	**ZMM5223**	2.7	20	30	1300	75	1.0	-0.080	168
1N5224	**ZMM5224**	2.8	20	30	1400	75	1.0	-0.080	162
1N5225	**ZMM5225**	3.0	20	29	1600	50	1.0	-0.075	152
1N5226	**ZMM5226**	3.3	20	28	1600	25	1.0	-0.070	138
1N5227	**ZMM5227**	3.6	20	24	1700	15	1.0	-0.065	126
1N5228	**ZMM5228**	3.9	20	23	1900	10	1.0	-0.060	115
1N5229	**ZMM5229**	4.3	20	22	2000	5.0	1.0	-0.055	106
1N5230	**ZMM5230**	4.7	20	19	1900	5.0	2.0	± 0.030	97
1N5231	**ZMM5231**	5.1	20	17	1600	5.0	2.0	± 0.030	89
1N5232	**ZMM5232**	5.6	20	11	1600	5.0	3.0	+0.038	81
1N5233	**ZMM5233**	6.0	20	7	1600	5.0	3.5	+0.038	76
1N5234	**ZMM5234**	6.2	20	7	1000	5.0	4.0	+0.045	73
1N5235	**ZMM5235**	6.8	20	5	750	3.0	5.0	+0.050	67
1N5236	**ZMM5236**	7.5	20	6	500	3.0	6.0	+0.058	61
1N5237	**ZMM5237**	8.2	20	8	500	3.0	6.5	+0.062	55
1N5238	**ZMM5238**	8.7	20	8	600	3.0	6.5	+0.065	52
1N5239	**ZMM5239**	9.1	20	10	600	3.0	7.0	+0.068	50
1N5240	**ZMM5240**	10	20	17	600	3.0	8.0	+0.075	45
1N5241	**ZMM5241**	11	20	22	600	2.0	8.4	+0.076	41
1N5242	**ZMM5242**	12	20	30	600	1.0	9.1	+0.077	38
1N5243	**ZMM5243**	13	9.5	13	600	0.5	9.9	+0.079	35
1N5244	**ZMM5244**	14	9.0	15	600	0.1	10	+0.082	32
1N5245	**ZMM5245**	15	8.5	16	600	0.1	11	+0.082	30
1N5246	**ZMM5246**	16	7.8	17	600	0.1	12	+0.083	28
1N5247	**ZMM5247**	17	7.4	19	600	0.1	13	+0.084	27
1N5248	**ZMM5248**	18	7.0	21	600	0.1	14	+0.085	25
1N5249	**ZMM5249**	19	6.6	23	600	0.1	14	+0.086	24
1N5250	**ZMM5250**	20	6.2	25	600	0.1	15	+0.086	23
1N5251	**ZMM5251**	22	5.6	29	600	0.1	17	+0.087	21
1N5252	**ZMM5252**	24	5.2	33	600	0.1	18	+0.088	19.1
1N5253	**ZMM5253**	25	5.0	35	600	0.1	19	+0.089	18.2
1N5254	**ZMM5254**	27	4.6	41	600	0.1	21	+0.090	16.8
1N5255	**ZMM5255**	28	4.5	44	600	0.1	21	+0.091	16.2
1N5256	**ZMM5256**	30	4.2	49	600	0.1	23	+0.091	15.1
1N5257	**ZMM5257**	33	3.8	58	700	0.1	25	+0.092	13.8
1N5258	**ZMM5258**	36	3.4	70	700	0.1	27	+0.093	12.6
1N5259	**ZMM5259**	39	3.2	80	800	0.1	30	+0.094	11.6
1N5260	**ZMM5260**	43	3.0	93	900	0.1	33	+0.095	10.6
1N5261	**ZMM5261**	47	2.7	105	1000	0.1	36	+0.095	9.7
1N5262	**ZMM5262**	51	2.5	125	1100	0.1	39	+0.096	8.9
1N5263	**ZMM5263**	56	2.2	150	1300	0.1	43	+0.096	-
1N5264	**ZMM5264**	60	2.1	170	1400	0.1	46	+0.097	-
1N5265	**ZMM5265**	62	2.0	185	1400	0.1	47	+0.098	-
1N5266	**ZMM5266**	68	1.8	230	1600	0.1	52	+0.097	-
1N5267	**ZMM5267**	75	1.7	270	1700	0.1	56	+0.098	-

Notes :

(1) The Zener impedance is derived from the 1 KHz AC voltage which results when an AC current having an RMS value equal to 10% of the Zener current (I_{ZT} or I_{ZK}) is superimposed on I_{ZT} or I_{ZK}. Zener impedance is measured at two points to ensure a sharp knee on the breakdown curve and to eliminate unstable units

(2) V_F = 1.1 Vmax. @ I_F = 200 mA

(3) Standard Zener voltage tolerance is ± 10%. Add suffix “B” for ± 5% tolerance, Add suffix “C” for ± 2% tolerance .

Zener Diodes 0.50 W

Type No.	Zener Voltage V_Z @ I_{ZT}				Maximum DC Zener Current	Voltage Regulation	Maximum Reverse Leakage Current	
SMD	Min. (V)	Nom.(1) (V)	Max. (V)	I_{ZT} (μA)	I_{ZM}(2) (mA)	ΔV_Z(4) (V)	I_R(3) (μA)	at V_R (V)
TZS4678 Series,Case Type: Mini MELF								
TZS4678	1.710	1.8	1.89	50	120	0.70	7.5	1.0
TZS4679	1.900	2.0	2.10	50	110	0.70	5.0	1.0
TZS4680	2.090	2.2	2.310	50	100	0.75	4.0	1.0
TZS4681	2.280	2.4	2.520	50	95.0	0.80	2.0	1.0
TZS4682	2.565	2.7	2.835	50	90.0	0.85	1.0	1.0
TZS4683	2.850	3.0	3.150	50	85.0	0.90	0.8	1.0
TZS4684	3.135	3.3	3.465	50	80.0	0.95	7.5	1.5
TZS4685	3.420	3.6	3.780	50	75.0	0.95	7.5	2.0
TZS4686	3.705	3.9	4.095	50	70.0	0.97	5.0	2.0
TZS4687	4.085	4.3	4.515	50	65.0	0.99	4.0	2.0
TZS4688	4.465	4.7	4.935	50	60.0	0.99	10	3.0
TZS4689	4.845	5.1	5.355	50	55.0	0.97	10	3.0
TZS4690	5.320	5.6	5.880	50	50.0	0.96	10	4.0
TZS4691	5.890	6.2	6.510	50	45.0	0.95	10	5.0
TZS4692	6.460	6.8	7.140	50	35.0	0.90	10	5.10
TZS4693	7.125	7.5	7.875	50	31.8	0.75	10	5.70
TZS4694	7.790	8.2	8.610	50	29.0	0.50	1.0	6.20
TZS4695	8.265	8.7	9.135	50	27.4	0.10	1.0	6.60
TZS4696	8.645	9.1	9.555	50	26.2	0.08	1.0	6.90
TZS4697	9.500	10	10.50	50	24.8	0.10	1.0	7.60
TZS4698	10.45	11	11.55	50	21.6	0.11	0.05	8.40
TZS4699	11.40	12	12.60	50	20.4	0.12	0.05	9.10
TZS4700	12.35	13	13.65	50	19.0	0.13	0.05	9.80
TZS4701	13.30	14	14.70	50	17.5	0.14	0.05	10.6
TZS4702	14.25	15	15.75	50	16.3	0.15	0.05	11.4
TZS4703	15.20	16	16.80	50	15.4	0.16	0.05	12.1
TZS4704	16.15	17	17.85	50	14.5	0.17	0.05	12.9
TZS4705	17.10	18	18.90	50	13.2	0.18	0.05	13.6
TZS4706	18.05	19	19.95	50	12.5	0.19	0.05	14.4
TZS4707	19.00	20	21.00	50	11.9	0.20	0.01	15.2
TZS4708	20.90	22	23.10	50	10.8	0.22	0.01	16.7
TZS4709	22.80	24	25.20	50	9.90	0.24	0.01	18.2
TZS4710	23.75	25	26.25	50	9.50	0.25	0.01	19.0
TZS4711	25.65	27	28.35	50	8.80	0.27	0.01	20.4
TZS4712	26.60	28	29.40	50	8.50	0.28	0.01	21.2
TZS4713	28.50	30	31.50	50	7.90	0.30	0.01	22.8
TZS4714	31.35	33	34.65	50	7.20	0.33	0.01	25.0
TZS4715	34.20	36	37.80	50	6.60	0.36	0.01	27.3
TZS4716	37.05	39	40.95	50	6.10	0.39	0.01	29.6
TZS4717	40.85	43	45.15	50	5.50	0.43	0.01	32.6

Notes :

(1) The type number shown have a standard tolerance of ± 5% on the nominal zener voltage.

(2) Maximum zener current ratings are based on maximum zener voltage of the individual unit.

(3) Reverse leakage current are guaranteed and measured at V_R as shown on the table.

(4) Voltage change is equal to the difference between V_Z at 100 μA and V_Z at 10 μA.

Zener Diodes 0.50 W

Type No.	Nominal Zener Voltage(3)	Test Current	Maximum Zener Impedance	Maximum Reverse Leakage Current I_R @ V_R=1V		Maximum DC Zener Current (2)
	V_Z @ I_{ZT}	I_{ZT}	Z_{ZT} @ I_{ZT} (1)	Ta=25°C	Ta=150°C	I_{ZM}
	(V)	(mA)	(Ω)	(μA)	(μA)	(mA)
1N746A Series, 0.5 W, Case Type : DO-35						
1N746A	3.3	20	28	10	30	110
1N747A	3.6	20	24	10	30	100
1N748A	3.9	20	23	10	30	95
1N749A	4.3	20	22	2	30	85
1N750A	4.7	20	19	2	30	75
1N751A	5.1	20	17	1	20	70
1N752A	5.6	20	11	1	20	65
1N753A	6.2	20	7	0.1	20	60
1N754A	6.8	20	5	0.1	20	55
1N755A	7.5	20	6	0.1	20	50
1N756A	8.2	20	8	0.1	20	45
1N757A	9.1	20	10	0.1	20	40
1N758A	10	20	17	0.1	20	35
1N759A	12	20	30	0.1	20	30



Notes :

(1) The Zener impedance is derived from the 1 KHz AC voltage which results when an AC current having an RMS value equal to 10% of the Zener current (I_{ZT}) is superimposed on I_{ZT}. Zener impedance is measured at two points to ensure a sharp knee on the breakdown curve and to eliminate unstable units

(2) Valid provided that leads are at a distance of 3/8" from case and kept at ambient temperature.

(3) Measured with device junction in thermal equilibrium

(4) Standard zener voltage tolerance is ± 5% for suffix "A" . Other tolerances are available upon request

(5) V_F = 1.5 Vmax. @ I_F = 200 mA

Zener Diodes 0.50 W

Type No.	Zener Voltage V_Z @ I_{ZT} (3)		Maximum Zener Impedance (1)			Maximum Reverse Leakage Current		Maximum DC Zener Current
	Nominal	I_{ZT}	Z_{ZT} @ I_{ZT}	Z_{Zk} @ I_{ZK}	I_{ZK}	I_R @	V_R	I_{ZM} (2)
	(V)	(mA)	(Ω)	(Ω)	(mA)	(μA)	(V)	(mA)

1N957B Series, 0.5 W, Case Type : DO-35



1N957B	6.8	18.5	4.5	700	1.00	150	5.2	58
1N958B	7.5	16.5	5.5	700	0.50	75	5.7	53
1N959B	8.2	15.0	6.5	700	0.50	50	6.2	47
1N960B	9.1	14.0	7.5	700	0.50	25	6.9	43
1N961B	10	12.5	8.5	700	0.25	10	7.6	40
1N962B	11	11.5	9.5	700	0.25	5	8.4	36
1N963B	12	10.5	11.5	700	0.25	5	9.1	32
1N964B	13	9.5	13	700	0.25	5	9.9	29
1N965B	15	8.5	16	700	0.25	5	11.4	27
1N966B	16	7.8	17	700	0.25	5	12.2	24
1N967B	18	7.0	21	750	0.25	5	13.7	21
1N968B	20	6.2	25	750	0.25	5	15.2	20
1N969B	22	5.6	29	750	0.25	5	16.7	18
1N970B	24	5.2	33	750	0.25	5	18.2	16
1N971B	27	4.6	41	750	0.25	5	20.6	14
1N972B	30	4.2	49	1000	0.25	5	22.8	13
1N973B	33	3.8	58	1000	0.25	5	25.1	12
1N974B	36	3.4	70	1000	0.25	5	27.4	11
1N975B	39	3.2	80	1000	0.25	5	29.7	10
1N976B	43	3.0	93	1500	0.25	5	32.7	9.2
1N977B	47	2.7	105	1500	0.25	5	35.8	8.5
1N978B	51	2.5	125	1500	0.25	5	38.8	7.8
1N979B	56	2.2	150	2000	0.25	5	42.6	6.9
1N980B	62	2.0	185	2000	0.25	5	47.1	6.3
1N981B	68	1.8	230	2000	0.25	5	51.7	5.7
1N982B	75	1.7	270	2000	0.25	5	56.0	5.2
1N983B	82	1.5	330	3000	0.25	5	62.2	4.7
1N984B	91	1.4	440	3000	0.25	5	69.2	4.3

Notes :

(1) The Zener Impedance is derived from the 1 KHz AC voltage which results when an AC current having an RMS value equal to 10% of the Zener current (I_{ZT}) is superimposed on I_{ZT}. Zener Impedance is measured at two points to ensure a sharp knee on the breakdown curve and to eliminate unstable units.

(2) Valid provided that leads are at a distance of 3/8" from case and kept at 25°C ambient temperature.

(3 Measured with device junction in thermal equilibrium.

(4) Standard zener voltage tolerance is ± 5% for suffix "B". Other tolerances are available upon request.

(5) V_F = 1.5 Vmax. @ I_F = 200 mA

Zener Diodes 0.50 W

Type No.	Zener Voltage V_Z @ I_{ZT}				Maximum Zener Impedance			Maximum Reverse Leakage Current, I_R			Temp. coefficient of Zener Voltage at Iz = 5mA	Admissible Zener Current[2]
	Nom[1]	Min	Max	I_{ZT}	Z_{ZT} @ I_{ZT}	Z_{Zk} @ I_{ZK}	I_{ZK}	Ta=25°C	Ta=150°C	At V_R		
	(V)	(V)	(V)	(mA)	(Ω)	(Ω)	(mA)	(μA)	(μA)	(V)	αvz(% / C)	I_{ZM} (mA)
BZX55 Series, 0.5 W, Case Type : DO-35												
BZX55C2V0	2.0	1.90	2.10	5.0	85	600	1.0	100	200	1.0	-0.09...-0.06	175
BZX55C2V2	2.2	2.09	2.31	5.0	85	600	1.0	50	100	1.0	-0.09...-0.06	160
BZX55C2V4	2.4	2.28	2.56	5.0	85	600	1.0	50	100	1.0	-0.09...-0.06	145
BZX55C2V7	2.7	2.5	2.9	5.0	85	600	1.0	10	50	1.0	-0.09...-0.06	135
BZX55C3V0	3.0	2.8	3.2	5.0	85	600	1.0	4.0	40	1.0	-0.08...-0.05	125
BZX55C3V3	3.3	3.1	3.5	5.0	85	600	1.0	2.0	40	1.0	-0.08...-0.05	115
BZX55C3V6	3.6	3.4	3.8	5.0	85	600	1.0	2.0	40	1.0	-0.08...-0.05	105
BZX55C3V9	3.9	3.7	4.1	5.0	85	600	1.0	2.0	40	1.0	-0.08...-0.05	95
BZX55C4V3	4.3	4.0	4.6	5.0	75	600	1.0	1.0	20	1.0	-0.06...-0.03	90
BZX55C4V7	4.7	4.4	5.0	5.0	60	600	1.0	0.5	10	1.0	-0.05...+0.02	85
BZX55C5V1	5.1	4.8	5.4	5.0	35	550	1.0	0.1	2	1.0	-0.02...+0.02	80
BZX55C5V6	5.6	5.2	6.0	5.0	25	450	1.0	0.1	2	1.0	-0.05...+0.05	70
BZX55C6V2	6.2	5.8	6.6	5.0	10	200	1.0	0.1	2	2.0	0.03...0.06	64
BZX55C6V8	6.8	6.4	7.2	5.0	8	150	1.0	0.1	2	3.0	0.03...0.07	58
BZX55C7V5	7.5	7.0	7.9	5.0	7	50	1.0	0.1	2	5.0	0.03...0.07	53
BZX55C8V2	8.2	7.7	8.7	5.0	7	50	1.0	0.1	2	6.2	0.03...0.08	47
BZX55C9V1	9.1	8.5	9.6	5.0	10	50	1.0	0.1	2	6.8	0.03...0.09	43
BZX55C10	10	9.4	10.6	5.0	15	70	1.0	0.1	2	7.5	0.03...0.10	40
BZX55C11	11	10.4	11.6	5.0	20	70	1.0	0.1	2	8.2	0.03...0.11	36
BZX55C12	12	11.4	12.7	5.0	20	90	1.0	0.1	2	9.1	0.03...0.11	32
BZX55C13	13	12.4	14.1	5.0	26	110	1.0	0.1	2	10	0.03...0.11	29
BZX55C15	15	13.8	15.6	5.0	30	110	1.0	0.1	2	11	0.03...0.11	28
BZX55C16	16	15.3	17.1	5.0	40	170	1.0	0.1	2	12	0.03...0.11	27
BZX55C18	18	16.8	19.1	5.0	50	170	1.0	0.1	2	13	0.03...0.11	24
BZX55C20	20	18.8	21.2	5.0	55	220	1.0	0.1	2	15	0.03...0.11	21
BZX55C22	22	20.8	23.3	5.0	55	220	1.0	0.1	2	16	0.04...0.12	20
BZX55C24	24	22.8	25.6	5.0	80	220	1.0	0.1	2	18	0.04...0.12	18
BZX55C27	27	25.1	28.9	5.0	80	220	1.0	0.1	2	20	0.04...0.12	16
BZX55C30	30	28	32	5.0	80	220	1.0	0.1	2	22	0.04...0.12	14
BZX55C33	33	31	35	5.0	80	220	1.0	0.1	2	24	0.04...0.12	13
BZX55C36	36	34	38	5.0	80	220	1.0	0.1	2	27	0.04...0.12	12
BZX55C39	39	37	41	2.5	90	500	0.5	0.1	5	30	0.04...0.12	11
BZX55C43	43	40	46	2.5	90	500	0.5	0.1	5	33	0.04...0.12	10
BZX55C47	47	44	50	2.5	110	600	0.5	0.1	5	36	0.04...0.12	9.2
BZX55C51	51	48	54	2.5	125	700	0.5	0.1	10	39	0.04...0.12	8.5
BZX55C56	56	52	60	2.5	135	700	0.5	0.1	10	43	typ. 0.1[4]	7.8
BZX55C62	62	58	66	2.5	150	1000	0.5	0.1	10	47	typ. 0.1[4]	7.0
BZX55C68	68	64	72	2.5	200	1000	0.5	0.1	10	51	typ. 0.1[4]	6.4
BZX55C75	75	70	79	2.5	250	1000	0.5	0.1	10	56	typ. 0.1[4]	5.9
BZX55C82	82	77	87	2.5	300	1500	0.5	0.1	10	62	typ. 0.1[4]	5.3
BZX55C91	91	85	96	1.0	450	2000	0.1	0.1	10	68	typ. 0.1[4]	4.8
BZX55C100	100	94	106	1.0	450	5000	0.1	0.1	10	75	typ. 0.1[4]	4.4



Notes:

(1) Tested with pulse tp = 20 ms

(2) Valid provided that leads are kept at ambient temperature at a distance of 8 mm from case

(3) For ± 2% tolerance replace the sixth letter of the type from "C" to "B" e.g. BZX55B15

(4) At I_Z = 2.5 mA

(5) V_F = 1 Vmax. @ I_F = 100 mA

Zener Diodes 0.50 W

Type No.	Zener Voltage V_Z @ I_{ZT}		Maximum Zener Impedance , f = 1kHz			Maximum Reverse Leakage Current		Temp. coefficient of Zener Voltage at I_{ZT}
	Nom (1)	I_{ZT}	Z_{ZT} @ I_{ZT}	Z_{Zk} @ I_{ZK}	I_{ZK}	I_R	at V_R	
	(V)	(mA)	(Ω)	(Ω)	(mA)	(μA)	(V)	α_{vz}(% /°C)
BZV55 Series, 0.5 W, Case Type : Mini MELF								
BZV55C2V4	2.4	5.0	100	600	1.0	50	1.0	-0.08...-0.06
BZV55C2V7	2.7	5.0	100	600	1.0	20	1.0	-0.08...-0.06
BZV55C3V0	3.0	5.0	95	600	1.0	10	1.0	-0.08...-0.05
BZV55C3V3	3.3	5.0	95	600	1.0	5.0	1.0	-0.08...-0.05
BZV55C3V6	3.6	5.0	90	600	1.0	5.0	1.0	-0.08...-0.04
BZV55C3V9	3.9	5.0	90	600	1.0	3.0	1.0	-0.07...-0.03
BZV55C4V3	4.3	5.0	90	600	1.0	3.0	1.0	-0.04...-0.01
BZV55C4V7	4.7	5.0	80	500	1.0	3.0	2.0	-0.03...+0.01
BZV55C5V1	5.1	5.0	60	480	1.0	2.0	2.0	-0.02...+0.05
BZV55C5V6	5.6	5.0	40	400	1.0	1.0	2.0	-0.01...+0.06
BZV55C6V2	6.2	5.0	10	150	1.0	3.0	4.0	0.00...0.07
BZV55C6V8	6.8	5.0	15	80	1.0	2.0	4.0	0.01...0.08
BZV55C7V5	7.5	5.0	15	80	1.0	1.0	5.0	0.01...0.09
BZV55C8V2	8.2	5.0	15	80	1.0	0.7	5.0	0.01...0.09
BZV55C9V1	9.1	5.0	15	100	1.0	0.5	6.0	0.02...0.10
BZV55C10	10	5.0	20	150	1.0	0.2	7.0	0.03...0.11
BZV55C11	11	5.0	20	150	1.0	0.1	8.0	0.03...0.11
BZV55C12	12	5.0	25	150	1.0	0.1	8.0	0.03...0.11
BZV55C13	13	5.0	30	170	1.0	0.1	8.0	0.03...0.11
BZV55C15	15	5.0	30	200	1.0	0.05	10	0.03...0.11
BZV55C16	16	5.0	40	200	1.0	0.05	11	0.03...0.11
BZV55C18	18	5.0	45	225	1.0	0.05	13	0.03...0.11
BZV55C20	20	5.0	55	225	1.0	0.05	14	0.03...0.11
BZV55C22	22	5.0	55	250	1.0	0.05	15	0.03...0.11
BZV55C24	24	5.0	70	250	1.0	0.05	17	0.04...0.12
BZV55C27	27	2.0	80	300	0.5	0.05	19	0.04...0.12
BZV55C30	30	2.0	80	300	0.5	0.05	21	0.04...0.12
BZV55C33	33	2.0	80	325	0.5	0.05	23	0.04...0.12
BZV55C36	36	2.0	90	350	0.5	0.05	25	0.04...0.12
BZV55C39	39	2.0	130	350	0.5	0.05	27	0.04...0.12
BZV55C43	43	2.0	150	375	0.5	0.05	30	0.04...0.12
BZV55C47	47	2.0	170	375	0.5	0.05	33	0.04...0.12
BZV55C51	51	2.0	180	400	0.5	0.05	36	0.04...0.12
BZV55C56	56	2.0	200	425	0.5	0.05	39	0.1 (typ.)
BZV55C62	62	2.0	215	450	0.5	0.05	43	0.1 (typ.)
BZV55C68	68	2.0	240	475	0.5	0.05	48	0.1 (typ.)
BZV55C75	75	2.0	255	500	0.5	0.05	53	0.1 (typ.)



Notes.

(1) Tested with pulse tp = 5 ms

(2) The type numbers listed have a standard tolerance on the nominal zener voltage of ± 5%
For ± 2% tolerance replace the sixth letter of the type from "C" to "B" e.g. BZV55B15

(3) V_F = 0.9 Vmax. @ I_F = 10 mA

Zener Diodes 0.50 W

Type No.	Zener Voltage V_Z @ I_{ZT}		Maximum Zener Impedance , f = 1kHz			Maximum Reverse Leakage Current		Temp. coefficient of Zener Voltage	Admissible Zener Current (2)	Maximum Capacitance
	Nom (1)	I_{ZT}	Z_{ZT} @ I_{ZT}	Z_{Zk} @ I_{ZK}	I_{ZK}	I_R	at V_R	at I_{ZT}	I_Z	V_R=0, f=1MHz
	(V)	(mA)	(Ω)	(Ω)	(mA)	(μA)	(V)	α_{mvz}(% / °C)	(mA)	(pF)
BZX79 Series, 0.5 W, Case Type : DO-35										
BZX79C2V4	2.4	5.0	100	600	1.0	50	1.0	-0.08...-0.06	167	450
BZX79C2V7	2.7	5.0	100	600	1.0	20	1.0	-0.08...-0.06	135	450
BZX79C3V0	3.0	5.0	95	600	1.0	10	1.0	-0.08...-0.05	125	450
BZX79C3V3	3.3	5.0	95	600	1.0	5.0	1.0	-0.08...-0.05	115	450
BZX79C3V6	3.6	5.0	90	600	1.0	5.0	1.0	-0.08...-0.04	105	450
BZX79C3V9	3.9	5.0	90	600	1.0	3.0	1.0	-0.07...-0.03	95	450
BZX79C4V3	4.3	5.0	90	600	1.0	3.0	1.0	-0.04...-0.01	90	450
BZX79C4V7	4.7	5.0	80	500	1.0	3.0	1.0	-0.03...+0.01	85	300
BZX79C5V1	5.1	5.0	60	480	1.0	2.0	1.0	-0.02...+0.05	80	300
BZX79C5V6	5.6	5.0	40	400	1.0	1.0	1.0	-0.01...+0.06	70	300
BZX79C6V2	6.2	5.0	10	150	1.0	3.0	2.0	0.00...0.07	64	200
BZX79C6V8	6.8	5.0	15	80	1.0	2.0	3.0	0.01...0.08	58	200
BZX79C7V5	7.5	5.0	15	80	1.0	1.0	5.0	0.01...0.09	53	150
BZX79C8V2	8.2	5.0	15	80	1.0	0.7	6.0	0.01...0.09	47	150
BZX79C9V1	9.1	5.0	15	100	1.0	0.5	7.0	0.02...0.10	43	150
BZX79C10	10	5.0	20	150	1.0	0.2	7.5	0.03...0.11	40	90
BZX79C11	11	5.0	20	150	1.0	0.1	8.5	0.03...0.11	36	85
BZX79C12	12	5.0	25	150	1.0	0.1	9.0	0.03...0.11	32	85
BZX79C13	13	5.0	30	170	1.0	0.1	10	0.03...0.11	29	80
BZX79C15	15	5.0	30	200	1.0	0.05	11	0.03...0.11	27	75
BZX79C16	16	5.0	40	200	1.0	0.05	12	0.03...0.11	24	75
BZX79C18	18	5.0	45	225	1.0	0.05	14	0.03...0.11	21	70
BZX79C20	20	5.0	55	225	1.0	0.05	15	0.03...0.11	20	60
BZX79C22	22	5.0	55	250	1.0	0.05	17	0.03...0.11	18	60
BZX79C24	24	5.0	70	250	1.0	0.05	18	0.04...0.12	16	55
BZX79C27	27	2.0	80	300	0.5	0.05	20	0.04...0.12	14	50
BZX79C30	30	2.0	80	300	0.5	0.05	22	0.04...0.12	13	50
BZX79C33	33	2.0	80	325	0.5	0.05	24	0.04...0.12	12	45
BZX79C36	36	2.0	90	350	0.5	0.05	27	0.04...0.12	11	45
BZX79C39	39	2.0	130	350	0.5	0.05	28	0.04...0.12	10	45
BZX79C43	43	2.0	150	375	0.5	0.05	32	0.04...0.12	9.2	40
BZX79C47	47	2.0	170	375	0.5	0.05	35	0.04...0.12	8.5	40
BZX79C51	51	2.0	180	400	0.5	0.05	38	0.04...0.12	7.8	40
BZX79C56	56	2.0	200	425	0.5	0.05	39	0.1(typ.)	7.1	40
BZX79C62	62	2.0	215	450	0.5	0.05	43	0.1(typ.)	6.4	35
BZX79C68	68	2.0	240	475	0.5	0.05	48	0.1(typ.)	5.8	35
BZX79C75	75	2.0	255	500	0.5	0.05	53	0.1(typ.)	5.3	35



Notes:

(1) Tested with pulse tp = 5 ms

(2) Valid provided that leads are kept at ambient temperature at a distance of 8 mm from case

(3) The type numbers listed have a standard tolerance on the nominal zener voltage of ± 5%
For ± 2% tolerance replace the sixth letter of the type from "C" to "B" e.g. BZX79B13

(4) V_F = 0.9 Vmax. @ I_F = 10 mA

Zener Diodes 0.50 W

Type No.	Suffix (2)	Zener Voltage		Test Current	Maximum Zener Impedance , f = 1kHz			Maximum Reverse Current	
		V_Z (V) at I_{ZT} (1)		I_{ZT}	Z_{ZT} @ I_{ZT}	Z_{ZK} @ I_{ZK}	I_{ZK}	I_R	at V_R
		min.	max.	(mA)	(Ω)	(Ω)	(mA)	(μA)	(V)
GLZ Series, 0.5 W, Case Type : Mini MELF									
GLZ3.3	**A**	3.160	3.380	20	70	1000	1	20	1
	B	3.320	3.530						
GLZ3.6	**A**	3.455	3.695	20	60	1000	1	10	1
	B	3.600	3.845						
GLZ3.9	**A**	3.74	4.01	20	50	1000	1	5	1
	B	3.89	4.16						
GLZ4.3	**A**	4.04	4.29	20	40	1000	1	5	1
	B	4.17	4.43						
	C	4.30	4.57						
GLZ4.7	**A**	4.44	4.68	20	25	900	1	5	1
	B	4.55	4.80						
	C	4.68	4.93						
GLZ5.1	**A**	4.81	5.07	20	20	800	1	5	1.5
	B	4.94	5.20						
	C	5.09	5.37						
GLZ5.6	**A**	5.28	5.55	20	13	500	1	5	2.5
	B	5.45	5.73						
	C	5.61	5.91						
GLZ6.2	**A**	5.78	6.09	20	10	300	1	5	3
	B	5.96	6.27						
	C	6.12	6.44						
GLZ6.8	**A**	6.29	6.63	20	8	150	0.5	2	3.5
	B	6.49	6.83						
	C	6.66	7.01						
GLZ7.5	**A**	6.85	7.22	20	8	120	0.5	0.5	4
	B	7.07	7.45						
	C	6.29	7.67						
GLZ8.2	**A**	7.53	7.92	20	8	120	0.5	0.5	5
	B	7.78	8.19						
	C	8.03	8.45						
GLZ9.1	**A**	8.29	8.73	20	8	120	0.5	0.5	6
	B	8.57	9.01						
	C	8.83	9.30						
GLZ10	**A**	9.12	9.59	20	8	120	0.5	0.2	7
	B	9.41	9.90						
	C	9.70	10.20						
	D	9.94	10.44						
GLZ11	**A**	10.18	10.71	20	10	120	0.5	0.2	8
	B	10.50	115.00						
	C	10.82	11.38						
GLZ12	**A**	11.13	11.71	20	12	110	0.5	0.2	9
	B	11.44	12.03						
	C	11.74	12.35						
GLZ13	**A**	12.11	12.75	10	14	110	0.5	0.2	10
	B	12.55	13.21						
	C	12.99	13.66						



Zener Diodes 0.50 W

Type No.	Suffix (2)	Zener Voltage		Test Current	Maximum Zener Impedance , f = 1kHz			Maximum Reverse Current	
		V_Z (V) at I_{ZT} (1)		I_{ZT}	Z_{ZT} @ I_{ZT}	Z_{ZK} @ I_{ZK}	I_{ZK}	I_R	at V_R
		min.	max.	(mA)	(Ω)	(Ω)	(mA)	(μA)	(V)
GLZ Series, 0.5 W, Case Type : Mini MELF									
GLZ15	**A**	13.45	14.13	10	16	110	0.5	0.2	11
	B	13.89	14.62						
	C	14.35	15.09						
GLZ16	**A**	14.80	15.57	10	18	150	0.5	0.2	12
	B	15.25	16.04						
	C	15.69	16.51						
GLZ18	**A**	16.22	17.06	10	23	150	0.5	0.2	13
	B	16.82	17.70						
	C	17.42	18.33						
GLZ20	**A**	18.02	18.96	10	28	200	0.5	0.2	15
	B	18.63	19.59						
	C	19.23	20.22						
	D	19.72	20.72						
GLZ22	**A**	20.15	21.20	5	30	200	0.5	0.2	17
	B	20.64	21.71						
	C	21.08	22.17						
	D	21.52	22.63						
GLZ24	**A**	22.05	23.18	5	35	200	0.5	0.2	19
	B	22.61	23.77						
	C	23.12	24.31						
	D	23.63	24.85						
GLZ27	**A**	24.26	25.52	5	45	200	0.5	0.2	21
	B	24.97	26.26						
	C	25.63	26.95						
	D	26.29	27.54						
GLZ30	**A**	26.99	28.39	5	55	250	0.5	0.2	23
	B	27.70	29.13						
	C	28.36	29.82						
	D	29.20	30.51						
GLZ33	**A**	29.68	31.22	5	65	250	0.5	0.2	25
	B	30.32	31.88						
	C	30.90	32.50						
	D	31.49	33.11						
GLZ36	**A**	31.14	33.79	5	75	250	0.5	0.2	27
	B	32.76	34.49						
	C	33.40	35.13						
	D	34.01	35.77						
GLZ39	**A**	34.68	36.47	5	85	250	0.5	0.2	30
	B	35.36	37.19						
	C	36.00	37.85						
	D	36.63	38.52						



Notes:

(1) The Zener voltage is measured 40ms after power is supplied

(2) When ordering use suffix "A", "B", "C" or "D" to specify zener voltage e.g. GLZ3.3A….GLZ39D

Zener Diodes 0.50 W

Type No.	Grade	Zener Voltage V_Z @ I_{ZT}						Test Current	Maximum Dynamic Resistance		Maximum Reverse Current	
		Suffix -1		Suffix -2		Suffix -3						
		min.	max.	min.	max.	min.	max.	I_{ZT}	rd @	I_Z	I_R @	V_R
		(V)	(V)	(V)	(V)	(V)	(V)	(mA)	(Ω)	(mA)	(μA)	(V)

HZ Series, 0.5 W, Case Type : DO-35



HZ2	**A**	1.6	1.8	1.7	1.9	1.8	2.0	5	100	5	25	0.5
	B	1.9	2.1	2.0	2.2	2.1	2.3	5	100	5	2	0.5
	C	2.2	2.4	2.3	2.5	2.4	2.6	5	100	5	1	0.5
HZ3	**A**	2.5	2.7	2.6	2.8	2.7	2.9	5	100	5	1	0.5
	B	2.8	3.0	2.9	3.1	3.0	3.2	5	100	5	1	0.5
	C	3.1	3.3	3.2	3.4	3.3	3.5	5	100	5	1	0.5
HZ4	**A**	3.4	3.6	3.5	3.7	3.6	3.8	5	100	5	5	1.0
	B	3.7	3.9	3.8	4.0	3.9	4.1	5	100	5	5	1.0
	C	4.0	4.2	4.1	4.3	4.2	4.4	5	100	5	5	1.0
HZ5	**A**	4.3	4.5	4.4	4.6	4.5	4.7	5	100	5	5	1.5
	B	4.6	4.8	4.7	4.9	4.8	5.0	5	100	5	5	1.5
	C	4.9	5.1	5.0	5.2	5.1	5.3	5	100	5	5	1.5
HZ6	**A**	5.2	5.5	5.3	5.6	5.4	5.7	5	35	5	5	2.0
	B	5.5	5.8	5.6	5.9	5.7	6.0	5	35	5	5	2.0
	C	5.8	6.1	6.0	6.3	6.1	6.4	5	35	5	5	2.0
HZ7	**A**	6.3	6.6	6.4	6.7	6.6	6.9	5	15	5	1	3.5
	B	6.7	7.0	6.9	7.2	7.0	7.3	5	15	5	1	3.5
	C	7.2	7.6	7.3	7.7	7.5	7.9	5	15	5	1	3.5
HZ9	**A**	7.7	8.1	7.9	8.3	8.1	8.5	5	20	5	1	5.0
	B	8.3	8.7	8.5	8.9	8.7	9.1	5	20	5	1	5.0
	C	8.9	9.3	9.1	9.5	9.3	9.7	5	20	5	1	5.0
HZ11	**A**	9.5	9.9	9.7	10.1	9.9	10.3	5	25	5	1	7.5
	B	10.2	10.6	10.4	10.8	10.7	11.1	5	25	5	1	7.5
	C	10.9	11.3	11.1	11.6	11.4	11.9	5	25	5	1	7.5
HZ12	**A**	11.6	12.1	11.9	12.4	12.2	12.7	5	35	5	1	9.5
	B	12.4	12.9	12.6	13.1	12.9	13.4	5	35	5	1	9.5
	C	13.2	13.7	13.5	14.0	13.8	14.3	5	35	5	1	9.5
HZ15		14.1	14.7	14.5	15.1	14.9	15.5	5	40	5	1	11
HZ16		15.3	15.9	15.7	16.5	16.3	17.1	5	45	5	1	12
HZ18		16.9	17.7	17.5	18.3	18.1	19.0	5	55	5	1	13
HZ20		18.8	19.7	19.5	20.4	20.2	21.1	2	60	2	1	15
HZ22		20.9	21.9	21.6	22.6	22.3	23.3	2	65	2	1	17
HZ24		22.9	24.0	23.6	24.7	24.3	25.5	2	70	2	1	19
HZ27		25.2	26.6	26.2	27.6	27.2	28.6	2	80	2	1	21
HZ30		28.2	29.6	29.2	30.6	30.2	31.6	2	100	2	1	23
HZ33		31.2	32.6	32.2	33.6	33.2	34.6	2	120	2	1	25
HZ36		34.2	35.7	35.3	36.8	36.4	38.0	2	140	2	1	27

Note : The lower voltage types (HZ2 - HZ12) are available in 3 grades, "A" to "C", each with suffix "-1", "-2" or "-3"

For example the type with Vz = 8.5 - 8.9V is HZ9B-2

The higher voltage types are only available with suffix "-1", "-2" or "-3" (no grade) e.g. HZ36-3

Zener Diodes 0.50 W

The plastic material carries U/L recognition 94V-0.

Type No.	Marking	Zener Voltage (2) V_Z @ I_{ZT} (V)			Test Current I_{ZT}	Dynamic Impedance (3) Z_{ZT} @ I_{ZT}		Max. Reverse Leakage Current I_R @ V_R		Temp. Coefficient of Zener Voltage TK_{VZ} (%/K)	
		Min.	Nom.	Max.	(mA)	(Ω)	(mA)	(μA)	(V)	Min.	Max.
MM1Z2V4 Series, 0.5 W, Case Type : SOD-123											
MM1Z2V4	**4C**	2.28	2.4	2.56	5.0	100	5	120	1.0	-0.09	-0.06
MM1Z2V7	**4D**	2.5	2.7	2.9	5.0	110	5	120	1.0	-0.09	-0.06
MM1Z3V0	**4E**	2.8	3.0	3.2	5.0	120	5	50	1.0	-0.08	-0.05
MM1Z3V3	**4F**	3.1	3.3	3.5	5.0	130	5	20	1.0	-0.08	-0.05
MM1Z3V6	**4H**	3.4	3.6	3.8	5.0	130	5	10	1.0	-0.08	-0.05
MM1Z3V9	**4J**	3.7	3.9	4.1	5.0	130	5	5.0	1.0	-0.08	-0.05
MM1Z4V3	**4K**	4.0	4.3	4.6	5.0	130	5	5.0	1.0	-0.06	-0.03
MM1Z4V7	**4M**	4.4	4.7	5.0	5.0	130	5	2.0	1.0	-0.05	+0.02
MM1Z5V1	**4N**	4.8	5.1	5.4	5.0	130	5	2.0	1.5	-0.02	+0.02
MM1Z5V6	**4P**	5.2	5.6	6.0	5.0	80	5	1.0	2.5	-0.05	+0.05
MM1Z6V2	**4R**	5.8	6.2	6.6	5.0	50	5	1.0	3.0	0.03	0.06
MM1Z6V8	**4X**	6.4	6.8	7.2	5.0	30	5	0.5	3.5	0.03	0.07
MM1Z7V5	**4Y**	7.0	7.5	7.9	5.0	30	5	0.5	4.0	0.03	0.07
MM1Z8V2	**4Z**	7.7	8.2	8.7	5.0	30	5	0.5	5.0	0.03	0.08
MM1Z9V1	**5A**	8.5	9.1	9.6	5.0	30	5	0.5	6.0	0.03	0.09
MM1Z10	**5B**	9.4	10	10.6	5.0	30	5	0.1	7.0	0.03	0.1
MM1Z11	**5C**	10.4	11	11.6	5.0	30	5	0.1	8.0	0.03	0.11
MM1Z12	**5D**	11.4	12	12.7	5.0	35	5	0.1	9.0	0.03	0.11
MM1Z13	**5E**	12.4	13	14.1	5.0	35	5	0.1	10	0.03	0.11
MM1Z15	**5F**	13.8	15	15.6	5.0	40	5	0.1	11	0.03	0.11
MM1Z16	**5H**	15.3	16	17.1	5.0	40	5	0.1	12	0.03	0.11
MM1Z18	**5J**	16.8	18	19.1	5.0	45	5	0.1	13	0.03	0.11
MM1Z20	**5K**	18.8	20	21.2	5.0	50	5	0.1	15	0.03	0.11
MM1Z22	**5M**	20.8	22	23.3	5.0	55	5	0.1	17	0.04	0.12
MM1Z24	**5N**	22.8	24	25.6	5.0	60	5	0.1	19	0.04	0.12
MM1Z27	**5P**	25.1	27	28.9	5.0	70	2	0.1	21	0.04	0.12
MM1Z30	**5R**	28.0	30	32.0	5.0	80	2	0.1	23	0.04	0.12
MM1Z33	**5X**	31.0	33	35.0	5.0	80	2	0.1	25	0.04	0.12
MM1Z36	**5Y**	34.0	36	38.0	5.0	90	2	0.1	27	0.04	0.12
MM1Z39	**5Z**	37.0	39	41.0	2.5	100	2	2.0	30	0.04	0.12
MM1Z43	**6A**	40.0	43	46.0	2.5	130	2	2.0	33	0.04	0.12
MM1Z47	**6B**	44.0	47	50.0	2.5	150	2	2.0	36	0.04	0.12
MM1Z51	**6C**	48.0	51	54.0	2.5	180	2	1.0	39	0.04	0.12
MM1Z56	**6D**	52.0	56	60.0	2.5	180	2	1.0	43	0.04	0.12
MM1Z62	**6E**	58.0	62	66.0	2.5	200	2	0.2	47	0.04	0.12
MM1Z68	**6F**	64.0	68	72.0	2.5	250	2	0.2	52	0.04	0.12
MM1Z75	**6H**	70.0	75	79.0	2.5	300	2	0.2	57	0.04	0.12



Notes :

(1) The type number shown have a standard tolerance of ±5% on the nominal Zener Voltage.

(2) V_Z is tested with pulses (20ms).

(3) V_Z is measured at I_Z by given a very small A.C. current signal.

Zener Diodes 0.50 W

The plastic material carries U/L recognition 94V-0.

TYPE NO.	Marking	Zener Voltage (1)			Test Current	Dynamic Impedance (2)		Max. Reverse Leakage Current		Temp. Coefficient of Zener Voltage	
		V_Z @ I_{ZT} (V)			I_{ZT}	Z_{ZT} @ I_{ZT}		I_R @ V_R		TK_{VZ} (%/K)	
		Min.	Nom.	Max.	(mA)	(Ω)	(mA)	(μA)	(V)	Min.	Max.
MM1Z2V7B Series, 0.5 W, Case Type : SOD-123											
MM1Z2V7B	**9D**	2.65	2.7	2.95	5	110	5	120	1.0	-0.09	-0.06
MM1Z3V0B	**9E**	2.95	3.0	3.25	5	120	5	50	1.0	-0.08	-0.05
MM1Z3V3B	**9F**	3.25	3.3	3.55	5	130	5	20	1.0	-0.08	-0.05
MM1Z3V6B	**9H**	3.60	3.6	3.845	5	130	5	10	1.0	-0.08	-0.05
MM1Z3V9B	**9J**	3.89	3.9	4.16	5	130	5	5.0	1.0	-0.08	-0.05
MM1Z4V3B	**9K**	4.17	4.3	4.43	5	130	5	5.0	1.0	-0.06	-0.03
MM1Z4V7B	**9M**	4.55	4.7	4.80	5	130	5	2.0	1.0	-0.05	+0.02
MM1Z5V1B	**9N**	4.95	5.1	5.20	5	130	5	2.0	1.5	-0.02	+0.02
MM1Z5V6B	**9P**	5.45	5.6	5.73	5	80	5	1.0	2.5	-0.05	+0.05
MM1Z6V2B	**9R**	6.00	6.2	6.33	5	50	5	1.0	3.0	0.03	0.06
MM1Z6V8B	**9X**	6.65	6.8	7.00	5	30	5	0.5	3.5	0.03	0.07
MM1Z7V5B	**9Y**	7.28	7.5	7.70	5	30	5	0.5	4.0	0.03	0.07
MM1Z8V2B	**9Z**	8.02	8.2	8.45	5	30	5	0.5	5.0	0.03	0.08
MM1Z9V1B	**0A**	8.80	9.1	9.30	5	30	5	0.5	6.0	0.03	0.09
MM1Z10B	**0B**	9.75	10	10.30	5	30	5	0.1	7.0	0.03	0.10
MM1Z11B	**0C**	10.70	11	11.28	5	30	5	0.1	8.0	0.03	0.11
MM1Z12B	**0D**	11.70	12	12.30	5	35	5	0.1	9.0	0.03	0.11
MM1Z13B	**0E**	12.43	13	14.00	5	35	5	0.1	10	0.03	0.11
MM1Z15B	**0F**	13.80	15	15.56	5	40	5	0.1	11	0.03	0.11
MM1Z16B	**0H**	15.31	16	17.14	5	40	5	0.1	12	0.03	0.11
MM1Z18B	**0J**	16.89	18	19.08	5	45	5	0.1	13	0.03	0.11
MM1Z20B	**0K**	18.80	20	21.14	5	50	5	0.1	15	0.03	0.11
MM1Z22B	**0M**	20.81	22	23.25	5	55	5	0.1	17	0.04	0.12
MM1Z24B	**0N**	22.86	24	25.66	5	60	5	0.1	19	0.04	0.12
MM1Z27B	**0P**	25.10	27	28.90	5	70	2	0.1	21	0.04	0.12
MM1Z30B	**0R**	28.00	30	32.00	5	80	2	0.1	23	0.04	0.12
MM1Z33B	**0X**	31.00	33	35.00	5	80	2	0.1	25	0.04	0.12
MM1Z36B	**0Y**	34.00	36	38.00	5	90	2	0.1	27	0.04	0.12
MM1Z39B	**0Z**	37.00	39	41.00	5	100	2	2.0	30	0.04	0.12
MM1Z36B	**0Y**	34.00	36	38.00	5	90	2	0.1	27	0.04	0.12
MM1Z39B	**0Z**	37.00	39	41.00	5	100	2	2.0	30	0.04	0.12



Notes :

(1) V_Z is tested with pulses (20ms).

(2) V_Z is measured at I_Z by given a very small A.C. current signal.

Zener Diodes 0.50 W

The plastic material carries U/L recognition 94V-0.

Type No.	Marking	Zener Voltage (1,2) V_Z @ I_{ZT} (V)			Test Current I_{ZT}	Maximum Reverse Leakage Current I_R @ V_R	
		Min.	Nom.	Max.	(μA)	(μA)	(V)
MM1Z4689 Series, 0.5 W, Case Type : SOD-123							
MM1Z4689	**BX**	4.85	5.1	5.36	50	10	3.0
MM1Z4690	**BY**	5.32	5.6	5.88	50	10	4.0
MM1Z4691	**BZ**	5.89	6.2	6.51	50	10	5.0
MM1Z4692	**CA**	6.46	6.8	7.14	50	10	5.1
MM1Z4693	**CB**	7.13	7.5	7.88	50	10	5.7
MM1Z4694	**CC**	7.79	8.2	8.61	50	1.0	6.2
MM1Z4696	**CE**	8.65	9.1	9.56	50	1.0	6.9
MM1Z4697	**CF**	9.50	10	10.50	50	1.0	7.6
MM1Z4698	**CH**	10.45	11	11.50	50	0.05	8.4
MM1Z4699	**CJ**	11.40	12	12.60	50	0.05	9.1
MM1Z4700	**CK**	12.35	13	13.65	50	0.05	9.8
MM1Z4702	**CN**	14.25	15	15.75	50	0.05	11.4
MM1Z4703	**CP**	15.20	16	16.80	50	0.05	12.1
MM1Z4705	**CX**	17.10	18	18.90	50	0.05	13.6
MM1Z4707	**CZ**	19.00	20	21.00	50	0.01	15.2
MM1Z4708	**DA**	20.90	22	23.10	50	0.01	16.7
MM1Z4709	**DB**	22.80	24	25.20	50	0.01	18.2
MM1Z4711	**DD**	25.65	27	28.35	50	0.01	20.4
MM1Z4713	**DF**	28.50	30	31.50	50	0.01	22.8
MM1Z4714	**DH**	31.35	33	34.65	50	0.01	25.0
MM1Z4715	**DJ**	34.20	36	37.80	50	0.01	27.3
MM1Z4716	**DK**	37.05	39	40.95	50	0.01	29.6
MM1Z4717	**DM**	40.85	43	45.15	50	0.01	32.6



Notes :

(1) Tested with pulses tp = 20 ms

Zener Diodes 0.50 W

The plastic material carries U/L recognition 94V-0.

Type No.	Marking	Zener Voltage			Test Current	Maximum Zener Impedance		Test Current	Maximum Reverse Leakage Current	
		V_Z @ I_{ZT} (V)			I_{ZT}	Z_{ZT} @ I_{ZT}	Z_{ZK} @ I_{ZK}	I_{ZK}	I_R @ V_R	
		Min.	Nom.	Max.	(mA)	(Ω)	(Ω)	(mA)	(μA)	(V)
MM1Z5221B Series, 0.5 W, Case Type : SOD-123										
MM1Z5221B	**A4**	2.28	2.4	2.52	20	30	1200	0.25	100	1.0
MM1Z5223B	**B4**	2.57	2.7	2.84	20	30	1300	0.25	75	1.0
MM1Z5225B	**C4**	2.85	3.0	3.15	20	29	1600	0.25	50	1.0
MM1Z5226B	**D4**	3.14	3.3	3.47	20	28	1600	0.25	25	1.0
MM1Z5227B	**E4**	3.42	3.6	3.78	20	24	1700	0.25	15	1.0
MM1Z5228B	**F4**	3.71	3.9	4.10	20	23	1900	0.25	10	1.0
MM1Z5229B	**H4**	4.09	4.3	4.52	20	22	2000	0.25	5	1.0
MM1Z5230B	**J4**	4.47	4.7	4.94	20	19	1900	0.25	5	2.0
MM1Z5231B	**K4**	4.85	5.1	5.36	20	17	1600	0.25	5	2.0
MM1Z5232B	**M4**	5.32	5.6	5.88	20	11	1600	0.25	5	3.0
MM1Z5234B	**N4**	5.89	6.2	6.51	20	7	1000	0.25	5	4.0
MM1Z5235B	**P4**	6.46	6.8	7.14	20	5	750	0.25	3	5.0
MM1Z5236B	**R4**	7.13	7.5	7.88	20	6	500	0.25	3	6.0
MM1Z5237B	**X4**	7.79	8.2	8.61	20	8	500	0.25	3	6.5
MM1Z5239B	**Y4**	8.65	9.1	9.56	20	10	600	0.25	3	7.0
MM1Z5240B	**Z4**	9.50	10	10.50	20	17	600	0.25	3	8.0
MM1Z5241B	**A5**	10.45	11	11.50	20	22	600	0.25	2	8.4
MM1Z5242B	**B5**	11.40	12	12.60	20	30	600	0.25	1	9.1
MM1Z5243B	**C5**	12.35	13	13.65	9.5	13	600	0.25	0.5	9.9
MM1Z5245B	**D5**	14.25	15	15.75	8.5	16	600	0.25	0.1	11
MM1Z5246B	**E5**	15.20	16	16.80	7.8	17	600	0.25	0.1	12
MM1Z5248B	**F5**	17.10	18	18.90	7.0	21	600	0.25	0.1	14
MM1Z5249B	**K9**	18.05	19	19.95	6.6	23	600	0.25	0.1	14
MM1Z5250B	**H5**	19.00	20	21.00	6.2	25	600	0.25	0.1	15
MM1Z5251B	**J5**	20.90	22	23.10	5.6	29	600	0.25	0.1	17
MM1Z5252B	**K5**	22.80	24	25.20	5.2	33	600	0.25	0.1	18
MM1Z5253B	**M9**	23.75	25	26.25	5.0	35	600	0.25	0.1	19
MM1Z5254B	**M5**	25.65	27	28.35	4.6	41	600	0.25	0.1	21
MM1Z5256B	**N5**	28.50	30	31.50	4.2	49	600	0.25	0.1	23
MM1Z5257B	**P5**	31.35	33	34.65	3.8	58	700	0.25	0.1	25
MM1Z5258B	**R5**	34.20	36	37.80	3.4	70	700	0.25	0.1	27
MM1Z5259B	**X5**	37.05	39	40.95	3.2	80	800	0.25	0.1	30
MM1Z5260B	**Y5**	40.85	43	45.15	3.0	93	900	0.25	0.1	33
MM1Z5261B	**Z5**	44.65	47	49.35	2.7	105	1000	0.25	0.1	36
MM1Z5262B	**A6**	48.45	51	53.55	2.5	125	1100	0.25	0.1	39
MM1Z5263B	**B6**	53.20	56	58.80	2.2	150	1300	0.25	0.1	43
MM1Z5265B	**C6**	58.90	62	65.10	2.0	185	1400	0.25	0.1	47
MM1Z5266B	**D6**	64.60	68	71.40	1.8	230	1600	0.25	0.1	52
MM1Z5267B	**E6**	71.25	75	78.75	1.7	270	1700	0.25	0.1	56



Notes: (1) V_Z is tested with pulses (20 ms)

(2) Nominal Zener voltage is measured with the device junction in thermal equilibrium at T_L = 30 °C ±1 °C

(3) Z_{ZT} and Z_{ZK} are measured by divice drop across the device by the AC current appliced.

The specified limits are for $I_{Z(AC)}$ = 0.1 $I_{Z(DC)}$ with the AC frequency 1 KHz

Zener Diodes 0.50 W

Type No.		Zener Voltage V_Z @ I_{ZT} (1)												Test Current	Maximum Zener Impedance			Maximum Reverse Current	
		Suffix A (2)			Suffix B (2)			Suffix C (2)			Suffix D								
		Min.	Nom.	Max.	Min.	Nom.	Max.	Min.	Nom.	Max.	Min.	Nom.	Max.	I_{ZT}	Z_{ZT} @ I_{ZT}	Z_{Zk} @ I_{ZK}	I_{ZK}	I_R @	V_R
Axial Lead	SMD	(V)	(V)	(V)	(V)	(V)	(V)	(V)	(V)	(V)	(V)	(V)	(V)	(mA)	(Ω)	(Ω)	(mA)	(μA)	(V)

MTZJ / MMZJ Series, Case Type : DO-34 / Mini MELF



MTZJ2.0	**MMZJ2.0**	1.89	2.00	2.11	2.02	2.11	2.20	-	-	-	-	-	-	5	100	1000	0.5	120	0.5
MTZJ2.2	**MMZJ2.2**	2.11	2.20	2.29	2.22	2.32	2.42	-	-	-	-	-	-	5	100	1000	0.5	120	0.7
MTZJ2.4	**MMZJ2.4**	2.34	2.44	2.54	2.43	2.53	2.63	-	-	-	-	-	-	5	100	1000	0.5	120	1.0
MTZJ2.7	**MMZJ2.7**	2.54	2.65	2.76	2.69	2.8	2.91	-	-	-				5	100	1000	0.5	100	1.0
MTZJ3.0	**MMZJ3.0**	2.85	2.96	3.07	3.01	3.12	3.23	-	-	-	-	-	-	5	120	1000	0.5	50	1.0
MTZJ3.3	**MMZJ3.3**	3.16	3.27	3.38	3.32	3.43	3.54	-	-	-	-	-	-	5	120	1000	0.5	20	1.0
MTZJ3.6	**MMZJ3.6**	3.45	3.58	3.70	3.60	3.72	3.845	-	-	-	-	-	-	5	100	1000	1.0	10	1.0
MTZJ3.9	**MMZJ3.9**	3.74	3.88	4.01	3.89	4.03	4.16	-	-	-	-	-	-	5	100	1000	1.0	5	1.0
MTZJ4.3	**MMZJ4.3**	4.04	4.17	4.29	4.17	4.30	4.43	-	-	-	-	-	-	5	100	1000	1.0	5	1.0
MTZJ4.7	**MMZJ4.7**	4.44	4.56	4.67	4.55	4.68	4.80	-	-	-	-	-	-	5	80	900	0.5	5	1.0
MTZJ5.1	**MMZJ5.1**	4.81	4.94	5.06	4.94	5.07	5.20	5.08	5.23	5.37	-	-	-	5	70	1200	1.0	5	1.5
MTZJ5.6	**MMZJ5.6**	5.11	5.42	5.55	5.45	5.59	5.72	5.61	5.76	5.90	-	-	-	5	40	900	1.0	5	2.5
MTZJ6.2	**MMZJ6.2**	5.78	5.94	6.09	5.96	6.12	6.27	6.12	6.28	6.43	-	-	-	5	30	500	1.0	5	3.0
MTZJ6.8	**MMZJ6.8**	6.33	6.46	6.62	6.49	6.66	6.82	6.66	6.84	7.01	-	-	-	5	20	150	0.5	2	3.5
MTZJ7.5	**MMZJ7.5**	6.85	7.04	7.22	7.07	7.26	7.44	7.29	7.48	7.66	-	-	-	5	20	120	0.5	0.5	4.0
MTZJ8.2	**MMZJ8.2**	7.53	7.73	7.92	7.79	8.00	8.20	8.03	8.24	8.44	-	-	-	5	20	120	0.5	0.5	5.0
MTZJ9.1	**MMZJ9.1**	8.28	8.51	8.73	8.57	8.79	9.00	8.83	9.07	9.30	-	-	-	5	20	120	0.5	0.5	6.0
MTZJ10	**MMZJ10**	9.13	9.36	9.59	9.41	9.66	9.90	9.70	9.95	10.19	9.94	10.20	10.45	5	20	120	0.5	0.2	7.0
MTZJ11	**MMZJ11**	10.14	10.40	10.66	10.53	10.80	11.07	10.82	11.10	11.37	-	-	-	5	20	120	0.5	0.2	8.0
MTZJ12	**MMZJ12**	11.11	11.40	11.68	11.40	11.70	11.99	11.70	12.00	12.30	-	-	-	5	25	110	0.5	0.2	9.0
MTZJ13	**MMZJ13**	12.07	12.40	12.72	12.56	12.90	13.23	12.96	13.30	13.63	-	-	-	5	25	110	0.5	0.2	10
MTZJ15	**MMZJ15**	13.45	13.80	14.14	13.92	14.30	14.67	14.33	14.70	15.06	-	-	-	5	25	110	0.5	0.2	11
MTZJ16	**MMZJ16**	14.82	15.20	15.58	15.21	15.60	15.99	15.69	16.10	16.50	-	-	-	5	25	150	0.5	0.2	12
MTZJ18	**MMZJ18**	16.19	16.60	17.02	16.87	17.30	17.73	17.39	17.80	18.21	-	-	-	5	30	150	0.5	0.2	13
MTZJ20	**MMZJ20**	18.04	18.50	18.96	18.62	19.10	19.58	19.21	19.70	20.19	19.70	20.20	20.71	5	30	200	0.5	0.2	15
MTZJ22	**MMZJ22**	20.18	20.70	21.22	20.67	21.20	21.73	21.06	21.60	22.14	21.55	22.10	22.65	5	30	200	0.5	0.2	17
MTZJ24	**MMZJ24**	22.04	22.60	23.17	22.62	23.20	23.78	23.11	23.70	24.29	23.60	24.20	24.81	5	35	200	0.5	0.2	19
MTZJ27	**MMZJ27**	24.28	24.90	25.52	24.96	25.60	26.24	26.33	27.00	27.68	26.54	27.00	27.46	5	45	250	0.5	0.2	21
MTZJ30	**MMZJ30**	27.01	27.70	28.39	27.69	28.40	29.11	28.37	29.10	29.83	29.06	29.80	30.55	5	55	250	0.5	0.2	23
MTZJ33	**MMZJ33**	29.64	30.40	31.16	30.32	31.10	31.88	30.91	31.70	32.49	31.49	32.30	33.11	5	65	250	0.5	0.2	25
MTZJ36	**MMZJ36**	32.18	33.00	33.83	32.76	33.60	34.44	33.44	34.30	35.16	34.03	34.90	35.77	5	75	250	0.5	0.2	27
MTZJ39	**MMZJ39**	34.71	35.60	36.49	35.47	36.30	37.13	35.98	36.90	37.82	36.66	37.60	38.54	5	85	250	0.5	0.2	30

Note :

(1) The Zener voltage is measured 40ms after power is supplied

(2) When placing an order for an MTZJ or MMZJ type, please add suffix e.g. MTZJ2.0A, MTZJ2.0B…..MMZJ39C

Zener Diodes 0.50 W

The plastic material carries U/L recognition 94V-0.

Type Number	Zener Voltage V_Z @ I_{ZT}				Maximum Zener Impedance			Max. Reverse Leakage Current		Temp. coefficient of Zener Voltage	Admissible Zener Current
	Nom.	Min	Max	I_{ZT}	Z_{ZT} @ I_{ZT}	Z_{Zk} @ I_{ZK}	I_{ZK}	I_R	at V_R	TK_{VZ}	
	(V)	(V)	(V)	(mA)	(Ω)	(Ω)	(mA)	(μA)	(V)	(% / K)	I_{ZM} (mA)
MZ55C Series, 0.5 W, Case Type : M1A											
MZ55C3V0	3.0	2.8	3.2	5.0	85	600	1.0	4.0	1.0	-0.08...-0.05	125
MZ55C3V3	3.3	3.1	3.5	5.0	85	600	1.0	2.0	1.0	-0.08...-0.05	115
MZ55C3V6	3.6	3.4	3.8	5.0	85	600	1.0	2.0	1.0	-0.08...-0.05	105
MZ55C3V9	3.9	3.7	4.1	5.0	85	600	1.0	2.0	1.0	-0.08...-0.05	95
MZ55C4V3	4.3	4.0	4.6	5.0	75	600	1.0	1.0	1.0	-0.06...-0.03	90
MZ55C4V7	4.7	4.4	5.0	5.0	60	600	1.0	1.0	1.0	-0.05...+0.02	85
MZ55C5V1	5.1	4.8	5.4	5.0	35	550	1.0	1.0	1.0	-0.02...+0.02	80
MZ55C5V6	5.6	5.2	6.0	5.0	25	450	1.0	1.0	1.0	-0.05...+0.05	70
MZ55C6V2	6.2	5.8	6.6	5.0	10	200	1.0	1.0	2.0	0.03...0.06	64
MZ55C6V8	6.8	6.4	7.2	5.0	8	150	1.0	1.0	3.0	0.03...0.07	58
MZ55C7V5	7.5	7.0	7.9	5.0	7	50	1.0	1.0	5.0	0.03...0.07	53
MZ55C8V2	8.2	7.7	8.7	5.0	7	50	1.0	1.0	6.2	0.03...0.08	47
MZ55C9V1	9.1	8.5	9.6	5.0	10	50	1.0	1.0	6.8	0.03...0.09	43
MZ55C10	10	9.4	10.6	5.0	15	70	1.0	1.0	7.5	0.03...0.10	40
MZ55C11	11	10.4	11.6	5.0	20	70	1.0	1.0	8.2	0.03...0.11	36
MZ55C12	12	11.4	12.7	5.0	20	90	1.0	1.0	9.1	0.03...0.11	32
MZ55C13	13	12.4	14.1	5.0	26	110	1.0	1.0	10.0	0.03...0.11	29
MZ55C14	14	13.1	15.0	5.0	28	110	1.0	1.0	10.5	0.03...0.11	28
MZ55C15	15	13.8	15.6	5.0	30	110	1.0	1.0	11	0.03...0.11	27
MZ55C16	16	15.3	17.1	5.0	40	170	1.0	1.0	12	0.03...0.11	24
MZ55C18	18	16.8	19.1	5.0	50	170	1.0	1.0	13	0.03...0.11	21
MZ55C20	20	18.8	21.2	5.0	55	220	1.0	1.0	15	0.03...0.11	20
MZ55C22	22	20.8	23.3	5.0	55	220	1.0	1.0	16	0.04...0.12	18
MZ55C24	24	22.8	25.6	5.0	80	220	1.0	1.0	18	0.04...0.12	16
MZ55C27	27	25.1	28.9	5.0	80	220	1.0	1.0	20	0.04...0.12	14
MZ55C30	30	28	32	5.0	80	220	1.0	1.0	22	0.04...0.12	13
MZ55C33	33	31	35	5.0	80	220	1.0	1.0	24	0.04...0.12	12
MZ55C36	36	34	38	5.0	80	220	1.0	1.0	27	0.04...0.12	11
MZ55C39	39	37	41	2.5	90	500	0.5	1.0	30	0.04...0.12	10
MZ55C43	43	40	46	2.5	90	500	0.5	1.0	33	0.04...0.12	9.2
MZ55C47	47	44	50	2.5	110	600	0.5	1.0	36	0.04...0.12	8.5
MZ55C51	51	48	54	2.5	125	700	0.5	1.0	39	0.04...0.12	7.8
MZ55C56	56	52	60	2.5	135	700	0.5	1.0	43	0.04...0.12	7.0
MZ55C62	62	58	66	2.5	150	1000	0.5	1.0	47	0.04...0.12	6.4
MZ55C68	68	64	72	2.5	200	1000	0.5	1.0	51	0.04...0.12	5.9
MZ55C75	75	70	79	2.5	250	1000	0.5	1.0	56	0.04...0.12	5.3
MZ55C82	82	77	87	2.5	300	1500	0.5	1.0	62	0.05...0.12	4.8
MZ55C91	91	85	96	1.0	450	2000	0.5	1.0	68	0.05...0.12	4.4
MZ55C100	100	94	106	1.0	450	5000	0.5	1.0	75	0.05...0.12	4.0
MZ55C110	110	104	116	1.0	600	5000	0.5	1.0	82	0.05...0.12	3.6
MZ55C120	120	114	127	1.0	800	5500	0.5	1.0	91	0.05...0.12	3.3
MZ55C130	130	124	141	1.0	950	6000	0.5	1.0	100	0.05...0.12	3.1
MZ55C150	150	138	156	1.0	1250	6500	0.5	1.0	110	0.05...0.12	3.7
MZ55C160	160	153	171	1.0	1400	7000	0.5	1.0	120	0.05...0.12	2.5
MZ55C180	180	168	191	1.0	1700	8500	0.5	1.0	130	0.05...0.12	2.2
MZ55C190	190	180	199	1.0	1850	9500	0.5	1.0	140	0.05...0.12	2.1
MZ55C200	200	188	212	1.0	2000	10000	0.5	1.0	150	0.05...0.12	2.0

Note :

(1) The type number listed have a standard tolerance on the nominal zener voltage of ± 5.0%.
For ± 2% tolerance altered the fifth letter of type from "C" to be "B"

Zener Diodes 0.50 W

Type No.	Suffix (2)	Zener Voltage (1) V_Z (V)			Dynamic Impedance $Z_Z(\Omega)$		Knee Dynamic Impedance $Z_{ZK}(\Omega)$		Reverse Current $I_R(\mu A)$		Zener Voltage Temperature γz(mV/°C)	
		Min.	Max.	I_Z (mA)	Max.	Iz (mA)	Max.	Iz (mA)	Max.	V_R (V)	Max.	Iz (mA)
RD2.0E Series, 0.5 W, Case Type : DO-35												
RD2.0E	**B**	1.88	2.20	20	140	20	2000	1.0	120	0.5	-1.0	20
	B1	1.88	2.10									
	B2	2.02	2.20									
RD2.2E	**B**	2.12	2.41	20	120	20	2000	1.0	120	0.7	-1.5	20
	B1	2.12	2.3									
	B2	2.22	2.41									
RD2.4E	**B**	2.33	2.63	20	100	20	2000	1.0	120	1.0	-1.5	20
	B1	2.33	2.52									
	B2	2.43	2.63									
RD2.7E	**B**	2.54	2.91	20	100	20	1000	1.0	100	1.0	-1.5	20
	B1	2.54	2.75									
	B2	2.69	2.91									
RD3.0E	**B**	2.85	3.22	20	80	20	1000	1.0	50	1.0	-2.0	20
	B1	2.85	3.07									
	B2	3.01	3.22									
RD3.3E	**B**	3.16	3.53	20	70	20	1000	1.0	20	1.0	-2.0	20
	B1	3.16	3.38									
	B2	3.32	3.53									
RD3.6E	**B**	3.47	3.83	20	60	20	1000	1.0	10	1.0	-2.0	20
	B1	3.47	3.68									
	B2	3.62	3.83									
RD3.9E	**B**	3.77	4.14	20	50	20	1000	1.0	5.0	1.0	-2.0	20
	B1	3.77	3.98									
	B2	3.92	4.14									
RD4.3E	**B**	4.05	4.53	20	40	20	1000	1.0	5.0	1.0	-1.5	20
	B1	4.05	4.26									
	B2	4.20	4.40									
	B3	4.34	4.53									
RD4.7E	**B**	4.47	4.91	20	25	20	900	1.0	5.0	1.0	-1.5	20
	B1	4.47	4.65									
	B2	4.59	4.77									
	B3	4.71	4.91									
RD5.1E	**B**	4.85	5.35	20	20	20	800	1.0	5.0	1.5	0.5	20
	B1	4.85	5.03									
	B2	4.97	5.18									
	B3	5.12	5.35									
RD5.6E	**B**	5.29	5.88	20	13	20	500	1.0	5.0	2.5	1.5	20
	B1	5.29	5.52									
	B2	5.46	5.70									
	B3	5.64	5.88									
RD6.2E	**B**	5.81	6.40	20	10	20	300	1.0	5.0	3.0	2.0	20
	B1	5.81	6.06									
	B2	5.99	6.24									
	B3	6.16	6.40									



Zener Diodes 0.50 W

Type No.	Suffix (2)	Zener Voltage (1) V_Z (V)			Dynamic Impedance $Z_Z(\Omega)$		Knee Dynamic Impedance $Z_{ZK}(\Omega)$		Reverse Current $I_R(\mu A)$		Zener Voltage Temperature γz(mV/°C)	
		Min.	Max.	I_Z (mA)	Max.	Iz (mA)	Max.	Iz (mA)	Max.	V_R (V)	Max.	Iz (mA)
RD2.0E Series, 0.5 W, Case Type : DO-35												
RD6.8E	**B**	6.32	6.97	20	8	20	150	0.5	2.0	3.5	2.5	20
	B1	6.32	6.59									
	B2	6.52	6.79									
	B3	6.70	6.97									
RD7.5E	**B**	6.88	7.64	20	8	20	120	0.5	0.5	4.0	3.0	20
	B1	6.88	7.19									
	B2	7.11	7.41									
	B3	7.33	7.64									
RD8.2E	**B**	7.56	8.41	20	8	20	120	0.5	0.5	5.0	4.0	20
	B1	7.56	7.90									
	B2	7.82	8.15									
	B3	8.07	8.41									
RD9.1E	**B**	8.33	9.29	20	8	20	120	0.5	0.5	6.0	4.5	20
	B1	8.33	8.70									
	B2	8.61	8.99									
	B3	8.89	9.29									
RD10E	**B**	9.19	10.30	20	8	20	120	0.5	0.2	7.0	5.5	20
	B1	9.19	9.59									
	B2	9.48	9.90									
	B3	9.82	10.30									
RD11E	**B**	10.18	11.26	10	10	10	120	0.5	0.2	8.0	6.5	10
	B1	10.18	10.63									
	B2	10.50	10.95									
	B3	10.82	11.26									
RD12E	**B**	11.13	12.30	10	12	10	110	0.5	0.2	9.0	7.5	10
	B1	11.13	11.63									
	B2	11.50	11.92									
	B3	11.80	12.30									
RD13E	**B**	12.18	13.62	10	14	10	110	0.5	0.2	10	8.5	10
	B1	12.18	12.71									
	B2	12.59	13.16									
	B3	13.03	13.62									
RD15E	**B**	13.48	15.02	10	16	10	110	0.5	0.2	11	10	10
	B1	13.48	14.09									
	B2	13.95	14.56									
	B3	14.40	15.02									
RD16E	**B**	14.87	16.50	10	18	10	150	0.5	0.2	12	11	10
	B1	14.87	15.50									
	B2	13.55	15.93									
	B3	15.79	16.50									
RD18E	**B**	16.34	18.30	10	23	10	150	0.5	0.2	13	13	10
	B1	16.34	17.06									
	B2	16.90	17.67									
	B3	17.51	18.30									



Zener Diodes 0.50 W

Type No.	Suffix (2)	Zener Voltage (1) V_Z (V)			Dynamic Impedance $Z_Z(\Omega)$		Knee Dynamic Impedance $Z_{ZK}(\Omega)$		Reverse Current $I_R(\mu A)$		Zener Voltage Temperature γz(mV/°C)	
		Min.	Max.	I_Z (mA)	Max.	Iz (mA)	Max.	Iz (mA)	Max.	V_R (V)	Max.	Iz (mA)
RD2.0E Series, 0.5 W, Case Type : DO-35												
RD20E	**B**	18.11	20.72	10	28	10	200	0.5	0.2	15	15	10
	B1	18.11	18.92									
	B2	18.73	19.57									
	B3	19.38	20.22									
	B4	19.88	20.72									
RD22E	**B**	20.23	22.61	5	30	5	200	0.5	0.2	17	17	5.0
	B1	20.23	21.08									
	B2	20.76	21.65									
	B3	21.22	22.09									
	B4	21.68	22.61									
RD24E	**B**	22.26	24.81	5	35	5	200	0.5	0.2	19	19	5.0
	B1	22.26	23.12									
	B2	22.75	23.75									
	B3	23.29	24.27									
	B4	23.81	24.81									
RD27E	**B**	24.26	27.64	5	45	5	250	0.5	0.2	21	21	5.0
	B1	24.26	25.52									
	B2	24.97	26.26									
	B3	25.63	26.95									
	B4	26.29	27.64									
RD30E	**B**	26.99	30.51	5	55	5	250	0.5	0.2	23	24	5.0
	B1	26.99	28.39									
	B2	27.70	29.13									
	B3	28.36	29.82									
	B4	29.02	30.51									
RD33E	**B**	29.63	33.11	5	65	5	250	0.5	0.2	25	26	5.0
	B1	29.68	31.22									
	B2	30.32	31.88									
	B3	30.90	32.50									
	B4	31.49	33.11									
RD36E	**B**	32.14	35.77	5	75	5	250	0.5	0.2	27	29	5.0
	B1	32.14	33.79									
	B2	32.79	34.49									
	B3	33.40	35.13									
	B4	34.01	35.77									
RD39E	**B**	34.68	40.80	5	85	5	250	0.5	0.2	30	32	5.0
	B1	34.68	36.47									
	B2	35.36	37.19									
	B3	36.00	37.85									
	B4	36.63	38.52									



Notes:

(1) The zener voltage (Vz) is tested for 40 ms after power is supplied

(2) When placing an order for an RD2.0E type, please add suffix e.g. RD2.0EB, RD2.0EB1 ….. RD39EB4
The B grade is a wide specification, covering full voltage range for suffix "B1" to "B4"

Zener Diodes 0.50 W

Type No.	Zener Voltage V_Z @ I_{ZT} (1)		Test Current	Maximum Zener Impedance			Maximum Reverse Current At VR	
	Min.	Max.	I_{ZT}	Z_{ZT} @ I_{ZT}	Z_{Zk} @ I_{ZK}	I_{ZK}	I_R	V_R
	(V)	(V)	(mA)	(Ω)	(Ω)	(mA)	(μA)	(V)
RLZ Series, Case Type : MiniMELF								
RLZ3.6B	3.60	3.85	20	60	1000	1.0	10	1.0
RLZ3.9B	3.89	4.16	20	50	1000	1.0	5	1.0
RLZ4.3B	4.17	4.43	20	40	1000	1.0	5	1.0
RLZ4.7B	4.55	4.80	20	25	900	1.0	5	1.0
RLZ5.1B	4.94	5.20	20	20	800	1.0	5	1.5
RLZ5.6B	5.45	5.73	20	13	500	1.0	5	2.5
RLZ6.2B	5.96	6.27	20	10	300	1.0	5	3.0
RLZ6.8B	6.49	6.83	20	8	150	0.5	2	3.5
RLZ7.5B	7.07	7.45	20	8	120	0.5	0.5	4.0
RLZ8.2B	7.78	8.19	20	8	120	0.5	0.5	5.0
RLZ9.1B	8.57	9.01	20	8	120	0.5	0.5	6.0
RLZ10B	9.41	9.90	20	8	120	0.5	0.2	7.0
RLZ11B	10.50	11.05	10	10	120	0.5	0.2	8.0
RLZ12B	11.44	12.03	10	12	110	0.5	0.2	9.0
RLZ13B	12.55	13.21	10	14	110	0.5	0.2	10
RLZ15B	13.89	14.62	10	16	110	0.5	0.2	11
RLZ16B	15.25	16.04	10	18	150	0.5	0.2	12
RLZ18B	16.82	17.70	10	23	150	0.5	0.2	13
RLZ20B	18.63	19.59	10	28	200	0.5	0.2	15
RLZ22B	20.64	21.71	5	30	200	0.5	0.2	17
RLZ24B	22.61	23.77	5	35	200	0.5	0.2	19
RLZ27B	24.97	26.26	5	45	250	0.5	0.2	21
RLZ30B	27.70	29.13	5	55	250	0.5	0.2	23
RLZ33B	30.32	31.88	5	65	250	0.5	0.2	25
RLZ36B	32.79	34.49	5	75	250	0.5	0.2	27
RLZ39B	35.36	37.19	5	85	250	0.5	0.2	30

Note :

(1) The Zener voltage is measured 40ms after power is supplied

Zener Diodes 0.50 W

Type	Zener Voltage V_Z @ I_{ZT}			Maximum Zener Impedance			Maximum Reverse Leakage Current			Temp. coefficient of Zener Voltage
	Nom	I_{ZT}	V_{ZT}	Z_{ZT} @ I_{ZT}	Z_{Zk} @ I_{ZK}	I_{ZK}	I_R	I_R (2)	at V_R	α_{vz}(% / K)
	(V)	(mA)	(V)(1)	(Ω)	(Ω)	(mA)	(μA)	(μA)	(V)	
TZMC Series, 0.5 W, Case Type : Mini MELF										
TZMC2V4	2.4	5	2.28 to 2.56	< 85	< 600	1.0	< 50	< 100	1.0	-0.09...-0.06
TZMC2V7	2.7	5	2.5 to 2.9	< 85	< 600	1.0	< 10	< 50	1.0	-0.09...-0.06
TZMC3V0	3.0	5	2.8 to 3.2	< 90	< 600	1.0	< 4	< 40	1.0	-0.08...-0.05
TZMC3V3	3.3	5	3.1 to 3.5	< 90	< 600	1.0	< 2	< 40	1.0	-0.08...-0.05
TZMC3V6	3.6	5	3.4 to 3.8	< 90	< 600	1.0	< 2	< 40	1.0	-0.08...-0.05
TZMC3V9	3.9	5	3.7 to 4.1	< 90	< 600	1.0	< 2	< 40	1.0	-0.08...-0.05
TZMC4V3	4.3	5	4.0 to 4.6	< 90	< 600	1.0	< 1	< 20	1.0	-0.06...-0.03
TZMC4V7	4.7	5	4.4 to 5.0	< 80	< 600	1.0	< 0.5	< 10	1.0	-0.05...-0.02
TZMC5V1	5.1	5	4.8 to 5.4	< 60	< 550	1.0	< 0.1	< 2	1.0	-0.02...+0.02
TZMC5V6	5.6	5	5.2 to6.0	< 40	< 450	1.0	< 0.1	< 2	1.0	-0.05...+0.05
TZMC6V2	6.2	5	5.8 to 6.6	< 10	< 200	1.0	< 0.1	< 2	2.0	-0.03...+0.06
TZMC6V8	6.8	5	6.4 to 7.2	< 8	< 150	1.0	< 0.1	< 2	3.0	0.03...0.07
TZMC7V5	7.5	5	7.0 to 7.9	< 7	< 50	1.0	< 0.1	< 2	5.0	0.03...0.07
TZMC8V2	8.2	5	7.7 to8.7	< 7	< 50	1.0	< 0.1	< 2	6.2	0.03...0.08
TZMC9V1	9.1	5	8.5 to 9.6	< 10	< 50	1.0	< 0.1	< 2	6.8	0.03...0.09
TZMC10	10	5	9.4 to 10.6	< 15	< 70	1.0	< 0.1	< 2	7.5	0.03...0.10
TZMC11	11	5	10.4 to 11.6	< 20	< 70	1.0	< 0.1	< 2	8.2	0.03...0.11
TZMC12	12	5	11.4 to 12.7	< 20	< 90	1.0	< 0.1	< 2	9.1	0.03...0.11
TZMC13	13	5	12.4 to 14.1	< 26	< 110	1.0	< 0.1	< 2	10	0.03...0.11
TZMC15	15	5	13.8 to 15.6	< 30	< 110	1.0	< 0.1	< 2	11	0.03...0.11
TZMC16	16	5	15.3 to 17.1	< 40	< 170	1.0	< 0.1	< 2	12	0.03...0.11
TZMC18	18	5	16.8 to 19.1	< 50	< 170	1.0	< 0.1	< 2	13	0.03...0.11
TZMC20	20	5	18.8 to 21.2	< 55	< 220	1.0	< 0.1	< 2	15	0.03...0.11
TZMC22	22	5	20.8 to 23.3	< 55	< 220	1.0	< 0.1	< 2	16	0.04...0.12
TZMC24	24	5	22.8 to 25.6	< 80	< 220	1.0	< 0.1	< 2	18	0.04...0.12
TZMC27	27	5	25.1 to 28.9	< 80	< 220	1.0	< 0.1	< 2	20	0.04...0.12
TZMC30	30	5	28 to 32	< 80	< 220	1.0	< 0.1	< 2	22	0.04...0.12
TZMC33	33	5	31 to 35	< 80	< 220	1.0	< 0.1	< 2	24	0.04...0.12
TZMC36	36	5	34 to 38	< 80	< 220	1.0	< 0.1	< 2	27	0.04...0.12
TZMC39	39	2.5	37 to 41	< 90	< 500	1.0	< 0.1	< 5	30	0.04...0.12
TZMC43	43	2.5	40 to 46	< 90	< 600	0.5	< 0.1	< 5	33	0.04...0.12
TZMC47	47	2.5	44 to 50	< 110	< 700	0.5	< 0.1	< 5	36	0.04...0.12
TZMC51	51	2.5	48 to 54	< 125	< 700	0.5	< 0.1	< 10	39	0.04...0.12
TZMC56	56	2.5	52 to 60	< 135	< 1000	0.5	< 0.1	< 10	43	0.04...0.12
TZMC62	62	2.5	58 to 66	< 150	< 1000	0.5	< 0.1	< 10	47	0.04...0.12
TZMC68	68	2.5	64 to 72	< 200	< 1000	0.5	< 0.1	< 10	51	0.04...0.12
TZMC75	75	2.5	70 to 79	< 250	< 1500	0.5	< 0.1	< 10	56	0.04...0.12

Notes :

(1) Tighter tolerances are available on request:

TZMA… ± 1% of Vznom

TZMB…± 2% of Vznom

TZMF… ± 3% of Vznom

(2) At Tj = 150 ºC

Zener Diodes 0.50 W

Type No.	Zener Voltage V_Z @ I_{ZT}		Dynamic Resistance at I_Z = 5mA f = 1 kHz	Dynamic Resistance at I_Z = 1mA f = 1 kHz	Maximum Reverse Leakage Current I_R	at V_R	Temp. coefficient of Zener Voltage At I_{ZT} $\alpha_{vz}(10^{-4}$ / °C)		Admissible Zener Current (2) I_Z
	Nom(1)	I_{ZT}							
	(V)	(mA)	rzj (Ω)	rzj (Ω)	(μA)	(V)	min.	max.	(mA)
ZMM Series, 0.5 W, Case Type : Mini MELF									
ZMM2.4	2.4	5	< 100	< 600	50	0.8	-10	-5	175
ZMM2.7	2.7	5	75 (< 83)	< 500	20	0.8	-9	-4	160
ZMM3.0	3.0	5	80 (< 95)	< 500	10	0.8	-9	-3	140
ZMM3.3	3.3	5	80 (< 95)	< 500	6.0	0.8	-8	-3	130
ZMM3.6	3.6	5	80 (< 95)	< 500	6.0	0.8	-8	-3	120
ZMM3.9	3.9	5	80 (< 95)	< 500	1.6	0.8	-7	-3	110
ZMM4.3	4.3	5	80 (< 95)	< 500	1.0	0.8	-6	-1	100
ZMM4.7	4.7	5	70 (< 78)	< 500	0.1	0.8	-5	+2	90
ZMM5.1	5.1	5	30 (< 60)	< 480	0.1	0.8	-3	+4	80
ZMM5.6	5.6	5	10 (< 40)	< 400	0.1	1	-2	+6	70
ZMM6.2	6.2	5	4.8 (< 10)	< 200	0.1	2	-1	+7	64
ZMM6.8	6.8	5	4.5 (< 8)	< 150	0.1	3	+2	+7	58
ZMM7.5	7.5	5	4 (< 7)	< 50	0.1	5	+3	+7	53
ZMM8.2	8.2	5	4.5 (< 7)	< 50	0.1	6	+4	+7	47
ZMM9.1	9.1	5	4.8 (< 10)	< 50	0.1	7	+5	+8	43
ZMM10	10	5	5.2 (< 15)	< 70	0.1	7.5	+5	+8	40
ZMM11	11	5	6 (< 20)	< 70	0.1	8.5	+5	+9	36
ZMM12	12	5	7 (< 20)	< 90	0.1	9	+6	+9	32
ZMM13	13	5	9 (< 25)	< 110	0.1	10	+7	+9	29
ZMM15	15	5	11 (< 30)	< 110	0.1	11	+7	+9	27
ZMM16	16	5	13 (< 40)	< 170	0.1	12	+8	+9.5	24
ZMM18	18	5	18 (< 50)	< 170	0.1	14	+8	+9.5	21
ZMM20	20	5	20 (< 50)	< 220	0.1	15	+8	+10	20
ZMM22	22	5	25 (< 55)	< 220	0.1	17	+8	+10	18
ZMM24	24	5	28 (< 80)	< 220	0.1	18	+8	+10	16
ZMM27	27	5	30 (< 80)	< 250	0.1	20	+8	+10	14
ZMM30	30	5	35 (< 80)	< 250	0.1	22.5	+8	+10	13
ZMM33	33	5	40 (< 80)	< 250	0.1	25	+8	+10	12
ZMM36	36	5	40 (< 90)	< 250	0.1	27	+8	+10	11
ZMM39	39	5	50 (< 90)	< 300	0.1	29	+10	+12	10
ZMM43	43	5	60 (< 100)	< 700	0.1	32	+10	+12	9.2
ZMM47	47	5	70 (< 100)	< 750	0.1	35	+10	+12	8.5
ZMM51	51	5	70 (< 100)	< 750	0.1	38	+10	+12	7.8
ZMM56	56	2.5	< 135(3)	< 1000(4)	0.1	42	+10 (typ.)		7.1
ZMM62	62	2.5	< 150(3)	< 1000(4)	0.1	47	+ 10 (typ.)		6.4
ZMM68	68	2.5	< 200(3)	< 1000(4)	0.1	51	+ 10 (typ.)		5.8
ZMM75	75	2.5	< 250(3)	<1500(4)	0.1	55	+ 10 (typ.)		5.3

Notes:

(1) Tested with pulse tp = 5 ms

(2) Valid provided that leads are kept at ambient temperature

(3) At I_Z = 2.5mA

(4) At I_Z = 0.5mA

(5) Standard zener voltage tolerance is ± 5%. Other tolerances are available upon request

(6) V_F = 1.25 Vmax. @ I_F = 200 mA

Zener Diodes 0.50 W

The plastic material carries U/L recognition 94V-0.

Type No.	Nominal Zener Voltage	Test Current	Maximum Zener Impedance			Maximum Reverse Leakage Current		Maximum DC Zener Current	Maximum Surge Current
	V_Z @ I_{ZT}	I_{ZT}	Z_{ZT} @ I_{ZT}	Z_{ZK} @ I_{ZK}	I_{ZK}	I_R @ V_R		I_{ZM}	I_{RM} (2)
	(V)	(mA)		(Ω)	(mA)	(μA)	(V)	(mA)	(mApk)

Z043 Series, 0.5 W, Case Type : DO-41



Z043	43	2.75	70	1500	0.25	5.0	32	11.0	52
Z047	47	2.40	80	1500	0.25	5.0	35	9.6	47
Z051	51	2.23	95	1500	0.25	5.0	38	8.9	44
Z056	56	2.00	110	2000	0.25	5.0	42	8.0	40
Z062	62	1.83	125	2000	0.25	5.0	47	7.3	36
Z068	68	1.65	150	2000	0.25	5.0	52	6.6	33
Z075	75	1.50	175	2000	0.25	5.0	57	6.0	30
Z082	82	1.37	200	3000	0.25	5.0	62	5.5	27
Z091	91	1.25	250	3000	0.25	5.0	73	5.0	24
Z0100	100	1.12	350	3000	0.25	5.0	76	4.5	22
Z0110	110	1.00	450	4000	0.25	5.0	83	4.1	20
Z0120	120	0.95	550	4500	0.25	5.0	91	3.8	18
Z0130	130	0.88	700	5000	0.25	5.0	98	3.5	17
Z0150	150	0.75	1000	6000	0.25	5.0	114	3.0	15
Z0160	160	0.70	1100	6500	0.25	5.0	121	2.8	14
Z0180	180	0.62	1400	7000	0.25	5.0	136	2.5	12.5
Z0190	190	0.57	1400	7500	0.25	5.0	144	2.3	11.8
Z0200	200	0.55	1700	8000	0.25	5.0	152	2.2	11.2

Notes :

(1) The type numbers listed have a standard tolerance on the nominal zener voltage of ± 10%
Add suffix "A" for ± 5% tolerance, add suffix "B" for ± 2% tolerance

(2) Surge current is a non-repetitive 8.3ms square pulse width wave or equivalent sine-wave superimposed on I_{ZT} as per JEDEC method

Zener Diodes 0.50 W

Type No.	Zener Voltage V_Z @ I_{ZT}		Dynamic Resistance at I_Z=5mA	Dynamic Resistance at I_Z=1mA	Reverse Voltage	Temp. coefficient of Zener Voltage At I_{ZT}		Admissible Zener Current (2)
	Nom(1)	I_{ZT}	f = 1 kHz	f = 1 kHz	at I_R = 100 nA	α_{vz}(10^{-4} / °C)		I_Z
	(V)	(mA)	rzj (Ω)	rzj (Ω)	V_R (V)	min.	max.	(mA)
ZPD Series, 0.5 W, Case Type : DO-35								
ZPD2.7	2.7	5	6.5 (<8)	< 500	-	-9	-4	160
ZPD3.0	3.0	5	75 (<83)	< 500	-	-9	-3	140
ZPD3.3	3.3	5	80 (<95)	< 500	-	-8	-3	130
ZPD3.6	3.6	5	80 (<95)	< 500	-	-8	-3	120
ZPD3.9	3.9	5	80 (<95)	< 500	-	-7	-3	110
ZPD4.3	4.3	5	80 (<95)	< 500	-	-6	-1	100
ZPD4.7	4.7	5	70 (<78)	< 500	-	-5	+2	90
ZPD5.1	5.1	5	30 (<60)	< 480	> 0.8	-3	+4	80
ZPD5.6	5.6	5	10 (<40)	< 400	> 1	-2	+6	70
ZPD6.2	6.2	5	4.8 (<10)	< 200	> 2	-1	+7	64
ZPD6.8	6.8	5	4.5 (<8)	< 150	> 3	+2	+7	58
ZPD7.5	7.5	5	4.0 (<7)	< 50	> 5	+3	+7	53
ZPD8.2	8.2	5	4.5 (<7)	< 50	> 6	+4	+7	47
ZPD9.1	9.1	5	4.8 (<10)	< 50	> 7	+5	+8	43
ZPD10	10	5	5.2 (<15)	< 70	> 7.5	+5	+8	40
ZPD11	11	5	6 (<20)	< 70	> 8.5	+5	+9	36
ZPD12	12	5	7 (<20)	< 90	> 9	+6	+9	32
ZPD13	13	5	9 (<25)	< 110	> 10	+7	+9	29
ZPD15	15	5	11 (<30)	< 110	> 11	+7	+9	27
ZPD16	16	5	13 (<40)	< 170	> 12	+8	+9.5	24
ZPD18	18	5	18 (<50)	< 170	> 14	+8	+9.5	21
ZPD20	20	5	20 (<50)	< 220	> 15	+8	+10	20
ZPD22	22	5	25 (<55)	< 220	> 17	+8	+10	18
ZPD24	24	5	28 (<80)	< 220	> 18	+8	+10	16
ZPD27	27	5	30 (<80)	< 250	> 20	+8	+10	14
ZPD30	30	5	35 (<80)	< 250	> 22.5	+8	+10	13
ZPD33	33	5	40 (<80)	< 250	> 25	+8	+10	12
ZPD36	36	5	40 (<90)	< 250	> 27	+8	+10	11
ZPD39	39	5	50 (<90)	< 300	> 29	+10	+12	10
ZPD43	43	5	60 (<100)	< 700	> 32	+10	+12	9.2
ZPD47	47	5	70 (<100)	< 750	> 35	+10	+12	8.5
ZPD51	51	5	70 (<100)	< 750	> 38	+10	+12	7.8
ZPD56	56	2.5	<135(3)	< 1000(4)	> 42	+10 (typ.)		7.1
ZPD62	62	2.5	<150(3)	< 1000(4)	> 47	+10 (typ.)		6.4
ZPD68	68	2.5	<200(3)	< 1000(4)	> 51	+10 (typ.)		5.8
ZPD75	75	2.5	<250(3)	<1500(4)	> 55	+10 (typ.)		5.3

Notes :

(1) Tested with pulse tp = 5 ms

(2) Valid provided that leads are at distance of 4 mm from case and kept at ambient temperature

(3) At I_Z = 2.5mA

(4) At I_Z = 0.5mA

(5) The type numbers listed have a standard tolerance on the nominal zener voltage of ± 5.0%

Zener Diodes 1.0 W

The plastic material carries U/L recognition 94V-0.

Type No.		Nominal Zener Voltage		Maximum Zener Impedance			Maximum Reverse Leakage Current		Maximum DC Zener Current
		V_Z@I_{ZT} (2)	I_{ZT}	Z_{ZT} @ I_{ZT}	Z_{ZK} @ I_{ZK}	I_{ZK}	I_R @	V_R	I_{ZM}
Axial Lead	SMD	(V)	(mA)	(Ω)	(Ω)	(mA)	(μA)	(V)	(mA)
1N4728/SZ10 Series, 1 W, Case Type : DO-41/SMA									
1N4728	**SZ103D**	3.3	76.0	10	400	1.0	100	1.0	276
1N4729	**SZ103G**	3.6	69.0	10	400	1.0	100	1.0	252
1N4730	**SZ103J**	3.9	64.0	9.0	400	1.0	50	1.0	234
1N4731	**SZ104D**	4.3	58.0	9.0	400	1.0	10	1.0	217
1N4732	**SZ104H**	4.7	53.0	8.0	500	1.0	10	1.0	193
1N4733	**SZ105B**	5.1	49.0	7.0	550	1.0	10	1.0	178
1N4734	**SZ105G**	5.6	45.0	5.0	600	1.0	10	2.0	162
1N4735	**SZ106C**	6.2	41.0	2.0	700	1.0	10	3.0	146
1N4736	**SZ106I**	6.8	37.0	3.5	700	1.0	10	4.0	133
1N4737	**SZ107F**	7.5	34.0	4.0	700	0.5	10	5.0	121
1N4738	**SZ108C**	8.2	31.0	4.5	700	0.5	10	6.0	110
1N4739	**SZ109B**	9.1	28.0	5.0	700	0.5	10	7.0	100
1N4740	**SZ1010**	10	25.0	7.0	700	0.25	10	7.6	91
1N4741	**SZ1011**	11	23.0	8.0	700	0.25	5.0	8.4	83
1N4742	**SZ1012**	12	21.0	9.0	700	0.25	5.0	9.1	76
1N4743	**SZ1013**	13	19.0	10	700	0.25	5.0	9.9	69
1N4744	**SZ1015**	15	17.0	14	700	0.25	5.0	11.4	61
1N4745	**SZ1016**	16	15.5	16	700	0.25	5.0	12.2	57
1N4746	**SZ1018**	18	14.0	20	750	0.25	5.0	13.7	50
1N4747	**SZ1020**	20	12.5	22	750	0.25	5.0	15.2	45
1N4748	**SZ1022**	22	11.5	23	750	0.25	5.0	16.7	41
1N4749	**SZ1024**	24	10.5	25	750	0.25	5.0	18.2	38
1N4750	**SZ1027**	27	9.5	35	750	0.25	5.0	20.6	34
1N4751	**SZ1030**	30	8.5	40	1000	0.25	5.0	22.8	30
1N4752	**SZ1033**	33	7.5	45	1000	0.25	5.0	25.1	27
1N4753	**SZ1036**	36	7.0	50	1000	0.25	5.0	27.4	25
1N4754	**SZ1039**	39	6.5	60	1000	0.25	5.0	29.7	23
1N4755	**SZ1043**	43	6.0	70	1500	0.25	5.0	32.7	22
1N4756	**SZ1047**	47	5.5	80	1500	0.25	5.0	35.8	19
1N4757	**SZ1051**	51	5.0	95	1500	0.25	5.0	38.8	18
1N4758	**SZ1056**	56	4.5	110	2000	0.25	5.0	42.6	16
1N4759	**SZ1062**	62	4.0	125	2000	0.25	5.0	47.1	14
1N4760	**SZ1068**	68	3.7	150	2000	0.25	5.0	51.7	13
1N4761	**SZ1075**	75	3.3	175	2000	0.25	5.0	56.0	12
1N4762	**SZ1082**	82	3.0	200	3000	0.25	5.0	62.2	11
1N4763	**SZ1091**	91	2.8	250	3000	0.25	5.0	69.2	10
1N4764	**SZ10B0**	100	2.5	350	3000	0.25	5.0	76.0	9.0
Z1110	**SZ10B1**	110	2.3	450	4000	0.25	5.0	83.6	8.6
Z1120	**SZ10B2**	120	2.0	550	4500	0.25	5.0	91.2	7.8
Z1130	**SZ10B3**	130	1.9	700	5000	0.25	5.0	98.8	7.0
Z1150	**SZ10B5**	150	1.7	1000	6000	0.25	5.0	114.0	6.4
Z1160	**SZ10B6**	160	1.6	1100	6500	0.25	5.0	121.6	5.8
Z1180	**SZ10B8**	180	1.4	1200	7000	0.25	5.0	136.8	5.2
Z1200	**SZ10D0**	200	1.2	1900	9990	0.25	5.0	152.0	4.7
Z1220	**SZ10D2**	220	1.0	1600	8000	0.25	5.0	167.2	4.0
Z1240	**SZ10D4**	240	0.93	1800	8500	0.25	5.0	182.4	3.8
Z1250	**SZ10D5**	250	0.9	2000	9000	0.25	5.0	190	3.6
Z1270	**SZ10D7**	270	0.82	2100	9000	0.25	5.0	205	3.3
Z1300	**SZ10E0**	300	0.75	2300	9500	0.25	5.0	228	3.0

Notes :

(1) For $V_Z \leq 200$ V; V_F = 1.2 Vmax. @ I_F = 200 mA and for $V_Z > 200$ V; VF = 2 Vmax. @ IF = 200 mA.

(2) The type numbers listed have a standard tolerance on the nominal zener voltage of ± 10%. A standard tolerance of ± 5% is also available by adding suffix "A" to the standard type for Axial Lead or by replacing the fourth digit of standard type from "0" to "5" for SMD.

(3) "SZ" for SMD parts will be omitted on marking of the diode

(4) Use suffix "C" for tolerance ± 2% (Axial Lead)

Zener Diodes 1.0 W

The plastic material carries U/L recognition 94V-0.

Type No.[2]	Nominal Zener Voltage		Maximum Zener Impedance			Maximum Reverse Leakage Current	
	V_Z@I_{ZT} [1]	I_{ZT}	Z_{ZT} @ I_{ZT}	Z_{ZK} @ I_{ZK}	I_{ZK}	I_R @ V_R	
Axial Lead	(V)	(mA)	(Ω)	(Ω)	(mA)	(μA)	(V)

Z1T-100B Series, 1 W, Case Type : DO-41



Z1T-100B	100	0.95	750	5000	0.1	0.1	86
Z1T-110B	110	0.95	750	5000	0.1	0.1	94
Z1T-115B	115	0.95	750	5000	0.1	0.1	98
Z1T-120B	120	0.95	850	5000	0.1	0.1	103
Z1T-130B	130	0.95	1000	5000	0.1	0.1	111
Z1T-140B	140	0.90	1200	5000	0.1	0.1	120
Z1T-150B	150	0.85	1300	5000	0.1	0.1	128
Z1T-160B	160	0.80	1500	5000	0.1	0.1	137
Z1T-170B	170	0.74	2200	5000	0.1	0.1	145
Z1T-180B	180	0.68	2200	5000	0.1	0.1	154
Z1T-190B	190	0.66	2500	5000	0.1	0.1	162
Z1T-200B	200	0.65	2500	8000	0.1	0.1	171
Z1T-210B	210	0.62	5000	9000	0.1	0.1	180
Z1T-220B	220	0.59	5000	9000	0.1	0.1	188
Z1T-230B	230	0.57	5000	9000	0.1	0.1	197
Z1T-240B	240	0.54	5000	9000	0.1	0.1	205
Z1T-250B	250	0.52	5000	9000	0.1	0.1	214
Z1T-260B	260	0.50	5000	9000	0.1	0.1	222
Z1T-270B	270	0.48	5000	9000	0.1	0.1	231
Z1T-280B	280	0.46	5000	9000	0.1	0.1	239
Z1T-290B	290	0.45	5000	9000	0.1	0.1	248
Z1T-300B	300	0.43	5000	9000	0.1	0.1	257
Z1T-310B	310	0.42	5000	9500	0.1	0.1	265
Z1T-320B	320	0.41	5000	9500	0.1	0.1	274
Z1T-330B	330	0.39	5000	9500	0.1	0.1	282

Notes :

(1) V_F = 1.2 Vmax. @ I_F = 200 mA

(2) Suffix " B " indicates ± 5.0% tolerance," A " indicates ± 10% tolerance.

Zener Diodes 1.0 W

The plastic material carries U/L recognition 94V-0.

Type No.	Nominal Zener Voltage		Maximum Zener Impedance			Maximum Reverse Leakage Current		Maximum DC Zener Current	Maximum Surge Current
	V_Z[(1)] @ I_{ZT}	I_{ZT}	Z_{ZT} @ I_{ZT}	Z_{ZK} @ I_{ZK}	I_{ZK}	I_R @ V_R		I_{ZM}	I_{RM}
Axial Lead	(V)	(mA)	(Ω)	(Ω)	(mA)	(μA)	(V)	(mA)	(mApk)

MZ4728 Series, 1.0 W, Case Type : M1A

MZ4728	3.3	76.0	10	400	1.0	100	1.0	276	1380
MZ4729	3.6	69.0	10	400	1.0	100	1.0	252	1260
MZ4730	3.9	64.0	9.0	400	1.0	50	1.0	234	1190
MZ4731	4.3	58.0	9.0	400	1.0	10	1.0	217	1070
MZ4732	4.7	53.0	8.0	500	1.0	10	1.0	193	970
MZ4733	5.1	49.0	7.0	550	1.0	10	1.0	178	890
MZ4734	5.6	45.0	5.0	600	1.0	10	2.0	162	810
MZ4735	6.2	41.0	2.0	700	1.0	10	3.0	146	730
MZ4736	6.8	37.0	3.5	700	1.0	10	4.0	133	660
MZ4737	7.5	34.0	4.0	700	0.5	10	5.0	121	605
MZ4738	8.2	31.0	4.5	700	0.5	10	6.0	110	550
MZ4739	9.1	28.0	5.0	700	0.5	10	7.0	100	500
MZ4740	10	25.0	7.0	700	0.25	10	7.6	91	454
MZ4741	11	23.0	8.0	700	0.25	5.0	8.4	83	414
MZ4742	12	21.0	9.0	700	0.25	5.0	9.1	76	380
MZ4743	13	19.0	10	700	0.25	5.0	9.9	69	344
MZ4744	15	17.0	14	700	0.25	5.0	11.4	61	305
MZ4745	16	15.5	16	700	0.25	5.0	12.2	57	285
MZ4746	18	14.0	20	750	0.25	5.0	13.7	50	250
MZ4747	20	12.5	22	750	0.25	5.0	15.2	45	225
MZ4748	22	11.5	23	750	0.25	5.0	16.7	41	205
MZ4749	24	10.5	25	750	0.25	5.0	18.2	38	190
MZ4750	27	9.5	35	750	0.25	5.0	20.6	34	170
MZ4751	30	8.5	40	1000	0.25	5.0	22.8	30	150
MZ4752	33	7.5	45	1000	0.25	5.0	25.1	27	135
MZ4753	36	7.0	50	1000	0.25	5.0	27.4	25	125
MZ4754	39	6.5	60	1000	0.25	5.0	29.7	23	115
MZ4755	43	6.0	70	1500	0.25	5.0	32.7	22	110
MZ4756	47	5.5	80	1500	0.25	5.0	35.8	19	95
MZ4757	51	5.0	95	1500	0.25	5.0	38.8	18	90
MZ4758	56	4.5	110	2000	0.25	5.0	42.6	16	80
MZ4759	62	4.0	125	2000	0.25	5.0	47.1	14	70
MZ4760	68	3.7	150	2000	0.25	5.0	51.7	13	65
MZ4761	75	3.3	175	2000	0.25	5.0	56.0	12	60
MZ4762	82	3.0	200	3000	0.25	5.0	62.2	11	55
MZ4763	91	2.8	250	3000	0.25	5.0	69.2	10	50
MZ4764	100	2.5	350	3000	0.25	5.0	76.0	9.0	45
MZ1110	110	2.3	450	4000	0.25	5.0	83.6	8.6	40
MZ1120	120	2.0	550	4500	0.25	5.0	91.2	7.8	37
MZ1130	130	1.9	700	5000	0.25	5.0	98.8	7.0	34
MZ1150	150	1.7	1000	6000	0.25	5.0	114.0	6.4	30
MZ1160	160	1.6	1100	6500	0.25	5.0	121.6	5.8	28
MZ1180	180	1.4	1200	7000	0.25	5.0	136.8	5.2	25
MZ1200	200	1.2	1900	9990	0.25	5.0	152.0	4.7	22

Note : (1) The type number listed have a standard tolerance on the nominal zener voltage of ± 10%.
Suffix "A" indicates ± 5% tolerance, suffix "C" indicates ± 2% tolerance

Zener Diodes 1.0 W

Type No.		Nominal Zener Voltage(3)		Maximum Zener Impedance(1)			Maximum Reverse Leakage Current		Maximum Regulator Current	Maximum Surge Current
		V_Z @ I_{ZT}	I_{ZT}	Z_{ZT} @ I_{ZT}	Z_{ZK} @ I_{ZK}	I_{ZK}	I_R @ V_R		I_{ZM}(2)	I_{RM}
Axial Lead	SMD	(V)	(mA)	(Ω)	(Ω)	(mA)	(μA)	(V)	(mA)	(mA)
1N4728AG/ZM4728A Series, Case Type : DO-41G / MELF										
1N4728AG	**ZM4728A**	3.3	76.0	10	400	1.0	100	1.0	276	1380
1N4729AG	**ZM4729A**	3.6	69.0	10	400	1.0	100	1.0	252	1260
1N4730AG	**ZM4730A**	3.9	64.0	9.0	400	1.0	50	1.0	234	1190
1N4731AG	**ZM4731A**	4.3	58.0	9.0	400	1.0	10	1.0	217	1070
1N4732AG	**ZM4732A**	4.7	53.0	8.0	500	1.0	10	1.0	193	970
1N4733AG	**ZM4733A**	5.1	49.0	7.0	550	1.0	10	1.0	178	890
1N4734AG	**ZM4734A**	5.6	45.0	5.0	600	1.0	10	2.0	162	810
1N4735AG	**ZM4735A**	6.2	41	2.0	700	1.0	10	3.0	146	730
1N4736AG	**ZM4736A**	6.8	37.0	3.5	700	1.0	10	4.0	133	660
1N4737AG	**ZM4737A**	7.5	34.0	4.0	700	0.5	10	5.0	121	605
1N4738AG	**ZM4738A**	8.2	31	4.5	700	0.5	10	6.0	110	550
1N4739AG	**ZM4739A**	9.1	28.0	5.0	700	0.5	10	7.0	100	500
1N4740AG	**ZM4740A**	10	25.0	7.0	700	0.25	10	7.6	91	454
1N4741AG	**ZM4741A**	11	23.0	8.0	700	0.25	5.0	8.4	83	414
1N4742AG	**ZM4742A**	12	21	9.0	700	0.25	5.0	9.1	76	380
1N4743AG	**ZM4743A**	13	19.0	10	700	0.25	5.0	9.9	69	344
1N4744AG	**ZM4744A**	15	17.0	14	700	0.25	5.0	11.4	61	305
1N4745AG	**ZM4745A**	16	15.5	16	700	0.25	5.0	12.2	57	285
1N4746AG	**ZM4746A**	18	14.0	20	750	0.25	5.0	13.7	50	250
1N4747AG	**ZM4747A**	20	12.5	22	750	0.25	5.0	15.2	45	225
1N4748AG	**ZM4748A**	22	11.5	23	750	0.25	5.0	16.7	41	205
1N4749AG	**ZM4749A**	24	10.5	25	750	0.25	5.0	18.2	38	190
1N4750AG	**ZM4750A**	27	9.5	35	750	0.25	5.0	20.6	34	170
1N4751AG	**ZM4751A**	30	8.5	40	1000	0.25	5.0	22.8	30	150
1N4752AG	**ZM4752A**	33	7.5	45	1000	0.25	5.0	25.1	27	135
1N4753AG	**ZM4753A**	36	7.0	50	1000	0.25	5.0	27.4	25	125
1N4754AG	**ZM4754A**	39	6.5	60	1000	0.25	5.0	29.7	23	115
1N4755AG	**ZM4755A**	43	6.0	70	1500	0.25	5.0	32.7	22	110
1N4756AG	**ZM4756A**	47	5.5	80	1500	0.25	5.0	35.8	19	95
1N4757AG	**ZM4757A**	51	5.0	95	1500	0.25	5.0	38.8	18	90
1N4758AG	**ZM4758A**	56	4.5	110	2000	0.25	5.0	42.6	16	80
1N4759AG	**ZM4759A**	62	4.0	125	2000	0.25	5.0	47.1	14	70
1N4760AG	**ZM4760A**	68	3.7	150	2000	0.25	5.0	51.7	13	65
1N4761AG	**ZM4761A**	75	3.3	175	2000	0.25	5.0	56.0	12	60
1N4762AG	**ZM4762A**	82	3.0	200	3000	0.25	5.0	62.2	11	55
1N4763AG	**ZM4763A**	91	2.8	250	3000	0.25	5.0	69.2	10	50
1N4764AG	**ZM4764A**	100	2.5	350	3000	0.25	5.0	76.0	9.0	45



Notes:

(1) The Zener impedance is derived from the 1kHZ AC voltage which results when an AC current having an RMS value equal to 10% of the Zener current (I_{ZT} or I_{ZK}) is superimposed on I_{ZT} or I_{ZK}. Zener impedance is measured at two points to ensure a sharp knee on the breakdown curve and to eliminate unstable units

(2) Valid provided that electrodes are at a distance of 10mm from case and kept at ambient temperature

(3) Measured under thermal equilibrium and DC test conditions

(4) Standard Zener voltage tolerance is ± 5% tolerance. Other Zener voltages and tolerances are available upon request.

(5) V_F = 1.2 Vmax. @ I_F = 200 mA

Zener Diodes 1.0 W

The plastic material carries U/L recognition 94V-0.

Type No.	Nominal Zener Voltage	Test Current	Maximum Zener Impedance			Maximum Reverse Leakage Current		Maximum DC Zener Current	Maximum Surge Current
	V_Z @ I_{ZT}	I_{ZT}	Z_{ZT} @ I_{ZT}	Z_{ZK} @ I_{ZK}	I_{ZK}	I_R @	V_R	I_{ZM}	I_{RM} (2)
	(V)	(mA)		(Ω)	(mA)	(μA)	(V)	(mA)	(mApk)
1SMA4728A Series, 1 W, Case Type : SMA									
1SMA4728A	3.3	76.0	10	400	1.0	100	1.0	276	1380
1SMA4729A	3.6	69.0	10	400	1.0	100	1.0	252	1260
1SMA4730A	3.9	58.0	9.0	400	1.0	50	1.0	234	1190
1SMA4731A	4.3	58.0	9.0	400	1.0	10	1.0	217	1070
1SMA4732A	4.7	53.0	8.0	500	1.0	10	1.0	193	970
1SMA4733A	5.1	49.0	7.0	550	1.0	10	1.0	178	890
1SMA4734A	5.6	45.0	5.0	600	1.0	10	2.0	162	810
1SMA4735A	6.2	41.0	2.0	700	1.0	10	3.0	146	730
1SMA4736A	6.8	37.0	3.5	700	1.0	10	4.0	133	660
1SMA4737A	7.5	34.0	4.0	700	0.5	10	5.0	121	605
1SMA4738A	8.2	31.0	4.5	700	0.5	10	6.0	110	550
1SMA4739A	9.1	28.0	5.0	700	0.5	10	7.0	100	500
1SMA4740A	10	25.0	7.0	700	0.25	10	7.6	91	454
1SMA4741A	11	23.0	8.0	700	0.25	5.0	8.4	83	414
1SMA4742A	12	21.0	9.0	700	0.25	5.0	9.1	76	380
1SMA4743A	13	19.0	10	700	0.25	5.0	9.9	69	344
1SMA4744A	15	17.0	14	700	0.25	5.0	11.4	61	305
1SMA4745A	16	15.5	16	700	0.25	5.0	12.2	57	285
1SMA4746A	18	14.0	20	750	0.25	5.0	13.7	50	250
1SMA4747A	20	12.5	22	750	0.25	5.0	15.2	45	225
1SMA4748A	22	11.5	23	750	0.25	5.0	16.7	41	205
1SMA4749A	24	10.5	25	750	0.25	5.0	18.2	38	190
1SMA4750A	27	9.5	35	750	0.25	5.0	20.6	34	170
1SMA4751A	30	8.5	40	1000	0.25	5.0	22.8	30	150
1SMA4752A	33	7.5	45	1000	0.25	5.0	25.1	27	135
1SMA4753A	36	7.0	50	1000	0.25	5.0	27.4	25	125
1SMA4754A	39	6.5	60	1000	0.25	5.0	29.7	23	115
1SMA4755A	43	6.0	70	1500	0.25	5.0	32.7	22	110
1SMA4756A	47	5.5	80	1500	0.25	5.0	35.8	19	95
1SMA4757A	51	5.0	95	1500	0.25	5.0	38.8	18	90
1SMA4758A	56	4.5	110	2000	0.25	5.0	42.6	16	80
1SMA4759A	62	4.0	125	2000	0.25	5.0	47.1	14	70
1SMA4760A	68	3.7	150	2000	0.25	5.0	51.7	13	65
1SMA4761A	75	3.3	175	2000	0.25	5.0	56.0	12	60
1SMA4762A	82	3.0	200	3000	0.25	5.0	62.2	11	55
1SMA4763A	91	2.8	250	3000	0.25	5.0	69.2	10	50
1SMA4764A	100	2.5	350	3000	0.25	5.0	76.0	9.0	45

Notes :

(1) The type numbers listed have a standard tolerance on the nominal zener voltage of ± 5%.

(2) Surge current is a non-repetitive 8.3ms square pulse width wave or equivalent sine-wave superimposed on I_{ZT} as per JEDEC method

Zener Diodes 1.0 W

The plastic material carries U/L recognition 94V-0.

Type No.	Zener Voltage			Test Current	Maximum Zener Impedance		Maximum Reverse Current		Typical Temperature Coefficient	
	V_Z (V) (1)			I_{ZT}	Z_Z @ I_Z		I_R @ V_R		γ_Z	I_Z
	Min.	Typ.	Max.	(mA)	(Ω)	(mA)	(μA)	(V)	(mV/ºC)	(mA)
PTZ3.6B Series, 1 W, Case Type : SMA										
PTZ3.6B	3.6	3.813	4.00	40	15	40	60	1.0	-2.8	40
PTZ3.9B	3.9	4.136	4.40	40	15	40	40	1.0	-2.4	40
PTZ4.3B	4.3	4.572	4.80	40	15	40	20	1.0	-2.1	40
PTZ4.7B	4.7	4.924	5.20	40	10	40	20	1.0	-1.7	40
PTZ5.1B	5.1	5.368	5.70	40	8	40	20	1.5	-0.6	40
PTZ5.6B	5.6	5.856	6.30	40	8	40	20	2.5	1.4	40
PTZ6.2B	6.2	6.509	7.00	40	6	40	20	3.0	2.5	40
PTZ6.8B	6.8	7.280	7.70	40	6	40	20	3.5	3.2	40
PTZ7.5B	7.5	7.889	8.40	40	4	40	20	4.0	4.2	40
PTZ8.2B	8.2	8.655	9.30	40	4	40	20	5.0	5.0	40
PTZ9.1B	9.1	9.747	10.2	40	6	40	20	6.0	5.9	40
PTZ10B	10	10.31	11.2	40	6	40	10	7.0	6.9	40
PTZ11B	11	11.51	12.3	20	8	20	10	8.0	7.9	20
PTZ12B	12	12.50	13.5	20	8	20	10	9.0	8.7	20
PTZ13B	13.3	13.82	15.0	20	10	20	10	10.0	10.1	20
PTZ15B	14.7	15.35	16.5	20	10	20	10	11.0	11.8	20
PTZ16B	16.2	16.86	18.3	20	12	20	10	12.0	13.3	20
PTZ18B	18	19.00	20.3	20	12	20	10	13.0	15.0	20
PTZ20B	20	20.82	22.4	20	14	20	10	15.0	17.4	20
PTZ22B	22	23.85	24.5	10	14	10	10	17.0	19.4	10
PTZ24B	24	25.31	27.6	10	16	10	10	19.0	21.6	10
PTZ27B	27	28.70	30.8	10	16	10	10	21.0	24.6	10
PTZ30B	30	31.57	34.0	10	18	10	10	23.0	27.5	10
PTZ33B	33	34.95	37.0	10	18	10	10	25.0	30.8	10
PTZ36B	36	39.24	40.0	10	20	10	10	27.0	37.0	10



Note :

(1) The Zener Voltage V_Z is measured 40 ms after power is supplied

Zener Diodes 1.0 W

Type No.	Suffix (3)	Zener Voltage V_Z (1)			Dynamic Impedance Z_Z (2)		Reverse Current I_R	
		Min.	Max.	I_Z	Max.	Iz	Max.	V_R
		V	V	mA	Ω	mA	(μA)	(V)
RD2.0F Series, 1 W, Case Type : DO-41 Glass								
RD2.0F	**B**	1.88	2.25	40	25	40	200	0.5
	B1	1.88	2.12					
	B2	2.01	2.25					
RD2.2F	**B**	2.11	2.45	40	20	40	200	0.7
	B1	2.11	2.34					
	B2	2.21	2.45					
RD2.4F	**B**	2.31	2.65	40	15	40	200	1.0
	B1	2.31	2.55					
	B2	2.41	2.65					
RD2.7F	**B**	2.52	2.93	40	15	40	150	1.0
	B1	2.52	2.78					
	B2	2.68	2.93					
RD3.0F	**B**	2.83	3.22	40	15	40	100	1.0
	B1	2.83	3.07					
	B2	2.97	3.22					
RD3.3F	**B**	3.13	3.51	40	15	40	80	1.0
	B1	3.13	3.37					
	B2	3.27	3.51					
RD3.6F	**B**	3.43	3.83	40	15	40	60	1.0
	B1	3.43	3.68					
	B2	3.58	3.83					
RD3.9F	**B**	3.73	4.15	40	15	40	40	1.0
	B1	3.73	4.00					
	B2	3.88	4.15					
RD4.3F	**B**	4.03	4.55	40	15	40	20	1.0
	B1	4.03	4.28					
	B2	4.15	4.41					
	B3	4.28	4.55					
RD4.7F	**B**	4.41	4.91	40	10	40	20	1.0
	B1	4.41	4.65					
	B2	4.53	4.78					
	B3	4.66	4.91					
RD5.1F	**B**	4.79	5.38	40	8	40	20	1.0
	B1	4.79	5.05					
	B2	4.95	5.22					
	B3	5.10	5.38					
RD5.6F	**B**	5.28	5.95	40	8	40	20	1.5
	B1	5.28	5.56					
	B2	5.46	5.75					
	B3	5.65	5.95					
RD6.2F	**B**	5.76	6.52	40	6	40	20	3.0
	B1	5.76	6.14					
	B2	5.98	6.33					
	B3	6.17	6.52					



Zener Diodes 1.0 W

Type No.	Suffix (3)	Zener Voltage V_Z (1)			Dynamic Impedance Z_Z (2)		Reverse Current I_R	
		Min.	Max.	I_Z	Max.	Iz	Max.	V_R
		V	V	mA	Ω	mA	(μA)	(V)
RD2.0F Series, 1 W, Case Type : DO-41 Glass								
RD6.8F	**B**	6.35	7.10	40	6	40	20	3.5
	B1	6.35	6.71					
	B2	6.55	6.90					
	B3	6.74	7.10					
RD7.5F	**B**	6.93	7.80	40	4	40	20	4.0
	B1	6.93	7.33					
	B2	7.17	7.55					
	B3	7.39	7.80					
RD8.2F	**B**	7.58	8.54	40	4	40	20	5.0
	B1	7.58	8.03					
	B2	7.87	8.28					
	B3	8.12	8.54					
RD9.1F	**B**	8.34	9.38	40	6	40	20	6.0
	B1	8.34	8.80					
	B2	8.64	9.08					
	B3	8.91	9.38					
RD10F	**B**	9.16	10.40	40	6	40	10	7.0
	B1	9.16	9.67					
	B2	9.50	9.99					
	B3	9.83	10.40					
RD11F	**B**	10.22	11.43	20	8	20	10	8.0
	B1	10.22	10.75					
	B2	10.54	11.19					
	B3	10.87	11.43					
RD12F	**B**	11.19	12.41	20	8	20	10	8.0
	B1	11.19	11.77					
	B2	11.50	12.09					
	B3	11.80	12.41					
RD13F	**B**	12.19	13.83	20	10	20	10	10
	B1	12.19	12.85					
	B2	12.63	13.30					
	B3	13.11	13.83					
RD15F	**B**	13.55	15.26	20	10	20	10	11
	B1	13.55	14.28					
	B2	14.05	14.77					
	B3	14.52	15.26					
RD16F	**B**	14.98	16.71	20	12	20	10	12
	B1	14.98	15.75					
	B2	15.44	16.23					
	B3	15.89	16.71					
RD18F	**B**	16.37	18.55	20	12	20	10	13
	B1	16.37	17.27					
	B2	17.03	17.91					
	B3	17.64	18.55					



Zener Diodes 1.0 W

Type No.	Suffix (3)	Zener Voltage V_Z (1)			Dynamic Impedance Z_Z (2)		Reverse Current I_R	
		Min.	Max.	I_Z	Max.	Iz	Max.	V_R
		V	V	mA	Ω	mA	(μA)	(V)
RD2.0F Series, 1 W, Case Type : DO-41 Glass								
RD20F	**B**	18.26	20.84	20	14	20	10	15
	B1	18.26	19.21					
	B2	18.93	19.91					
	B3	19.59	20.84					
RD22F	**B**	20.45	22.86	10	14	10	10	17
	B1	20.45	21.51					
	B2	21.10	22.18					
	B3	21.75	22.86					
RD24F	**B**	22.44	25.14	10	16	10	10	19
	B1	22.44	23.59					
	B2	23.17	24.36					
	B3	23.90	25.14					
RD27F	**B**	24.63	28.43	10	16	10	10	21
	B1	24.63	26.10					
	B2	25.70	27.12					
	B3	26.72	28.43					
RD30F	**B**	27.43	31.26	10	18	10	10	23
	B1	27.43	29.09					
	B2	28.64	30.10					
	B3	29.57	31.26					
RD33F	**B**	30.35	34.15	10	18	10	10	25
	B1	30.35	31.97					
	B2	31.49	33.06					
	B3	32.39	34.15					
RD36F	**B**	33.24	37.01	10	20	10	10	27
	B1	33.24	34.94					
	B2	34.26	36.01					
	B3	35.19	37.01					
RD39F	**B**	36.11	40.80	10	20	10	10	30
	B1	36.11	38.00					
	B2	37.14	39.04					
	B3	38.13	40.80					
RD43F	**B**	40.00	45.00	10	50	10	5	33
RD47F	**B**	44.00	49.00	10	50	10	5	36
RD51F	**B**	48.00	54.00	10	50	10	5	39
RD56F	**B**	53.00	60.00	10	50	10	5	43
RD62F	**B**	58.00	66.00	10	50	10	5	47
RD68F	**B**	64.00	72.00	10	70	10	5	52
RD75F	**B**	70.00	79.00	10	90	10	5	57
RD82F	**B**	77.00	87.00	10	90	10	5	63



Notes:

(1) Test with pulse (40 ms)

(2) Z_Z is measured at I_Z given an very small AC Current Signal

(3) When placing an order for an RD2.0F type, please add suffix e.g. RD2.0FB, RD2.0FB1 ….. RD82FB4
The B grade is a wide specification, covering full voltage range for suffix "B1" to "B3"

Zener Diodes 1.0 W

The plastic material carries U/L recognition 94V-0.

Type No.	Zener Voltage (2) V_Z @ I_{ZT}				Maximum Zener Impedance			Maximum Reverse Leakage Current, I_R		Maximum DC Zener Current(1)
	Nom	Min	Max	I_{ZT}	Z_{ZT} @ I_{ZT}	Z_{Zk} @ I_{ZK}	I_{ZK}	I_R	@ V_R	
	(V)	(V)	(V)	(mA)	(Ω)	(Ω)	(mA)	(μA)	(V)	I_{ZM} (mA)

SMAZ5V1 Series, 1 W, Case Type : SMA



SMAZ5V1	5.1	4.84	5.40	100	5.0	500	1.0	2.5	1.0	196
SMAZ5V6	5.6	5.32	5.88	100	2.0	250	2.0	5.0	2.0	179
SMAZ6V2	6.2	5.89	6.51	100	2.0	200	2.0	5.0	3.0	161
SMAZ6V8	6.8	6.46	7.14	100	2.0	200	1.0	5.0	4.0	147
SMAZ7V5	7.5	7.13	7.88	100	2.0	450	1.0	5.0	5.0	133
SMAZ8V2	8.2	7.79	8.61	100	2.0	200	1.0	5.0	6.0	122
SMAZ9V1	9.1	8.65	9.56	50	4.0	200	1.0	5.0	7.0	110
SMAZ10	10.0	9.50	10.50	50	4.0	200	1.0	1.0	7.6	100
SMAZ12	12.0	11.40	12.60	50	7.0	150	1.0	1.0	9.1	83
SMAZ15	15.0	14.25	15.75	50	10	150	1.0	1.0	11.4	67
SMAZ16	16.0	15.20	16.80	25	15	150	1.0	0.5	12.2	63
SMAZ18	18.0	17.10	18.90	25	15	150	1.0	0.5	13.7	56
SMAZ20	20.0	19.00	21.00	25	15	180	1.0	0.5	15.2	50
SMAZ22	22.0	20.90	23.10	25	15	180	1.0	0.5	16.7	45
SMAZ24	24.0	22.80	25.20	25	15	180	1.0	0.5	18.2	42
SMAZ27	27.0	25.65	28.35	25	15	200	1.0	0.5	20.5	37
SMAZ30	30.0	28.50	31.50	25	15	250	1.0	0.5	22.8	33
SMAZ33	33.0	31.35	34.65	25	15	300	1.0	0.5	25.1	30
SMAZ36	36.0	34.20	37.80	10	40	350	1.0	0.5	27.4	28
SMAZ39	39.0	37.05	40.95	10	40	450	1.0	0.5	29.6	26

Notes :

(1) PCB mounted on 1" x 0.85" x 0.062" copper area pads

(2) Short duration test pulse used to minimize self-heating effect

(3) "SMA" will be omitted in marking on the diode.

Zener Diodes 1.0 W

The plastic material carries U/L recognition 94V-0.

Type No.	Nominal Zener Voltage		Maximum Zener Impedance			Maximum Reverse Leakage Current		Maximum DC Zener Current	Maximum Surge Current
	V_Z [1] @ I_{ZT}	I_{ZT}	Z_{ZT} @ I_{ZT}	Z_{ZK} @ I_{ZK}	I_{ZK}	I_R @ V_R		I_{ZM}	I_{RM} [2]
	(V)	(mA)	(Ω)	(Ω)	(mA)	(μA)	(V)	(mA)	(mApk)

SML4728 Series, 1 W, Case Type : SMA



SML4728	3.3	76.0	10	400	1.0	100	1.0	276	1380
SML4729	3.6	69.0	10	400	1.0	100	1.0	252	1260
SML4730	3.9	64.0	9.0	400	1.0	50	1.0	234	1190
SML4731	4.3	58.0	9.0	400	1.0	10	1.0	217	1070
SML4732	4.7	53.0	8.0	500	1.0	10	1.0	193	970
SML4733	5.1	49.0	7.0	550	1.0	10	1.0	178	890
SML4734	5.6	45.0	5.0	600	1.0	10	2.0	162	810
SML4735	6.2	41.0	2.0	700	1.0	10	3.0	146	730
SML4736	6.8	37.0	3.5	700	1.0	10	4.0	133	660
SML4737	7.5	34.0	4.0	700	0.5	10	5.0	121	605
SML4738	8.2	31.0	4.5	700	0.5	10	6.0	110	550
SML4739	9.1	28.0	5.0	700	0.5	10	7.0	100	500
SML4740	10	25.0	7.0	700	0.25	10	7.6	91	454
SML4741	11	23.0	8.0	700	0.25	5.0	8.4	83	414
SML4742	12	21.0	9.0	700	0.25	5.0	9.1	76	380
SML4743	13	19.0	10	700	0.25	5.0	9.9	69	344
SML4744	15	17.0	14	700	0.25	5.0	11.4	61	305
SML4745	16	15.5	16	700	0.25	5.0	12.2	57	285
SML4746	18	14.0	20	750	0.25	5.0	13.7	50	250
SML4747	20	12.5	22	750	0.25	5.0	15.2	45	225
SML4748	22	11.5	23	750	0.25	5.0	16.7	41	205
SML4749	24	10.5	25	750	0.25	5.0	18.2	38	190
SML4750	27	9.5	35	750	0.25	5.0	20.6	34	170
SML4751	30	8.5	40	1000	0.25	5.0	22.8	30	150
SML4752	33	7.5	45	1000	0.25	5.0	25.1	27	135
SML4753	36	7.0	50	1000	0.25	5.0	27.4	25	125
SML4754	39	6.5	60	1000	0.25	5.0	29.7	23	115
SML4755	43	6.0	70	1500	0.25	5.0	32.7	22	110
SML4756	47	5.5	80	1500	0.25	5.0	35.8	19	95
SML4757	51	5.0	95	1500	0.25	5.0	38.8	18	90
SML4758	56	4.5	110	2000	0.25	5.0	42.6	16	80
SML4759	62	4.0	125	2000	0.25	5.0	47.1	14	70
SML4760	68	3.7	150	2000	0.25	5.0	51.7	13	65
SML4761	75	3.3	175	2000	0.25	5.0	56.0	12	60
SML4762	82	3.0	200	3000	0.25	5.0	62.2	11	55
SML4763	91	2.8	250	3000	0.25	5.0	69.2	10	50
SML4764	100	2.5	350	3000	0.25	5.0	76.0	9.0	45

Notes :

(1) Standard voltage tolerance is 10%, add suffix "A" for ± 5% tolerance

(2) Surge current is a non-repetitive 8.3ms square pulse width wave or equivalent sine-wave superimposed on I_{ZT} per JEDEC method

(3) " SML " will be omitted on marking of the diode

Zener Diodes 1.0 W

Type No.	Zener Voltage(1) V_Z @ I_{ZT}		Test Current	Dynamic Resistance at I_{ZT} f = 1kHz	Reverse Voltage at I_R = 0.5 μA	Admissible Zener current(2)	Temp. Coeff. of Zener Voltage at I_{ZT}	
	Min	Max	I_{ZT}	rzj	V_R	I_Z	α_{VZ} (10^{-4}/°C)	
	(V)	(V)	(mA)	(Ω)	(V)	(mA)	Min.	Max.
ZMU Series, 1 W, Case Type : MELF 								
ZMU100	88	110	5	140 (<300)	>75	7	9	13
ZMU120	107	134	5	170 (<330)	>90	6	9	13
ZMU150	130	165	5	200 (<360)	>112	5	9	13
ZMU180	160	200	5	220 (<380)	>134	4	9	13
ZMY Series, 1 W, Case Type : MELF 								
ZMY3.9	3.7	4.1	100	4(<7)	-	203	-7	2
ZMY4.3	4.0	4.6	100	4(<7)	-	182	-7	3
ZMY4.7	4.4	5.0	100	4(<7)	-	165	-7	4
ZMY5.1	4.8	5.4	100	2(<5)	>0.7	150	-6	5
ZMY5.6	5.2	6.0	100	1(<2)	>1.5	135	-3	5
ZMY6.2	5.8	6.6	100	1(<2)	>2.0	128	-1	6
ZMY6.8	6.4	7.2	100	1(<2)	>3.0	110	0	7
ZMY7.5	7.0	7.9	100	1(<2)	>5.0	100	0	7
ZMY8.2	7.7	8.7	100	1(<2)	>6.0	89	3	8
ZMY9.1	8.5	9.6	50	2(<4)	>7.0	82	3	8
ZMY10	9.4	10.6	50	2(<4)	>7.5	74	5	9
ZMY11	10.4	11.6	50	3(<7)	>8.5	66	5	10
ZMY12	11.4	12.7	50	3(<7)	>9.0	60	5	10
ZMY13	12.4	14.1	50	4(<9)	>10	55	5	10
ZMY15	13.8	15.8	50	4(<9)	>11	49	5	10
ZMY16	15.3	17.1	25	5(<10)	>12	44	7	11
ZMY18	16.8	19.1	25	5(<11)	>14	40	7	11
ZMY20	18.8	21.2	25	6(<12)	>15	36	7	11
ZMY22	20.8	23.3	25	7(<13)	>17	34	7	11
ZMY24	22.8	25.6	25	8(<14)	>18	29	7	12
ZMY27	25.1	28.9	25	9(<15)	>20	27	7	12
ZMY30	28	32	25	10(<20)	>22.5	25	7	12
ZMY33	31	35	25	11(<20)	>25	22	7	12
ZMY36	34	38	10	25(<60)	>27	20	7	12
ZMY39	37	41	10	30(<60)	>29	18	8	12
ZMY43	40	46	10	35(<80)	>32	17	8	13
ZMY47	44	50	10	40(<80)	>35	15	8	13
ZMY51	48	54	10	45(<100)	>38	14	8	13
ZMY56	52	60	10	50(<100)	>42	13	8	13
ZMY62	58	66	10	60(<130)	>47	11	8	13
ZMY68	64	72	10	65(<130)	>51	10	8	13
ZMY75	70	79	10	70(<160)	>56	9.0	8	13
ZMY82	77	88	10	80(<160)	>61	8.0	8	13
ZMY91	85	96	5	120(<250)	>68	7.5	9	13
ZMY100	94	106	5	130(<250)	>75	7.0	9	13

Notes:

(1) Tested with pulse tp = 5ms

(2) Valid provided that electrodes are kept at ambient temperature

(3) For ZMY Series standard zener voltage tolerance is ± 5%. Add suffix “C” for ± 2% tolerance.

Zener Diodes 1.3 W

The plastic material carries U/L recognition 94V-0.

Type No.		Nominal Zener Voltage		Maximum Zener Impedance			Maximum Reverse Leakage Current		Maximum DC Zener Current
		V_Z @ I_{ZT}	I_{ZT}	Z_{ZT} @ I_{ZT}	Z_{ZK} @ I_{ZK}	I_{ZK}	I_R @	V_R	I_{ZM}
Axial Lead	SMD	(V)	(mA)	(W)	(W)	(mA)	(mA)	(V)	(mA)
BZX85/SZ25 Series, 1.3 W, Case Type : DO-41/SMA									
BZX85C2V4	**SZ252D**	2.4	80	20	400	1.0	150	1.0	410
BZX85C2V7	**SZ252H**	2.7	80	20	400	1.0	150	1.0	370
BZX85C3V0	**SZ253A**	3.0	80	20	400	1.0	100	1.0	340
BZX85C3V3	**SZ253D**	3.3	80	20	400	1.0	40	1.0	320
BZX85C3V6	**SZ253G**	3.6	70	20	500	1.0	20	1.0	290
BZX85C3V9	**SZ253J**	3.9	60	15	500	1.0	10	1.0	280
BZX85C4V3	**SZ254D**	4.3	50	13	500	1.0	3.0	1.0	250
BZX85C4V7	**SZ254H**	4.7	45	13	500	1.0	3.0	1.0	215
BZX85C5V1	**SZ255B**	5.1	45	10	500	1.0	1.0	1.5	200
BZX85C5V6	**SZ255G**	5.6	45	7.0	400	1.0	1.0	2.0	190
BZX85C6V2	**SZ256C**	6.2	35	4.0	300	1.0	1.0	3.0	170
BZX85C6V8	**SZ256I**	6.8	35	3.5	300	1.0	50	4.0	155
BZX85C7V5	**SZ257F**	7.5	35	3.0	200	0.5	50	4.5	140
BZX85C8V2	**SZ258C**	8.2	25	5.0	200	0.5	50	6.2	130
BZX85C9V1	**SZ259B**	9.1	25	5.0	200	0.5	50	6.8	120
BZX85C10	**SZ2510**	10	25	7.0	200	0.5	0.5	7.5	105
BZX85C11	**SZ2511**	11	20	8.0	300	0.5	0.5	8.2	97
BZX85C12	**SZ2512**	12	20	9.0	350	0.5	0.5	9.1	88
BZX85C13	**SZ2513**	13	20	10	400	0.5	0.5	10	79
BZX85C15	**SZ2515**	15	15	15	500	0.5	0.5	11	71
BZX85C16	**SZ2516**	16	15	15	500	0.5	0.5	12	66
BZX85C18	**SZ2518**	18	15	20	500	0.5	0.5	13	62
BZX85C20	**SZ2520**	20	10	24	600	0.5	0.5	15	56
BZX85C22	**SZ2522**	22	10	25	600	0.5	0.5	16	52
BZX85C24	**SZ2524**	24	10	25	600	0.5	0.5	18	47
BZX85C27	**SZ2527**	27	8.0	30	750	0.25	0.5	20	41
BZX85C30	**SZ2530**	30	8.0	30	1000	0.25	0.5	22	36
BZX85C33	**SZ2533**	33	8.0	35	1000	0.25	0.5	24	33
BZX85C36	**SZ2536**	36	8.0	40	1000	0.25	0.5	27	30
BZX85C39	**SZ2539**	39	6.0	50	1000	0.25	0.5	30	28
BZX85C43	**SZ2543**	43	6.0	50	1000	0.25	0.5	33	26
BZX85C47	**SZ2547**	47	4.0	90	1500	0.25	0.5	36	23
BZX85C51	**SZ2551**	51	4.0	115	1500	0.25	0.5	39	21
BZX85C56	**SZ2556**	56	4.0	120	2000	0.25	0.5	43	19
BZX85C62	**SZ2562**	62	4.0	125	2000	0.25	0.5	47	16
BZX85C68	**SZ2568**	68	4.0	130	2000	0.25	0.5	51	15
BZX85C75	**SZ2575**	75	4.0	135	2000	0.25	0.5	56	14
BZX85C82	**SZ2582**	82	2.7	200	3000	0.25	0.5	62	12
BZX85C91	**SZ2591**	91	2.7	250	3000	0.25	0.5	68	10
BZX85C100	**SZ25B0**	100	2.7	350	3000	0.25	0.5	75	9.4
BZX85C110	**SZ25B1**	110	2.7	450	4000	0.25	0.5	82	8.6
BZX85C120	**SZ25B2**	120	2.0	550	4500	0.25	0.5	91	7.8
BZX85C130	**SZ25B3**	130	2.0	700	5000	0.25	0.5	100	7.0
BZX85C150	**SZ25B5**	150	2.0	1000	6000	0.25	0.5	110	6.4
BZX85C160	**SZ25B6**	160	1.5	1100	6500	0.25	0.5	120	5.8
BZX85C180	**SZ25B8**	180	1.5	1200	7000	0.25	0.5	130	5.2
BZX85C200	**SZ25D0**	200	1.5	1500	8000	0.25	0.5	150	4.7

Notes:

(1) V_F = 1.2 Vmax. @ I_F = 200 mA.

(2) The type numbers listed have a standard tolerance on the nominal zener voltage of ± 5%. Add suffix “B” for ± 2% tolerance for axial lead.

(3) "BZX" for Axial Lead / "SZ" for SMD will be omitted on marking of the diode.

Zener Diodes 1.3 W

The plastic material carries U/L recognition 94V-0.

Type No.	Nominal Zener Voltage		Maximum Zener Impedance			Maximum Reverse Leakage Current		Maximum DC Zener Current
	V_Z @ I_{ZT}	I_{ZT}	Z_{ZT} @ I_{ZT}	Z_{ZK} @ I_{ZK}	I_{ZK}	I_R @	V_R	I_{ZM}
Axial Lead	(V)	(mA)	(Ω)	(Ω)	(mA)	(μA)	(V)	(mA)

MZ85C Series, 1.3 W, Case Type : M1A

MZ85C3V0	3.0	80	20	400	1.0	100	1.0	340
MZ85C3V3	3.3	80	20	400	1.0	40	1.0	320
MZ85C3V6	3.6	70	20	500	1.0	20	1.0	290
MZ85C3V9	3.9	60	15	500	1.0	10	1.0	280
MZ85C4V3	4.3	50	13	500	1.0	3.0	1.0	250
MZ85C4V7	4.7	45	13	500	1.0	3.0	1.0	215
MZ85C5V1	5.1	45	10	500	1.0	1.0	1.5	200
MZ85C5V6	5.6	45	7.0	400	1.0	1.0	2.0	190
MZ85C6V2	6.2	35	4.0	300	1.0	1.0	3.0	170
MZ85C6V8	6.8	35	3.5	300	1.0	50	4.0	155
MZ85C7V5	7.5	35	3.0	200	0.5	50	4.5	140
MZ85C8V2	8.2	25	5.0	200	0.5	50	6.2	130
MZ85C9V1	9.1	25	5.0	200	0.5	50	6.8	120
MZ85C10	10	25	7.0	200	0.5	50	7.5	105
MZ85C11	11	20	8.0	300	0.5	50	8.2	97
MZ85C12	12	20	9.0	350	0.5	0.5	9.1	88
MZ85C13	13	20	10	400	0.5	0.5	10	79
MZ85C15	15	15	15	500	0.5	0.5	11	71
MZ85C16	16	15	15	500	0.5	0.5	12	66
MZ85C18	18	15	20	500	0.5	0.5	13	62
MZ85C19	19	15	20	550	0.5	0.5	14	58
MZ85C20	20	10	24	600	0.5	0.5	15	56
MZ85C22	22	10	25	600	0.5	0.5	16	52
MZ85C24	24	10	25	600	0.5	0.5	18	47
MZ85C27	27	8.0	30	750	0.25	0.5	20	41
MZ85C30	30	8.0	30	1000	0.25	0.5	22	36
MZ85C33	33	8.0	35	1000	0.25	0.5	24	33
MZ85C36	36	8.0	40	1000	0.25	0.5	27	30
MZ85C39	39	6.0	50	1000	0.25	0.5	30	28
MZ85C43	43	6.0	50	1000	0.25	0.5	33	26
MZ85C47	47	4.0	90	1500	0.25	0.5	36	23
MZ85C51	51	4.0	115	1500	0.25	0.5	39	21
MZ85C56	56	4.0	120	2000	0.25	0.5	43	19
MZ85C62	62	4.0	125	2000	0.25	0.5	47	16
MZ85C68	68	4.0	130	2000	0.25	0.5	51	15
MZ85C75	75	4.0	135	2000	0.25	0.5	56	14
MZ85C82	82	2.7	200	3000	0.25	0.5	62	12
MZ85C91	91	2.7	250	3000	0.25	0.5	68	10
MZ85C100	100	2.7	350	3000	0.25	0.5	75	9.4
MZ85C110	110	2.7	450	4000	0.25	0.5	82	8.6
MZ85C120	120	2.0	550	4500	0.25	0.5	91	7.8
MZ85C130	130	2.0	700	5000	0.25	0.5	100	7.0
MZ85C150	150	2.0	1000	6000	0.25	0.5	110	6.4
MZ85C160	160	1.5	1100	6500	0.25	0.5	120	5.8
MZ85C180	180	1.5	1200	7000	0.25	0.5	130	5.2
MZ85C200	200	1.5	1900	9990	0.25	0.5	150	4.7

Note :

(1) The type number listed have a standard tolerance on the nominal zener voltage of ± 5.0%.

Zener Diodes 1.3 W

Type No.	Zener Voltage (1) V_Z @ I_{ZT}		Test Current	Dynamic Resistance	Reverse Voltage at I_R = 0.5mA	Admissible Zener Current	Temp. coefficient of Zener Voltage	
	Min.	Max.	I_{ZT}	at I_{ZT}, f = 1kHz	V_R	I_Z (2)	$\alpha_{vz}(10^{-4}$ / °C)	
	(V)	(V)	(mA)	rzj (Ω)	(V)	(mA)	min.	max.
ZPY Series, 1.3 W, Case Type : DO-41 Glass								
ZPY3.9	3.7	4.1	100	4 (< 7)	-	290	-7	+2
ZPY4.3	4.0	4.6	100	4 (< 7)	-	280	-7	+3
ZPY4.7	4.4	5.0	100	2 (< 5)	-	250	-7	+4
ZPY5.1	4.8	6.4	100	1 (< 2)	> 0.7	215	-6	+5
ZPY5.6	5.2	6.0	100	1 (< 2)	> 1.5	200	-3	+5
ZPY6.2	5.8	6.6	100	1 (< 2)	> 2.0	190	-1	+6
ZPY6.8	6.4	7.2	100	1 (< 2)	> 3.0	170	0	+7
ZPY7.5	7.0	7.9	100	1 (< 2)	> 5.0	155	0	+7
ZPY8.2	7.7	8.7	100	1 (< 2)	> 6.0	140	+3	+8
ZPY9.1	8.5	9.6	50	2 (< 4)	> 7.0	130	+3	+8
ZPY10	9.41	10.6	50	2 (< 4)	> 7.5	120	+5	+9
ZPY11	10.4	11.6	50	3 (< 7)	> 8.5	105	+5	+10
ZPY12	11.4	12.7	50	3 (< 7)	> 9.0	97	+5	+10
ZPY13	12.4	14.1	50	4 (< 9)	> 10	88	+5	+10
ZPY15	13.8	15.8	50	4 (< 9)	> 11	79	+5	+10
ZPY16	15.3	17.1	25	5 (< 10)	> 12	71	+7	+11
ZPY18	16.8	19.1	25	5 (< 11)	> 14	66	+7	+11
ZPY20	18.8	21.2	25	6 (< 12)	> 15	62	+7	+11
ZPY22	20.8	23.3	25	7 (< 13)	> 17		+7	+11
ZPY24	22.8	25.6	25	8 (< 14)	> 18	56	+7	+12
ZPY27	25.1	28.9	25	9 (< 15)	> 20	52	+7	+12
ZPY30	28	32	25	10 (< 20)	> 22.5	47	+7	+12
ZPY33	31	35	25	11 (<20)	> 25	41	+7	+12
ZPY36	34	38	10	25 (< 60)	> 27	36	+7	+12
ZPY39	37	41	10	30 (< 60)	> 29	33	+8	+12
ZPY43	40	46	10	35 (< 80)	> 32	30	+8	+13
ZPY47	44	50	10	40 (< 80)	> 35	28	+8	+13
ZPY51	48	64	10	45 (< 100)	> 38	26	+8	+13
ZPY56	52	60	10	50 (< 100)	> 42	23	+8	+13
ZPY62	58	66	10	60 (< 130)	> 47	21	+8	+13
ZPY68	64	72	10	65 (< 130)	> 51	19	+8	+13
ZPY75	70	79	10	70 (< 160)	> 56	16	+8	+13
ZPY82	77	88	10	80 (< 160)	> 61	15	+8	+13
ZPY91	85	96	5	120 (< 250)	> 68	14	+9	+13
ZPY100	94	106	5	130 (< 250)	> 75	12	+9	+13



Notes:

(1) Tested with pulse tp = 5 ms

(2) Valid provided that leads are kept at ambient temperature at a distance of 10 mm from case.

For devices in glass DO-41 case with higher Zener voltage but same power dissipation see types ZPU100 … ZPU180

Zener Diodes 1.5 W

The plastic material carries U/L recognition 94V-0.

Type No.	Nominal Zener Voltage		Maximum Zener Impedance			Maximum Reverse Leakage Current		Maximum DC Zener Current
	V_Z @ I_{ZT}	I_{ZT}	Z_{ZT} @ I_{ZT}	Z_{ZK} @ I_{ZK}	I_{ZK}	I_R @	V_R	I_{ZM}
	(V)	(mA)	(Ω)	(Ω)	(mA)	(μA)	(V)	(mA)
MZ5913A	3.3	113.6	10.0	500	1.0	100	1.0	454
MZ5914A	3.6	104.2	9.0	500	1.0	75	1.0	416
MZ5915A	3.9	96.1	7.5	500	1.0	25	1.0	384
MZ5916A	4.3	87.2	6.0	500	1.0	5.0	1.0	348
MZ5917A	4.7	79.8	5.0	500	1.0	5.0	1.5	319
MZ5918A	5.1	73.5	4.0	350	1.0	5.0	2.0	294
MZ5919A	5.6	66.9	2.0	250	1.0	5.0	3.0	267
MZ5920A	6.2	60.5	2.0	200	1.0	5.0	4.0	241
MZ5921A	6.8	55.1	2.5	200	1.0	5.0	5.2	220
MZ5922A	7.5	50.0	3.0	400	0.5	5.0	6.0	200
MZ5923A	8.2	45.7	3.5	400	0.5	5.0	6.5	182
MZ5924A	9.1	41.2	4.0	500	0.5	5.0	7.0	164
MZ5925A	10	37.5	4.5	500	0.25	5.0	8.0	150
MZ5926A	11	34.1	5.5	550	0.25	1.0	8.4	136
MZ5927A	12	31.2	6.5	550	0.25	1.0	9.1	125
MZ5928A	13	28.8	7.0	550	0.25	1.0	9.9	115
MZ5929A	15	25.0	9.0	600	0.25	1.0	11.4	100
MZ5930A	16	23.4	10	600	0.25	1.0	12.2	93
MZ5931A	18	20.8	12	650	0.25	1.0	13.7	83
MZ5932A	20	18.7	14	650	0.25	1.0	15.2	75
MZ5933A	22	17.0	17.5	650	0.25	1.0	16.7	68
MZ5934A	24	15.6	19	700	0.25	1.0	18.2	62
MZ5935A	27	13.9	23	700	0.25	1.0	20.6	55
MZ5936A	30	12.5	26	750	0.25	1.0	22.8	50
MZ5937A	33	11.4	33	800	0.25	1.0	25.1	45
MZ5938A	36	10.4	38	850	0.25	1.0	27.4	41
MZ5939A	39	9.6	45	900	0.25	1.0	29.7	38
MZ5940A	43	8.7	53	950	0.25	1.0	32.7	34
MZ5941A	47	8.0	67	1000	0.25	1.0	35.8	31
MZ5942A	51	7.3	70	1100	0.25	1.0	38.8	29
MZ5943A	56	6.7	86	1300	0.25	1.0	42.6	26
MZ5944A	62	6.0	100	1500	0.25	1.0	47.1	24
MZ5945A	68	5.5	120	1700	0.25	1.0	51.7	22
MZ5946A	75	5.0	140	2000	0.25	1.0	56.0	20
MZ5947A	82	4.6	160	2500	0.25	1.0	62.2	18
MZ5948A	91	4.1	200	3000	0.25	1.0	69.2	16
MZ5949A	100	3.7	250	3100	0.25	1.0	76.0	15
MZ5950A	110	3.4	300	4000	0.25	1.0	83.6	13
MZ5951A	120	3.1	380	4500	0.25	1.0	91.2	12
MZ5952A	130	2.9	450	5000	0.25	1.0	98.8	11
MZ5953A	150	2.5	600	6000	0.25	1.0	114.0	10
MZ5954A	160	2.3	700	6500	0.25	1.0	121.6	9.0
MZ5955A	180	2.1	900	7000	0.25	1.0	136.8	8.0
MZ5956A	200	1.9	1200	8000	0.25	1.0	152.0	7.0

MZ5913A Series, 1.5 W, Case Type : M1A

Note : (1) Suffix "A" is for ± 10% tolerance. Use suffix "B" for ± 5% tolerance (Axial lead)

Zener Diodes 1.5 W

The plastic material carries U/L recognition 94V-0.

Type No.	Nominal Zener Voltage	Test Current	Maximum Zener Impedance			Maximum Reverse Leakage Current		Maximum DC Zener Current
	V_Z @ I_{ZT}	I_{ZT}	Z_{ZT} @ I_{ZT}	Z_{ZK} @ I_{ZK}	I_{ZK}	I_R @ V_R		I_{ZM}
	(V)	(mA)		(Ω)	(mA)	(μA)	(V)	(mA)
1SMA5913A Series, 1.5 W, Case Type : SMA								
1SMA5913A	3.3	113.6	10	500	1.0	100	1.0	454
1SMA5914A	3.6	104.2	9.0	500	1.0	75	1.0	416
1SMA5915A	3.9	96.1	7.5	500	1.0	25	1.0	384
1SMA5916A	4.3	87.2	6.0	500	1.0	5.0	1.0	348
1SMA5917A	4.7	79.8	5.0	500	1.0	5.0	1.5	319
1SMA5918A	5.1	73.5	4.0	500	1.0	5.0	2.0	294
1SMA5919A	5.6	66.9	2.0	500	1.0	5.0	3.0	267
1SMA5920A	6.2	60.5	2.0	200	1.0	5.0	4.0	241
1SMA5921A	6.8	55.1	2.5	200	1.0	5.0	5.2	220
1SMA5922A	7.5	50.0	3.0	400	0.5	5.0	6.0	200
1SMA5923A	8.2	45.7	3.5	400	0.5	5.0	6.5	182
1SMA5924A	9.1	41.2	4.0	500	0.5	5.0	7.0	164
1SMA5925A	10	37.5	4.5	500	0.25	5.0	8.0	150
1SMA5926A	11	34.1	5.5	550	0.25	1.0	8.4	136
1SMA5927A	12	31.2	6.5	550	0.25	1.0	9.1	125
1SMA5928A	13	28.8	7.0	550	0.25	1.0	9.9	115
1SMA5929A	15	25.0	9.0	600	0.25	1.0	11.4	100
1SMA5930A	16	23.4	10	600	0.25	1.0	12.2	93
1SMA5931A	18	20.8	12	650	0.25	1.0	13.7	83
1SMA5932A	20	18.7	14	650	0.25	1.0	15.2	75
1SMA5933A	22	17.0	17.5	650	0.25	1.0	16.7	68
1SMA5934A	24	15.6	19	700	0.25	1.0	18.2	62
1SMA5935A	27	13.9	23	700	0.25	1.0	20.6	55
1SMA5936A	30	12.5	26	750	0.25	1.0	22.8	50
1SMA5937A	33	11.4	33	800	0.25	1.0	25.1	45
1SMA5938A	36	10.4	38	850	0.25	1.0	27.4	41
1SMA5939A	39	9.6	45	900	0.25	1.0	29.7	38
1SMA5940A	43	8.7	53	950	0.25	1.0	32.7	34
1SMA5941A	47	8.0	67	1000	0.25	1.0	35.8	31
1SMA5942A	51	7.3	70	1100	0.25	1.0	38.8	29
1SMA5943A	56	6.7	86	1300	0.25	1.0	42.6	26
1SMA5944A	62	6.0	100	1500	0.25	1.0	47.1	24
1SMA5945A	68	5.5	120	1700	0.25	1.0	51.7	22
1SMA5946A	75	5.0	140	2000	0.25	1.0	56.0	20
1SMA5947A	82	4.6	160	2500	0.25	1.0	62.2	18
1SMA5948A	91	4.1	200	3000	0.25	1.0	69.2	16
1SMA5949A	100	3.7	250	3100	0.25	1.0	76.0	15
1SMA5950A	110	3.4	300	4000	0.25	1.0	83.6	13
1SMA5951A	120	3.1	380	4500	0.25	1.0	91.2	12
1SMA5952A	130	2.9	450	5000	0.25	1.0	98.8	11
1SMA5953A	150	2.5	600	6000	0.25	1.0	114.0	10
1SMA5954A	160	2.3	700	6500	0.25	1.0	121.6	9.0
1SMA5955A	180	2.1	900	7000	0.25	1.0	136.8	8.0
1SMA5956A	200	1.9	1200	8000	0.25	1.0	152.0	7.0
1SMA5957A	240	1.5	1600	9000	0.25	1.0	182.4	6.0

Notes: (1) Suffix "A" indicates ± 10% tolerance, change to suffix "B" for ± 5% tolerance.
(2) "1SMA5" will be omitted in marking on the diode.

Zener Diodes 2.0 W

The plastic material carries U/L recognition 94V-0.

Type No.		Nominal Zener Voltage		Maximum Zener Impedance			Maximum Reverse Leakage Current		Maximum DC Zener Current
		V_Z @ I_{ZT}	I_{ZT}	Z_{ZT} @ I_{ZT}	Z_{ZK} @ I_{ZK}	I_{ZK}	I_R @	V_R	I_{ZM}
Axial Lead	SMD	(V)	(mA)	(Ω)	(Ω)	(mA)	(μA)	(V)	(mA)
2EZ / SZ45 Series, 2.0 W, Case Type : DO-41/SMA									
2EZ2.7D5	**SZ452H**	2.7	80	10	400	1.0	100	1.0	660
2EZ3.0D5	**SZ453A**	3.0	160	8.0	400	1.0	100	1.0	600
2EZ3.3D5	**SZ453D**	3.3	145	8.0	400	1.0	80	1.0	545
2EZ3.6D5	**SZ453G**	3.6	139	5.0	400	1.0	80	1.0	504
2EZ3.9D5	**SZ453J**	3.9	128	5.0	400	1.0	30	1.0	468
2EZ4.3D5	**SZ454D**	4.3	116	4.5	400	1.0	20	1.0	434
2EZ4.7D5	**SZ454H**	4.7	106	4.5	550	1.0	5.0	1.0	386
2EZ5.1D5	**SZ455B**	5.1	98.0	3.5	600	1.0	5.0	1.0	356
2EZ5.6D5	**SZ455G**	5.6	89.5	2.5	500	1.0	5.0	2.0	324
2EZ6.2D5	**SZ456C**	6.2	80.5	1.5	700	1.0	5.0	3.0	292
2EZ6.8D5	**SZ456I**	6.8	73.5	2.0	700	1.0	5.0	4.0	266
2EZ7.5D5	**SZ457F**	7.5	66.5	2.0	700	0.5	5.0	5.0	242
2EZ8.2D5	**SZ458C**	8.2	61.0	2.3	700	0.5	5.0	6.0	220
2EZ9.1D5	**SZ459B**	9.1	55.0	2.5	700	0.5	3.0	7.0	200
2EZ10D5	**SZ4510**	10	50.0	3.5	700	0.25	3.0	7.6	182
2EZ11D5	**SZ4511**	11	45.5	4.0	700	0.25	1.0	8.4	166
2EZ12D5	**SZ4512**	12	41.5	4.5	700	0.25	1.0	9.1	152
2EZ13D5	**SZ4513**	13	38.5	5.0	700	0.25	0.5	9.9	138
2EZ14D5	**SZ4514**	14	35.7	5.5	700	0.25	0.5	10.6	130
2EZ15D5	**SZ4515**	15	33.4	7.0	700	0.25	0.5	11.4	122
2EZ16D5	**SZ4516**	16	31.2	8.0	700	0.25	0.5	12.2	114
2EZ17D5	**SZ4517**	17	29.4	9.0	750	0.25	0.5	13.0	107
2EZ18D5	**SZ4518**	18	27.8	10	750	0.25	0.5	13.7	100
2EZ19D5	**SZ4519**	19	26.3	11	750	0.25	0.5	14.4	95
2EZ20D5	**SZ4520**	20	25.0	11	750	0.25	0.5	15.2	90
2EZ22D5	**SZ4522**	22	22.8	12	750	0.25	0.5	16.7	82
2EZ24D5	**SZ4524**	24	20.8	13	750	0.25	0.5	18.2	76
2EZ27D5	**SZ4527**	27	18.5	18	750	0.25	0.5	20.6	68
2EZ30D5	**SZ4530**	30	16.6	20	1000	0.25	0.5	22.5	60
2EZ33D5	**SZ4533**	33	15.1	23	1000	0.25	0.5	25.1	55
2EZ36D5	**SZ4536**	36	13.9	25	1000	0.25	0.5	27.4	50
2EZ39D5	**SZ4539**	39	12.8	30	1000	0.25	0.5	29.7	47
2EZ43D5	**SZ4543**	43	11.6	35	1500	0.25	0.5	32.7	43
2EZ47D5	**SZ4547**	47	10.6	40	1500	0.25	0.5	35.8	39
2EZ51D5	**SZ4551**	51	9.8	48	1500	0.25	0.5	38.8	36
2EZ56D5	**SZ4556**	56	9.0	55	2000	0.25	0.5	42.6	32
2EZ62D5	**SZ4562**	62	8.1	60	2000	0.25	0.5	47.1	29
2EZ68D5	**SZ4568**	68	7.4	75	2000	0.25	0.5	51.7	27
2EZ75D5	**SZ4575**	75	6.7	90	2000	0.25	0.5	56.0	24
2EZ82D5	**SZ4582**	82	6.1	100	3000	0.25	0.5	62.2	22
2EZ91D5	**SZ4591**	91	5.5	125	3000	0.25	0.5	69.2	20
2EZ100D5	**SZ45B0**	100	5.0	175	3000	0.25	0.5	76.0	18
2EZ110D5	**SZ45B1**	110	4.5	250	4000	0.25	0.5	83.6	17
2EZ120D5	**SZ45B2**	120	4.2	325	4500	0.25	0.5	91.2	15
2EZ130D5	**SZ45B3**	130	3.8	400	5000	0.25	0.5	98.8	14
2EZ140D5	**SZ45B4**	140	3.6	500	5500	0.25	0.5	106.4	13
2EZ150D5	**SZ45B5**	150	3.3	575	6000	0.25	0.5	114.0	12
2EZ160D5	**SZ45B6**	160	3.1	650	6500	0.25	0.5	121.6	11
2EZ170D5	**SZ45B7**	170	2.9	675	7000	0.25	0.5	130.4	11
2EZ180D5	**SZ45B8**	180	2.8	725	7000	0.25	0.5	136.8	10
2EZ190D5	**SZ45B9**	190	2.6	825	8000	0.25	0.5	144.8	10
2EZ200D5	**SZ45D0**	200	2.5	900	8000	0.25	0.5	152.0	9.0
2EZ220D5	**SZ45D2**	220	2.0	2000	8500	0.25	0.5	167	8.0
2EZ270D5	**SZ45D7**	270	1.6	2200	8500	0.25	0.5	205	6.7
2EZ300D5	**SZ45E0**	300	1.5	2200	9000	0.25	0.5	228	5.9
2EZ330D5	**SZ45E3**	330	1.4	2300	9000	0.25	0.5	250	5.4

Notes :

(1) For $V_Z \le 200$ V; V_F = 1.2 Vmax. @ I_F = 200 mA and for V_Z > 200 V; VF = 2 Vmax. @ IF = 200 mA.

(2) Suffix "5" indicates ± 5% tolerance, suffix "10" indicates ± 10% tolerance (Axial lead) / replace the fourth digit of type from "0" for ± 10% tolerance to "5" for ± 5% tolerance (SMD)

(3) "EZ" for Axial Lead / "SZ" for SMD will be omitted on marking of the diode

Zener Diodes 2.0 W

The plastic material carries U/L recognition 94V-0.

Type No.	Zener Voltage[2] at I_{ZT}		Test Current	Dynamic resistance at I_{ZT}	Temp. coeff. of Zener Voltage at I_{ZT}	Maximum Reverse at I_R = 1 μA	Admissible Zener Current[1] at Ta = 25 °C
	V_Z (V)						
	min.	max.	I_{ZT} (mA)	max. rzj (Ω)	α_{VZ} (10^{-4}/K)	V_R (V)	I_Z (mA)
ZY3.6 Series, 2 W, Case Type : DO-41							
ZY3.6	3.4	3.8	100	7	-7…+2	-	440
ZY3.9	3.7	4.1	100	7	-7…+2	-	410
ZY4.3	4.0	4.6	100	7	-7…+3	-	360
ZY4.7	4.4	5.0	100	7	-7…+4	-	330
ZY5.1	4.8	5.4	100	5	-6…+5	-	300
ZY5.6	5.2	6.0	100	2	-3…+5	>1.5	275
ZY6.2	5.8	6.6	100	2	-1…+6	>1.5	245
ZY6.8	6.4	7.2	100	1	0…+7	>2.0	220
ZY7.5	7.0	7.9	100	1	0…+7	>2.0	200
ZY8.2	7.7	8.7	100	1	+3…+8	>3.5	180
ZY9.1	8.5	9.6	50	4	+3…+8	>7.4	165
ZY10	9.4	10.6	50	4	+5…+9	>8.2	145
ZY11	10.4	11.6	50	7	+5…+10	>9.2	135
ZY12	11.4	12.7	50	7	+5…+10	>10	120
ZY13	12.4	14.1	50	10	+5…+10	>10.7	110
ZY15	13.8	15.8	50	10	+5…+10	>12	98
ZY16	15.3	17.1	25	15	+6…+11	>13.3	90
ZY18	16.8	19.1	25	15	+6…+11	>14.7	80
ZY20	18.8	21.2	25	15	+6…+11	>16.5	72
ZY22	20.8	23.3	25	15	+6…+11	>18.3	66
ZY24	22.8	25.6	25	15	+6…+11	>20.1	60
ZY27	25.1	28.9	25	15	+6…+11	>22.5	53
ZY30	28	32	25	15	+6…+11	>25.1	48
ZY33	31	35	25	15	+6…+11	>27.8	44
ZY36	34	38	10	40	+6…+11	>30.2	40
ZY39	37	41	10	40	+6…+11	>32.9	37
ZY43	40	46	10	45	+7…+12	>35.6	33
ZY47	44	50	10	45	+7…+12	>39.2	30
ZY51	48	54	10	60	+7…+12	>42.8	27
ZY56	52	60	10	60	+7…+12	>47.3	25
ZY62	58	66	10	80	+8…+13	>51.7	21
ZY68	64	72	10	80	+8…+13	>57.1	20
ZY75	70	79	10	100	+8…+13	>63.2	18
ZY82	77	88	10	100	+8…+13	>68.6	16
ZY91	85	96	5	200	+9…+13	>75.7	15
ZY100	94	106	5	200	+9…+13	>83.7	13
ZY110	104	116	5	250	+9…+13	>92.6	12
ZY120	114	127	5	250	+9…+13	>101.6	11
ZY130	124	141	5	300	+9…+13	>110.5	10
ZY150	138	156	5	300	+9…+13	>123	9
ZY160	153	171	5	350	+9…+13	>136	8.5
ZY180	168	191	5	350	+9…+13	>149	8
ZY200	168	212	5	350	+9 … +13	>167	7.5



Notes :

(1) Valid provided that leads are kept at ambient temperature at a distance of 10 mm from case

(2) Tested with pulse tp = 5 ms

Zener Diodes 3.0 W

The plastic material carries U/L recognition 94V-0.

Type No.		Nominal Zener Voltage		Maximum Zener Impedance			Maximum Reverse Leakage Current		Maximum DC Zener Current
		V_Z @ I_{ZT}	I_{ZT}	Z_{ZT} @ I_{ZT}	Z_{ZK} @ I_{ZK}	I_{ZK}	I_R	@ V_R	I_{ZM}
Axial Lead	SMD	(V)	(mA)	(Ω)	(Ω)	(mA)	(μA)	(V)	(mA)
1N5913A/SZ303D Series, 3.0/1.5 W, Case Type : DO-41/SMA									
1N5913A	**SZ303D**	3.3	113.6	10.0	500	1.0	100	1.0	454
1N5914A	**SZ303G**	3.6	104.2	9.0	500	1.0	75	1.0	416
1N5915A	**SZ303J**	3.9	96.1	7.5	500	1.0	25	1.0	384
1N5916A	**SZ304D**	4.3	87.2	6.0	500	1.0	5.0	1.0	348
1N5917A	**SZ304H**	4.7	79.8	5.0	500	1.0	5.0	1.5	319
1N5918A	**SZ305B**	5.1	73.5	4.0	350	1.0	5.0	2.0	294
1N5919A	**SZ305G**	5.6	66.9	2.0	250	1.0	5.0	3.0	267
1N5920A	**SZ306C**	6.2	60.5	2.0	200	1.0	5.0	4.0	241
1N5921A	**SZ306I**	6.8	55.1	2.5	200	1.0	5.0	5.2	220
1N5922A	**SZ307F**	7.5	50.0	3.0	400	0.5	5.0	6.0	200
1N5923A	**SZ308C**	8.2	45.7	3.5	400	0.5	5.0	6.5	182
1N5924A	**SZ309B**	9.1	41.2	4.0	500	0.5	5.0	7.0	164
1N5925A	**SZ3010**	10	37.5	4.5	500	0.25	5.0	8.0	150
1N5926A	**SZ3011**	11	34.1	5.5	550	0.25	1.0	8.4	136
1N5927A	**SZ3012**	12	31.2	6.5	550	0.25	1.0	9.1	125
1N5928A	**SZ3013**	13	28.8	7.0	550	0.25	1.0	9.9	115
1N5929A	**SZ3015**	15	25.0	9.0	600	0.25	1.0	11.4	100
1N5930A	**SZ3016**	16	23.4	10	600	0.25	1.0	12.2	93
1N5931A	**SZ3018**	18	20.8	12	650	0.25	1.0	13.7	83
1N5932A	**SZ3020**	20	18.7	14	650	0.25	1.0	15.2	75
1N5933A	**SZ3022**	22	17.0	17.5	650	0.25	1.0	16.7	68
1N5934A	**SZ3024**	24	15.6	19	700	0.25	1.0	18.2	62
1N5935A	**SZ3027**	27	13.9	23	700	0.25	1.0	20.6	55
1N5936A	**SZ3030**	30	12.5	26	750	0.25	1.0	22.8	50
1N5937A	**SZ3033**	33	11.4	33	800	0.25	1.0	25.1	45
1N5938A	**SZ3036**	36	10.4	38	850	0.25	1.0	27.4	41
1N5939A	**SZ3039**	39	9.6	45	900	0.25	1.0	29.7	38
1N5940A	**SZ3043**	43	8.7	53	950	0.25	1.0	32.7	34
1N5941A	**SZ3047**	47	8.0	67	1000	0.25	1.0	35.8	31
1N5942A	**SZ3051**	51	7.3	70	1100	0.25	1.0	38.8	29
1N5943A	**SZ3056**	56	6.7	86	1300	0.25	1.0	42.6	26
1N5944A	**SZ3062**	62	6.0	100	1500	0.25	1.0	47.1	24
1N5945A	**SZ3068**	68	5.5	120	1700	0.25	1.0	51.7	22
1N5946A	**SZ3075**	75	5.0	140	2000	0.25	1.0	56.0	20
1N5947A	**SZ3082**	82	4.6	160	2500	0.25	1.0	62.2	18
1N5948A	**SZ3091**	91	4.1	200	3000	0.25	1.0	69.2	16
1N5949A	**SZ30B0**	100	3.7	250	3100	0.25	1.0	76.0	15
1N5950A	**SZ30B1**	110	3.4	300	4000	0.25	1.0	83.6	13
1N5951A	**SZ30B2**	120	3.1	380	4500	0.25	1.0	91.2	12
1N5952A	**SZ30B3**	130	2.9	450	5000	0.25	1.0	98.8	11
1N5953A	**SZ30B5**	150	2.5	600	6000	0.25	1.0	114.0	10
1N5954A	**SZ30B6**	160	2.3	700	6500	0.25	1.0	121.6	9.0
1N5955A	**SZ30B8**	180	2.1	900	7000	0.25	1.0	136.8	8.0
1N5956A	**SZ30D0**	200	1.9	1200	8000	0.25	1.0	152.0	7.0

Notes :

(1) V_F = 1.5 Vmax. @ I_F = 200mA

(2) Suffix "A" is for ± 10% tolerance. Use suffix "B" for ± 5% tolerance (Axial lead) / replace the fourth digit of type from "0" for ± 10% tolerance to "5" for ± 5% tolerance (SMD)

(3) "SZ" for SMD will be omitted on marking of the diode.

Zener Diodes 3.0 W

The plastic material carries U/L recognition 94V-0.

Type No.	Nominal Zener Voltage		Maximum Zener Impedance			Maximum Reverse Leakage Current		Maximum DC Zener Current
	V_Z @ I_{ZT}	I_{ZT}	Z_{ZT} @ I_{ZT}	Z_{ZK} @ I_{ZK}	I_{ZK}	I_R	@ V_R	I_{ZM}
Axial Lead	(V)	(mA)	(Ω)	(Ω)	(mA)	(μA)	(V)	(mA)

1SMB5913A Series, 3.0W, Case Type : SMB



1SMB5913A	3.3	113.6	10.0	500	1.0	100	1.0	454
1SMB5914A	3.6	104.2	9.0	500	1.0	75	1.0	416
1SMB5915A	3.9	96.1	7.5	500	1.0	25	1.0	384
1SMB5916A	4.3	87.2	6.0	500	1.0	5.0	1.0	348
1SMB5917A	4.7	79.8	5.0	500	1.0	5.0	1.5	319
1SMB5918A	5.1	73.5	4.0	350	1.0	5.0	2.0	294
1SMB5919A	5.6	66.9	2.0	250	1.0	5.0	3.0	267
1SMB5920A	6.2	60.5	2.0	200	1.0	5.0	4.0	241
1SMB5921A	6.8	55.1	2.5	200	1.0	5.0	5.2	220
1SMB5922A	7.5	50.0	3.0	400	0.5	5.0	6.0	200
1SMB5923A	8.2	45.7	3.5	400	0.5	5.0	6.5	182
1SMB5924A	9.1	41.2	4.0	500	0.5	5.0	7.0	164
1SMB5925A	10	37.5	4.5	500	0.25	5.0	8.0	150
1SMB5926A	11	34.1	5.5	550	0.25	1.0	8.4	136
1SMB5927A	12	31.2	6.5	550	0.25	1.0	9.1	125
1SMB5928A	13	28.8	7.0	550	0.25	1.0	9.9	115
1SMB5929A	15	25.0	9.0	600	0.25	1.0	11.4	100
1SMB5930A	16	23.4	10	600	0.25	1.0	12.2	93
1SMB5931A	18	20.8	12	650	0.25	1.0	13.7	83
1SMB5932A	20	18.7	14	650	0.25	1.0	15.2	75
1SMB5933A	22	17.0	17.5	650	0.25	1.0	16.7	68
1SMB5934A	24	15.6	19	700	0.25	1.0	18.2	62
1SMB5935A	27	13.9	23	700	0.25	1.0	20.6	55
1SMB5936A	30	12.5	26	750	0.25	1.0	22.8	50
1SMB5937A	33	11.4	33	800	0.25	1.0	25.1	45
1SMB5938A	36	10.4	38	850	0.25	1.0	27.4	41
1SMB5939A	39	9.6	45	900	0.25	1.0	29.7	38
1SMB5940A	43	8.7	53	950	0.25	1.0	32.7	34
1SMB5941A	47	8.0	67	1000	0.25	1.0	35.8	31
1SMB5942A	51	7.3	70	1100	0.25	1.0	38.8	29
1SMB5943A	56	6.7	86	1300	0.25	1.0	42.6	26
1SMB5944A	62	6.0	100	1500	0.25	1.0	47.1	24
1SMB5945A	68	5.5	120	1700	0.25	1.0	51.7	22
1SMB5946A	75	5.0	140	2000	0.25	1.0	56.0	20
1SMB5947A	82	4.6	160	2500	0.25	1.0	62.2	18
1SMB5948A	91	4.1	200	3000	0.25	1.0	69.2	16
1SMB5949A	100	3.7	250	3100	0.25	1.0	76.0	15
1SMB5950A	110	3.4	300	4000	0.25	1.0	83.6	13
1SMB5951A	120	3.1	380	4500	0.25	1.0	91.2	12
1SMB5952A	130	2.9	450	5000	0.25	1.0	98.8	11
1SMB5953A	150	2.5	600	6000	0.25	1.0	114.0	10
1SMB5954A	160	2.3	700	6500	0.25	1.0	121.6	9.0
1SMB5955A	180	2.1	900	7000	0.25	1.0	136.8	8.0
1SMB5956A	200	1.9	1200	8000	0.25	1.0	152.0	7.0

Notes :

(1) V_F = 1.5 Vmax. @ I_F = 200mA

(2) Suffix "A" is for ± 10% tolerance. Use suffix "B" for ± 5% tolerance.

(3) "SMB59" for SMD will be omitted on marking of the diode.

Zener Diodes 3.0 W

The plastic material carries U/L recognition 94V-0.

Type No.		Nominal Zener Voltage		Maximum Zener Impedance			Maximum Reverse Leakage Current		Maximum DC Zener Current
		V_Z @ I_{ZT}	I_{ZT}	Z_{ZT} @ I_{ZT}	Z_{ZK} @ I_{ZK}	I_{ZK}	I_R @	V_R	I_{ZM}
Axial Lead	SMD	(V)	(mA)	(Ω)	(Ω)	(mA)	(μA)	(V)	(mA)
3EZ / SZ55 Series, 3.0 W, Case Type : DO-41/SMA									
3EZ3.9D5	**SZ553J**	3.9	192	4.5	400	1.0	80	1.0	630
3EZ4.3D5	**SZ554D**	4.3	174	4.5	400	1.0	30	1.0	590
3EZ4.7D5	**SZ554H**	4.7	160	4.0	500	1.0	20	1.0	550
3EZ5.1D5	**SZ555B**	5.1	147	3.5	550	1.0	5.0	1.0	520
3EZ5.6D5	**SZ555G**	5.6	134	2.5	600	1.0	5.0	2.0	480
3EZ6.2D5	**SZ556C**	6.2	121	1.5	700	1.0	5.0	3.0	435
3EZ6.8D5	**SZ556I**	6.8	110	2.0	700	1.0	5.0	4.0	393
3EZ7.5D5	**SZ557F**	7.5	100	2.0	700	0.5	5.0	5.0	360
3EZ8.2D5	**SZ558C**	8.2	91	2.3	700	0.5	5.0	6.0	330
3EZ9.1D5	**SZ559B**	9.1	82	2.5	700	0.5	5.0	7.0	297
3EZ10D5	**SZ5510**	10	75	3.5	700	0.25	3.0	7.6	270
3EZ11D5	**SZ5511**	11	68	4.0	700	0.25	3.0	8.4	225
3EZ12D5	**SZ5512**	12	63	4.5	700	0.25	1.0	9.1	246
3EZ13D5	**SZ5513**	13	58	4.5	700	0.25	0.5	9.9	208
3EZ14D5	**SZ5514**	14	53	5.0	700	0.25	0.5	10.6	193
3EZ15D5	**SZ5515**	15	50	5.5	700	0.25	0.5	11.4	180
3EZ16D5	**SZ5516**	16	47	5.5	700	0.25	0.5	12.2	169
3EZ17D5	**SZ5517**	17	44	6.0	750	0.25	0.5	13.0	159
3EZ18D5	**SZ5518**	18	42	6.0	750	0.25	0.5	13.7	150
3EZ19D5	**SZ5519**	19	40	7.0	750	0.25	0.5	14.4	142
3EZ20D5	**SZ5520**	20	37	7.0	750	0.25	0.5	15.2	135
3EZ22D5	**SZ5522**	22	34	8.0	750	0.25	0.5	16.7	123
3EZ24D5	**SZ5524**	24	31	9.0	750	0.25	0.5	18.2	112
3EZ27D5	**SZ5527**	27	28	10	750	0.25	0.5	20.6	100
3EZ28D5	**SZ5528**	28	27	12	750	0.25	0.5	21.0	96
3EZ30D5	**SZ5530**	30	25	16	1000	0.25	0.5	22.5	90
3EZ33D5	**SZ5533**	33	23	20	1000	0.25	0.5	25.1	82
3EZ36D5	**SZ5536**	36	21	22	1000	0.25	0.5	27.4	75
3EZ39D5	**SZ5539**	39	19	28	1000	0.25	0.5	29.7	69
3EZ43D5	**SZ5543**	43	17	33	1500	0.25	0.5	32.7	63
3EZ47D5	**SZ5547**	47	16	38	1500	0.25	0.5	35.6	57
3EZ51D5	**SZ5551**	51	15	45	1500	0.25	0.5	38.8	53
3EZ56D5	**SZ5556**	56	13	50	2000	0.25	0.5	42.6	48
3EZ62D5	**SZ5562**	62	12	55	2000	0.25	0.5	47.1	44
3EZ68D5	**SZ5568**	68	11	70	2000	0.25	0.5	51.7	40
3EZ75D5	**SZ5575**	75	10	85	2000	0.25	0.5	56.0	36
3EZ82D5	**SZ5582**	82	9.1	95	3000	0.25	0.5	62.2	33
3EZ91D5	**SZ5591**	91	8.2	115	3000	0.25	0.5	69.2	30
3EZ100D5	**SZ55B0**	100	7.5	160	3000	0.25	0.5	76.0	27
3EZ110D5	**SZ55B1**	110	6.8	225	4000	0.25	0.5	83.6	25
3EZ120D5	**SZ55B2**	120	6.3	300	4500	0.25	0.5	91.2	22
3EZ130D5	**SZ55B3**	130	5.8	375	5000	0.25	0.5	98.8	21
3EZ140D5	**SZ55B4**	140	5.3	475	5000	0.25	0.5	106.4	19
3EZ150D5	**SZ55B5**	150	5.0	550	6000	0.25	0.5	114.0	18
3EZ160D5	**SZ55B6**	160	4.7	625	6500	0.25	0.5	121.6	17
3EZ170D5	**SZ55B7**	170	4.4	650	7000	0.25	0.5	130.4	16
3EZ180D5	**SZ55B8**	180	4.2	700	7000	0.25	0.5	136.8	15
3EZ190D5	**SZ55B9**	190	4.0	800	8000	0.25	0.5	144.8	14
3EZ200D5	**SZ55D0**	200	3.7	875	8000	0.25	0.5	152.0	13

Notes :

(1) V_F = 1.5 Vmax. @ I_F = 200mA.

(2) Suffix "5" indicates ± 5% tolerance, suffix "10" indicates ± 10% tolerance (Axial lead) / replace the fourth digit of type from "0" for ± 10% tolerance to "5" for ± 5% tolerance (SMD)

(3) " 3EZ" for Axial Lead / "SZ " for SMD will be omitted on marking of the diode

Zener Diodes 3.0 W

The plastic material carries U/L recognition 94V-0.

Type No.	Working Voltage			Test Current	Differental Resistance		Temperature Coefficient		Maximum Reverse Leakage Current	
	V_Z @ I_Z			I_Z	rdiff(Ω) at I_Z		S_Z (%/K) at I_Z		I_R @ V_R	
	Min.	Nom.	Max.	(mA)	Typ.	Max.	Min.	Max.	(μA)	(V)
BZG03-C Series, 3 W, Case Type : SMA										
BZG03-C10	9.4	10	10.6	50	2	4	0.05	0.09	7.0	7.5
BZG03-C11	10.4	11	11.6	50	4	7	0.05	0.10	4.0	8.2
BZG03-C12	11.4	12	12.7	50	4	7	0.05	0.10	3.0	9.1
BZG03-C13	12.4	13	14.1	50	5	10	0.05	0.10	2.0	10
BZG03-C15	13.8	15	15.6	50	5	10	0.05	0.10	1.0	11
BZG03-C16	15.3	16	17.1	25	6	15	0.05	0.11	1.0	12
BZG03-C18	16.8	18	19.1	25	6	15	0.06	0.11	1.0	13
BZG03-C20	18.8	20	21.2	25	6	15	0.06	0.11	1.0	15
BZG03-C22	20.8	22	23.3	25	6	15	0.06	0.11	1.0	16
BZG03-C24	22.8	24	25.6	25	7	15	0.06	0.11	1.0	18
BZG03-C27	25.1	27	28.9	25	7	15	0.06	0.11	1.0	20
BZG03-C30	28	30	32	25	8	15	0.06	0.11	1.0	22
BZG03-C33	31	33	35	25	8	15	0.06	0.11	1.0	24
BZG03-C36	34	36	38	10	21	40	0.06	0.11	1.0	27
BZG03-C39	37	39	41	10	21	40	0.06	0.11	1.0	30
BZG03-C43	40	43	46	10	24	45	0.07	0.12	1.0	33
BZG03-C47	44	47	50	10	24	45	0.07	0.12	1.0	36
BZG03-C51	48	51	54	10	25	60	0.07	0.12	1.0	39
BZG03-C56	52	56	60	10	25	60	0.07	0.12	1.0	43
BZG03-C62	58	62	66	10	25	80	0.08	0.13	1.0	47
BZG03-C68	64	68	72	10	25	80	0.08	0.13	1.0	51
BZG03-C75	70	75	79	10	30	100	0.08	0.13	1.0	56
BZG03-C82	77	82	87	10	30	100	0.08	0.13	1.0	62
BZG03-C91	85	91	96	5.0	60	200	0.09	0.13	1.0	68
BZG03-C100	94	100	106	5.0	60	200	0.09	0.13	1.0	75
BZG03-C110	104	110	116	5.0	80	250	0.09	0.13	1.0	82
BZG03-C120	114	120	127	5.0	80	250	0.09	0.13	1.0	91
BZG03-C130	124	130	141	5.0	110	300	0.09	0.13	1.0	100
BZG03-C150	138	150	156	5.0	130	300	0.09	0.13	1.0	110
BZG03-C160	153	160	171	5.0	150	350	0.09	0.13	1.0	120
BZG03-C180	168	180	191	5.0	180	400	0.09	0.13	1.0	130
BZG03-C200	188	200	212	5.0	200	500	0.09	0.13	1.0	150
BZG03-C220	208	220	233	2.0	350	750	0.09	0.13	1.0	160
BZG03-C240	228	240	256	2.0	400	850	0.09	0.13	1.0	180
BZG03-C270	251	270	289	2.0	450	1000	0.09	0.13	1.0	200



Note : (1) "BZG03-" will be omitted in marking on the diode, e.g. p/n BZG03-C10 marking "C10".

Zener Diodes 3.0 W

The plastic material carries U/L recognition 94V-0.

Type No.	Standoff Voltage		Min. Breakdown Voltage		T_{KVZ} @ I_R		Max. Clamping Voltage		Typical Junction Capacitance
	V_R	$I_{R(max)}$	$V_{(BR)}$ @ I_R		(% / K)		$V_{CL(R)}$ @ I_{PP}	@ I_{ZT}	@ V_R = 0 V, f = 1MHz
	V	(μA)	V	mA	typ	Max	$V^{(1)}$	$A^{(1)}$	C_J (pF)
BZG04- Series, 3 W, Case Type : SMA									
BZG04-8V2	8.2	20	9.4	50	0.05	0.09	14.8	20.3	1200
BZG04-9V1	9.1	5	10.4	50	0.05	0.10	15.7	19.1	1100
BZG04-10	10	5	11.4	50	0.05	0.10	17.0	17.7	1000
BZG04-11	11	5	12.4	50	0.05	0.10	18.9	15.9	850
BZG04-12	12	5	13.8	50	0.05	0.11	20.9	14.4	815
BZG04-13	13	5	15.3	25	0.06	0.11	22.9	13.1	785
BZG04-15	15	5	16.8	25	0.06	0.11	25.6	11.7	710
BZG04-16	16	5	18.8	25	0.06	0.11	28.4	10.6	655
BZG04-18	18	5	20.8	25	0.06	0.11	31.0	9.7	610
BZG04-20	20	5	22.8	25	0.06	0.11	33.8	8.9	570
BZG04-22	22	5	25.1	25	0.06	0.11	38.1	7.9	545
BZG04-24	24	5	28	25	0.06	0.11	42.2	7.1	505
BZG04-27	27	5	31	25	0.06	0.11	46.2	6.5	475
BZG04-30	30	5	34	10	0.06	0.11	50.1	6.0	450
BZG04-33	33	5	37	10	0.06	0.11	54.1	5.5	420
BZG04-36	36	5	40	10	0.07	0.12	60.7	4.9	390
BZG04-39	39	5	44	10	0.07	0.12	65.5	4.6	370
BZG04-43	43	5	48	10	0.07	0.12	70.8	4.2	350
BZG04-47	47	5	52	10	0.07	0.12	78.6	3.8	330
BZG04-51	51	5	58	10	0.08	0.13	86.5	3.5	310
BZG04-56	56	5	64	10	0.08	0.13	94.4	3.2	291
BZG04-62	62	5	70	10	0.08	0.13	103.5	2.9	280
BZG04-68	68	5	77	10	0.08	0.13	114	2.6	275
BZG04-75	75	5	85	5	0.09	0.13	126	2.4	260
BZG04-82	82	5	94	5	0.09	0.13	139	2.2	250
BZG04-91	91	5	104	5	0.09	0.13	152	2.0	243
BZG04-100	100	5	114	5	0.09	0.13	167	1.8	170
BZG04-110	110	5	124	5	0.09	0.13	185	1.6	153
BZG04-120	120	5	138	5	0.09	0.13	204	1.5	150
BZG04-130	130	5	153	5	0.09	0.13	224	1.3	145
BZG04-150	150	5	168	5	0.09	0.13	249	1.2	140
BZG04-160	160	5	188	5	0.09	0.13	276	1.1	135
BZG04-180	180	5	208	2	0.09	0.13	305	1.0	131
BZG04-200	200	5	228	2	0.09	0.13	336	0.9	122
BZG04-220	220	5	251	2	0.09	0.13	380	0.8	120

Note : (1) "BZG0 - " will be omitted in marking on the diode, e.g. p/n BZG04-8V2 marking "48V2".

Zener Diodes 3.0 W

The plastic material carries U/L recognition 94V-0.

Type No.	Zener Voltage V_Z @ I_{ZT}			Test Current	Maximum Dynamic Resistance		Test Current	Temp. coefficient of Zener Voltage @I_{ZT}		Maximum Reverse Leakage Current	
	Min	typ	Max	I_{ZT}	r_{zjT} @ I_{ZK}	r_{zjK} @ I_{ZK}	I_{ZK}	(% / K)		I_R @	V_R
	(V)	(V)	(V)	(mA)	(Ω)	(Ω)	(mA)	Min	Max	(μA)	(V)

BZG05C Series, 3 W, Case Type : SMA



BZG05C3V3	3.1	3.3	3.5	80	20	400	1.0	-0.08	0.05	40	1.0
BZG05C3V6	3.4	3.6	3.8	60	20	500	1.0	-0.08	-0.05	20	1.0
BZG05C3V9	3.7	3.9	4.1	60	15	500	1.0	-0.07	-0.02	10	1.0
BZG05C4V3	4.0	4.3	4.6	50	13	500	1.0	-0.07	-0.01	3.0	1.0
BZG05C4V7	4.4	4.7	5.0	45	13	600	1.0	-0.03	0.040	3.0	1.0
BZG05C5V1	4.8	5.1	5.4	45	10	500	1.0	-0.01	0.040	1.0	1.5
BZG05C5V6	5.2	5.6	6.0	45	7.0	400	1.0	0.00	0.045	1.0	2.0
BZG05C6V2	5.8	6.2	6.6	35	4.0	300	1.0	0.010	0.055	1.0	3.0
BZG05C6V8	6.4	6.8	7.2	35	3.5	300	1.0	0.015	0.060	1.0	4.0
BZG05C7V5	7.0	7.5	7.9	35	3.0	200	0.5	0.020	0.065	1.0	4.5
BZG05C8V2	7.7	8.2	8.7	25	5.0	200	0.5	0.030	0.070	1.0	6.2
BZG05C9V1	8.5	9.1	9.6	25	5.0	200	0.5	0.035	0.075	1.0	6.8
BZG05C10	9.4	10	10.6	25	7.0	200	0.5	0.040	0.080	0.5	7.0
BZG05C11	10.4	11	11.6	20	8.0	300	0.5	0.045	0.080	0.5	8.2
BZG05C12	11.4	12	12.7	20	9.0	350	0.5	0.045	0.085	0.5	9.1
BZG05C13	12.4	13	14.1	20	10	400	0.5	0.050	0.085	0.5	10
BZG05C15	13.8	15	15.6	15	15	500	0.5	0.055	0.090	0.5	11
BZG05C16	15.3	16	17.1	15	15	500	0.5	0.055	0.090	0.5	12
BZG05C18	16.8	18	19.1	15	20	500	0.5	0.060	0.090	0.5	13
BZG05C20	18.8	20	21.2	10	24	600	0.5	0.060	0.090	0.5	15
BZG05C22	20.8	22	23.3	10	25	600	0.5	0.060	0.095	0.5	16
BZG05C24	22.8	24	25.6	10	25	600	0.5	0.060	0.095	0.5	18
BZG05C27	25.1	27	28.9	8	30	750	0.25	0.060	0.095	0.5	20
BZG05C30	28	30	32	8	30	1000	0.25	0.060	0.095	0.5	22
BZG05C33	31	33	35	8	35	1000	0.25	0.060	0.095	0.5	24
BZG05C36	34	36	38	8	40	1000	0.25	0.060	0.095	0.5	27
BZG05C39	37	39	41	6	50	1000	0.25	0.060	0.095	0.5	30
BZG05C43	40	43	46	6	50	1000	0.25	0.060	0.095	0.5	33
BZG05C47	44	47	50	4	90	1500	0.25	0.060	0.095	0.5	36
BZG05C51	48	51	54	4	115	1500	0.25	0.060	0.095	0.5	39
BZG05C56	52	56	60	4	120	2000	0.25	0.060	0.095	0.5	43
BZG05C62	58	62	66	4	125	2000	0.25	0.060	0.095	0.5	47
BZG05C68	64	68	72	4	130	2000	0.25	0.060	0.095	0.5	51
BZG05C75	70	75	79	4	135	2000	0.25	0.060	0.095	0.5	56
BZG05C82	77	82	87	2.7	200	3000	0.25	0.060	0.095	0.5	62
BZG05C91	85	91	96	2.7	250	3000	0.25	0.060	0.095	0.5	68
BZG05C100	95	100	106	2.7	350	3000	0.25	0.060	0.095	0.5	75

Note : (1) "BZG0 C " will be omitted in marking on the diode, e.g. p/n BZG05C3V3 marking "53V3".

Zener Diodes 5.0 W

The plastic material carries U/L recognition 94V-0.

Type No.		Nominal Zener Voltage		Maximum Zener Impedance			Maximum Reverse Leakage Current			Maximum DC. Zener Current
		V_Z @ I_{ZT}	I_{ZT}	Z_{ZT} @ I_{ZT}	Z_{ZK} @ I_{ZK}	I_{ZK}	I_R @ V_R (V)			I_{ZM}
Axial Lead	SMD	(V)	(mA)	(Ω)	(Ω)	(mA)	(μA)	Suffix "A"	Suffix "B"	(mA)
1N5333A/SZ60 Series, 5 W, Case Type : DO-15/SMB										
1N5338A	**SZ605B**	5.1	240	1.5	400	1.0	1.0	1.0	1.0	930
1N5339A	**SZ605G**	5.6	220	1.0	400	1.0	1.0	2.0	2.0	856
1N5340A	**SZ606A**	6.0	200	1.0	300	1.0	1.0	3.0	3.0	790
1N5341A	**SZ606C**	6.2	200	1.0	200	1.0	1.0	3.0	3.0	765
1N5342A	**SZ606I**	6.8	175	1.0	200	1.0	10	4.9	5.2	700
1N5343A	**SZ607F**	7.5	175	1.5	200	1.0	10	5.4	5.7	630
1N5344A	**SZ608C**	8.2	150	1.5	200	1.0	10	5.9	6.2	580
1N5345A	**SZ608H**	8.7	150	2.0	200	1.0	10	6.25	6.6	545
1N5346A	**SZ609B**	9.1	150	2.0	150	1.0	7.5	6.6	6.9	520
1N5347A	**SZ6010**	10	125	2.0	125	1.0	5.0	7.2	7.6	475
1N5348A	**SZ6011**	11	125	2.5	125	1.0	5.0	8.0	8.4	430
1N5349A	**SZ6012**	12	100	2.5	125	1.0	2.0	8.6	9.1	395
1N5350A	**SZ6013**	13	100	2.5	100	1.0	1.0	9.4	9.9	365
1N5351A	**SZ6014**	14	100	2.5	75	1.0	1.0	10.1	10.6	340
1N5352A	**SZ6015**	15	75	2.5	75	1.0	1.0	10.8	11.5	315
1N5353A	**SZ6016**	16	75	2.5	75	1.0	1.0	11.5	12.2	295
1N5354A	**SZ6017**	17	70	2.5	75	1.0	0.5	12.2	12.9	280
1N5355A	**SZ6018**	18	65	2.5	75	1.0	0.5	13.0	13.7	265
1N5356A	**SZ6019**	19	65	8.0	75	1.0	0.5	13.7	14.4	250
1N5357A	**SZ6020**	20	65	3.0	75	1.0	0.5	14.4	15.2	237
1N5358A	**SZ6022**	22	50	3.5	75	1.0	0.5	15.8	16.7	216
1N5359A	**SZ6024**	24	50	3.5	100	1.0	0.5	17.3	18.2	198
1N5360A	**SZ6025**	25	50	4.0	110	1.0	0.5	18.0	19.0	190
1N5361A	**SZ6027**	27	50	5.0	120	1.0	0.5	19.4	20.6	176
1N5362A	**SZ6028**	28	50	6.0	130	1.0	0.5	20.1	21.2	170
1N5363A	**SZ6030**	30	40	8.0	140	1.0	0.5	21.6	22.8	158
1N5364A	**SZ6033**	33	40	10	150	1.0	0.5	23.8	25.1	144
1N5365A	**SZ6036**	36	30	11	160	1.0	0.5	25.9	27.4	132
1N5366A	**SZ6039**	39	30	14	170	1.0	0.5	28.1	29.7	122
1N5367A	**SZ6043**	43	30	20	190	1.0	0.5	31.0	32.7	110
1N5368A	**SZ6047**	47	25	25	210	1.0	0.5	33.8	35.8	100
1N5369A	**SZ6051**	51	25	27	230	1.0	0.5	36.7	38.8	93.0
1N5370A	**SZ6056**	56	20	35	280	1.0	0.5	40.3	42.6	86.0
1N5371A	**SZ6060**	60	20	40	350	1.0	0.5	43.0	45.5	79.0
1N5372A	**SZ6062**	62	20	42	400	1.0	0.5	44.6	47.1	76.0
1N5373A	**SZ6068**	68	20	44	500	1.0	0.5	49.0	51.7	70.0
1N5374A	**SZ6075**	75	20	45	620	1.0	0.5	54.0	56.0	63.0
1N5375A	**SZ6082**	82	15	65	720	1.0	0.5	59.0	62.2	58.0
1N5376A	**SZ6087**	87	15	75	760	1.0	0.5	63.0	66.0	54.5
1N5377A	**SZ6091**	91	15	75	760	1.0	0.5	65.5	69.2	52.5
1N5378A	**SZ60B0**	100	12	90	800	1.0	0.5	72.0	76.0	47.5
1N5379A	**SZ60B1**	110	12	125	1000	1.0	0.5	79.2	83.6	43.0
1N5380A	**SZ60B2**	120	10	170	1150	1.0	0.5	86.4	91.2	39.5
1N5381A	**SZ60B3**	130	10	190	1250	1.0	0.5	93.2	98.8	36.6
1N5382A	**SZ60B4**	140	8.0	230	1500	1.0	0.5	101	106	34.0
1N5383A	**SZ60B5**	150	8.0	330	1500	1.0	0.5	108	114	31.6
1N5384A	**SZ60B6**	160	8.0	350	1650	1.0	0.5	115	122	29.4
1N5385A	**SZ60B7**	170	8.0	380	1750	1.0	0.5	122	129	28.0
1N5386A	**SZ60B8**	180	5.0	430	1750	1.0	0.5	130	137	26.4
1N5387A	**SZ60B9**	190	5.0	450	1850	1.0	0.5	137	144	25.0
1N5388A	**SZ60D0**	200	5.0	480	1850	1.0	0.5	144	152	23.6

Notes :

(1) V_F = 1.2 Vmax. @ I_F = 1 A(3.3V to 200V)

(2) V_F = 2.0 Vmax. @ I_F = 1 A(220V to 240V)

(3) Use suffix "A" for ± 10% tolerance and suffix "B" for ± 5% tolerance (Axial lead) / replace the fourth digit of type from "0" for ± 10% tolerance to "5" for ± 5% tolerance (SMD).

(4) "SZ" for SMD will be omitted on marking of the diode

Zener Diodes 5.0 W

The plastic material carries U/L recognition 94V-0.

Type No.	Nominal Zener Voltage		Maximum Zener Impedance			Maximum Reverse Leakage Current		Maximum DC. Zener Current
	V_Z @ I_{ZT}	I_{ZT}	Z_{ZT} @ I_{ZT}	Z_{ZK} @ I_{ZK}	I_{ZK}	I_R @	V_R	I_{ZM}
	(V)	(mA)	(Ω)	(Ω)	(mA)	(μA)	(V)	(mA)

1N4954 Series, 5 W, Case Type : DO-15



1N4954	6.8	175	1.0	1000	1.0	150	5.2	29.3
1N4955	7.5	175	1.5	800	1.0	100	5.7	26.4
1N4956	8.2	150	1.5	600	1.0	50	6.2	24.0
1N4957	9.1	150	2.0	400	1.0	25	6.9	22.0
1N4958	10	125	2.0	125	1.0	25.0	7.6	20.0
1N4959	11	125	2.5	130	1.0	10.0	8.4	19.0
1N4960	12	100	2.5	140	1.0	10.0	9.1	18.0
1N4961	13	100	3.0	145	1.0	10.0	9.9	16.0
1N4962	15	75	3.5	150	1.0	5.0	11.4	12.0
1N4963	16	75	3.5	155	1.0	5.0	12.2	10.0
1N4964	18	65	4.0	160	1.0	5.0	13.7	9.0
1N4965	20	65	4.5	165	1.0	2.0	15.2	8.0
1N4966	22	50	5.0	170	1.0	2.0	16.7	7.0
1N4967	24	50	5.0	175	1.0	2.0	18.2	6.5
1N4968	27	50	6.0	180	1.0	2.0	20.6	6.0
1N4969	30	40	8.0	190	1.0	2.0	22.8	5.5
1N4970	33	40	10	200	1.0	2.0	25.1	5.0
1N4971	36	30	11	220	1.0	2.0	27.4	4.5
1N4972	39	30	14	230	1.0	2.0	29.7	4.0
1N4973	43	30	20	240	1.0	2.0	32.7	3.5
1N4974	47	25	25	250	1.0	2.0	35.8	3.2
1N4975	51	25	27	270	1.0	2.0	38.8	3.0
1N4976	56	20	35	320	1.0	2.0	42.6	2.8
1N4977	62	20	42	400	1.0	2.0	47.1	2.5
1N4978	68	20	50	500	1.0	2.0	51.7	2.2
1N4979	75	20	55	620	1.0	2.0	56.0	2.0
1N4980	82	15	80	720	1.0	2.0	62.2	1.8
1N4981	91	15	90	760	1.0	2.0	69.2	1.6
1N4982	100	12	110	800	1.0	2.0	76.0	1.4
1N4983	110	12	125	1000	1.0	2.0	83.6	1.2
1N4984	120	10	170	1150	1.0	2.0	91.2	1.00
1N4985	130	10	190	1250	1.0	2.0	98.8	0.80
1N4986	150	8	330	1500	1.0	2.0	114	0.75
1N4987	160	8	350	1650	1.0	2.0	121.6	0.70
1N4988	180	5	450	1750	1.0	2.0	136.8	0.60
1N4989	200	5	500	1850	1.0	2.0	152	0.50

Notes :

(1) Maximum voltage change Δ_{VZ} between 10% of I_{ZM} and 50% of I_{ZM}

(2) Standard voltage tolerance is ± 5%

Zener Diodes 5.0 W

The plastic material carries U/L recognition 94V-0.

Type No.	Nominal Zener Voltage	Test Current	Maximum Zener Impedance			Maximum Reverse Leakage Current			Maximum DC Zener Current
	V_Z @ I_{ZT}	I_{ZT}	Z_{ZT} @ I_{ZT}	Z_{ZK} @ I_{ZK}	I_{ZK}	I_R @ V_R (V)			I_{ZM}
	(V)	(mA)	(Ω)	(Ω)	(mA)	(μA)	Suffix "A"	Suffix "B"	(mA)
SMBJ5333A Series, 5 W, Case Type : SMB									
SMBJ5338A	5.1	240	1.5	400	1.0	1.0	1.0	1.0	930
SMBJ5339A	5.6	220	1.0	400	1.0	1.0	2.0	2.0	856
SMBJ5340A	6.0	200	1.0	300	1.0	1.0	3.0	3.0	790
SMBJ5341A	6.2	200	1.0	200	1.0	1.0	3.0	3.0	765
SMBJ5342A	6.8	175	1.0	200	1.0	10	4.9	5.2	700
SMBJ5343A	7.5	175	1.0	200	1.0	10	5.4	5.7	630
SMBJ5344A	8.2	150	1.0	200	1.0	10	5.9	6.2	580
SMBJ5345A	8.7	150	1.0	200	1.0	10	6.25	6.6	545
SMBJ5346A	9.1	150	2.0	150	1.0	7.5	6.6	6.9	520
SMBJ5347A	10	125	2.0	125	1.0	5.0	7.2	7.6	475
SMBJ5348A	11	125	2.0	125	1.0	5.0	8.0	8.4	430
SMBJ5349A	12	100	2.5	125	1.0	2.0	8.6	9.1	395
SMBJ5350A	13	100	2.5	100	1.0	1.0	9.4	9.9	365
SMBJ5351A	14	100	2.5	75	1.0	1.0	10.1	10.6	340
SMBJ5352A	15	75	2.5	75	1.0	1.0	10.8	11.5	315
SMBJ5353A	16	75	2.5	75	1.0	1.0	11.5	12.2	295
SMBJ5354A	17	70	2.5	75	1.0	0.5	12.2	12.9	280
SMBJ5355A	18	65	2.5	75	1.0	0.5	13.0	13.7	265
SMBJ5356A	19	65	3.0	75	1.0	0.5	13.7	14.4	250
SMBJ5357A	20	65	3.0	75	1.0	0.5	14.4	15.2	237
SMBJ5358A	22	50	3.5	75	1.0	0.5	15.8	16.7	216
SMBJ5359A	24	50	3.5	100	1.0	0.5	17.3	18.2	198
SMBJ5360A	25	50	4.0	110	1.0	0.5	18.0	19.0	190
SMBJ5361A	27	50	5.0	120	1.0	0.5	19.4	20.6	176
SMBJ5362A	28	50	6.0	130	1.0	0.5	20.1	21.2	170
SMBJ5363A	30	40	8.0	140	1.0	0.5	21.6	22.8	158
SMBJ5364A	33	40	10	150	1.0	0.5	23.8	25.1	144
SMBJ5365A	36	30	11	160	1.0	0.5	25.9	27.4	132
SMBJ5366A	39	30	14	170	1.0	0.5	28.1	29.7	122
SMBJ5367A	43	30	20	190	1.0	0.5	31.0	32.7	110
SMBJ5368A	47	25	25	210	1.0	0.5	33.8	35.8	100
SMBJ5369A	51	25	27	230	1.0	0.5	36.7	38.8	93.0
SMBJ5370A	56	20	35	280	1.0	0.5	40.3	42.6	86.0
SMBJ5371A	60	20	40	350	1.0	0.5	43.0	45.5	79.0
SMBJ5372A	62	20	42	400	1.0	0.5	44.6	47.1	76.0
SMBJ5373A	68	20	44	500	1.0	0.5	49.0	51.7	70.0
SMBJ5374A	75	20	45	620	1.0	0.5	54.0	56.0	63.0
SMBJ5375A	82	15	65	720	1.0	0.5	59.0	62.2	58.0
SMBJ5376A	87	15	75	760	1.0	0.5	63.0	66.0	54.5
SMBJ5377A	91	15	75	760	1.0	0.5	65.5	69.2	52.5
SMBJ5378A	100	12	90	800	1.0	0.5	72.0	76.0	47.5
SMBJ5379A	110	12	125	1000	1.0	0.5	79.2	83.6	43.0
SMBJ5380A	120	10	170	1150	1.0	0.5	86.4	91.2	39.5
SMBJ5381A	130	10	190	1250	1.0	0.5	93.2	98.8	36.6
SMBJ5382A	140	8.0	230	1500	1.0	0.5	101	106	34.0
SMBJ5383A	150	8.0	330	1500	1.0	0.5	108	114	31.6
SMBJ5384A	160	8.0	350	1650	1.0	0.5	115	122	29.4
SMBJ5385A	170	8.0	380	1750	1.0	0.5	122	129	28.0
SMBJ5386A	180	5.0	430	1750	1.0	0.5	130	137	26.4
SMBJ5387A	190	5.0	450	1850	1.0	0.5	137	144	25.0
SMBJ5388A	200	5.0	480	1850	1.0	0.5	144	152	23.6

Note : Suffix "A" indicates ± 10% tolerance, change to suffix "B" for ± 5% tolerance. "SMBJ53" will be omitted on marking of the diode.

Transient Voltage Suppressor Diodes

The plastic material carries U/L recognition 94V-0.

Type No.	Breakdown Voltage @ I_T			Working Peak Reverse Voltage	Maximum Reverse Leakage @ V_{WM}	Maximum Peak Pulse Surge Current	Maximum Clamping Voltage @ I_{PPM}
	V_{BR} (V)		I_T	V_{WM}	I_R	I_{PPM}	V_C
Unidirectional	Min.	Max.	(mA)	(V)	(μA)	(A)	(V)

TGL34 Series, 150W, Case Type: Mini MELF (Plastic)



TGL34-6.8	6.12	7.48	10	5.5	1000	10.8	13.9
TGL34-6.8A	6.45	7.14	10	5.8	1000	10.5	14.3
TGL34-7.5	6.75	8.25	10	6.0	500	11.7	12.8
TGL34-7.5A	7.13	7.88	10	6.4	500	11.3	13.3
TGL34-8.2	7.38	9.02	10	6.6	200	12.5	12.0
TGL34-8.2A	7.79	8.61	10	7.0	200	12.1	12.4
TGL34-9.1	8.19	10.0	1.0	7.3	50	13.8	10.9
TGL34-9.1A	8.65	9.55	1.0	7.7	50	13.4	11.2
TGL34-10	9.0	11.0	1.0	8.1	10	15.0	10.0
TGL34-10A	9.5	10.5	1.0	8.5	10	14.5	10.3
TGL34-11	9.9	12.1	1.0	8.9	5	16.2	9.3
TGL34-11A	10.5	11.6	1.0	9.4	5	15.6	9.6
TGL34-12	10.8	13.2	1.0	9.7	5	17.3	8.7
TGL34-12A	11.4	12.6	1.0	10.2	5	16.7	9.0
TGL34-13	11.7	14.3	1.0	10.5	5	19.0	7.9
TGL34-13A	12.4	13.7	1.0	11.1	5	18.2	8.2
TGL34-15	13.5	16.5	1.0	12.1	5	22.0	6.8
TGL34-15A	14.3	15.8	1.0	12.8	5	21.2	7.1
TGL34-16	14.4	17.6	1.0	12.9	5	23.5	6.4
TGL34-16A	15.2	16.8	1.0	13.6	5	22.5	6.7
TGL34-18	16.2	19.8	1.0	14.5	5	26.5	5.7
TGL34-18A	17.1	18.9	1.0	15.3	5	25.2	6.0
TGL34-20	18.0	22.0	1.0	16.2	5	29.1	5.2
TGL34-20A	19.0	21.0	1.0	17.1	5	27.7	5.4
TGL34-22	19.8	24.2	1.0	17.8	5	31.9	4.7
TGL34-22A	20.9	23.1	1.0	18.8	5	30.6	4.9
TGL34-24	21.6	26.4	1.0	19.4	5	34.7	4.3
TGL34-24A	22.8	25.2	1.0	20.5	5	33.2	4.5
TGL34-27	24.3	29.7	1.0	21.8	5	39.1	3.8
TGL34-27A	25.7	28.4	1.0	23.1	5	37.5	4.0
TGL34-30	27.0	30.0	1.0	24.3	5	43.5	3.4
TGL34-30A	28.5	31.5	1.0	25.6	5	41.4	3.6
TGL34-33	29.7	36.3	1.0	26.8	5	47.7	3.1
TGL34-33A	31.4	34.7	1.0	28.2	5	45.7	3.3
TGL34-36	32.4	39.6	1.0	29.1	5	52.0	2.9
TGL34-36A	34.2	37.8	1.0	30.8	5	49.9	3.0
TGL34-39	35.1	42.9	1.0	31.6	5	56.4	2.7
TGL34-39A	37.1	41.0	1.0	33.3	5	53.9	2.8

Note : (1) For bidirectional use suffix "C" or "CA"

Transient Voltage Suppressor Diodes

The plastic material carries U/L recognition 94V-0.

Type No.	Breakdown Voltage @ I_T			Working Peak Reverse Voltage	Maximum Reverse Leakage @ V_{WM}	Maximum Peak Pulse Surge Current	Maximum Clamping Voltage @ I_{PPM}
	V_{BR} (V)		I_T	V_{WM}	I_R	I_{PPM}	V_C
Unidirectional	Min.	Max.	(mA)	(V)	(μA)	(A)	(V)
TGL34 Series, 150W, Case Type: Mini MELF (Plastic)							
TGL34-43	38.7	47.3	1.0	34.8	5	61.9	2.4
TGL34-43A	40.9	45.2	1.0	36.8	5	59.3	2.5
TGL34-47	42.3	51.7	1.0	38.1	5	67.8	2.2
TGL34-47A	44.7	49.4	1.0	40.2	5	64.8	2.3
TGL34-51	45.9	56.1	1.0	41.3	5	73.5	2.0
TGL34-51A	48.5	53.6	1.0	43.6	5	70.1	2.1
TGL34-56	50.4	61.6	1.0	45.4	5	81	1.9
TGL34-564A	53.2	58.8	1.0	47.8	5	77	1.9
TGL34-62	55.8	68.8	1.0	50.2	5	89	1.7
TGL34-62A	58.9	65.1	1.0	53.0	5	85	1.8
TGL34-68	61.2	74.8	1.0	55.1	5	98	1.5
TGL34-68A	64.6	71.4	1.0	58.1	5	92	1.6
TGL34-75	67.5	82.5	1.0	60.7	5	108	1.4
TGL34-75A	71.3	78.8	1.0	64.1	5	103	1.5
TGL34-82	73.8	90.2	1.0	66.4	5	118	1.3
TGL34-82A	77.9	86.1	1.0	70.1	5	113	1.3
TGL34-91	81.9	100	1.0	73.7	5	131	1.1
TGL34-91A	86.5	95.5	1.0	77.8	5	125	1.2
TGL34-100	90	110	1.0	81.0	5	144	1.0
TGL34-100A	95	105	1.0	85.5	5	137	1.1
TGL34-110	99	121	1.0	89.2	5	158	0.9
TGL34-110A	105	116	1.0	94.0	5	152	1.0
TGL34-120	108	132	1.0	97.2	5	173	0.9
TGL34-120A	114	126	1.0	102	5	165	0.9
TGL34-130	117	143	1.0	105	5	187	0.8
TGL34-130A	124	137	1.0	111	5	179	0.8
TGL34-150	135	165	1.0	121	5	215	0.7
TGL34-150A	143	158	1.0	128	5	207	0.7
TGL34-160	144	176	1.0	130	5	230	0.7
TGL34-160A	152	168	1.0	136	5	219	0.7
TGL34-170	153	187	1.0	138	5	244	0.6
TGL34-170A	162	179	1.0	145	5	234	0.6
TGL34-180	162	198	1.0	146	5	258	0.6
TGL34-180A	171	189	1.0	154	5	246	0.6
TGL34-200	180	220	1.0	162	5	287	0.5
TGL34-200A	190	210	1.0	171	5	274	0.5



Note : (1) For bidirectional use suffix "C" or "CA"

Transient Voltage Suppressor Diodes

The plastic material carries U/L recognition 94V-0.

Type No.	Working Peak Reverse Voltage[1]	Breakdown Voltage @ I_T			Test Current	Max. Reverse Leakage Current	Max. Clamping Voltage at I_{PP}	Max. Reverse Peak Pulse Current [3]
	V_{RWM}	V_{BR} @ I_T			I_T	I_R @ V_{RWM}	V_C	I_{PP}
	(V)	Min	Nom	Max.	(mA)	(μA)	(V)	(mA)
SMF5.0A Series, 200W, Case Type: SOD-123FL								
SMF5.0A	5.0	6.40	6.70	7.00	10	400	9.2	21.7
SMF6.0A	6.0	6.67	7.02	7.37	10	400	10.3	19.4
SMF6.5A	6.5	7.22	7.60	7.98	10	250	11.2	17.9
SMF7.0A	7.0	7.78	8.20	8.60	10	100	12.0	16.7
SMF7.5A	7.5	8.33	8.77	9.21	1.0	50	12.9	15.5
SMF8.0A	8.0	8.89	9.36	9.83	1.0	25	13.6	14.7
SMF8.5A	8.5	9.44	9.92	10.4	1.0	10	14.4	13.9
SMF9.0A	9.0	10.0	10.55	11.1	1.0	5.0	15.4	13.0
SMF10A	10	11.1	11.70	12.3	1.0	2.5	17.0	11.8
SMF11A	11	12.2	12.85	13.5	1.0	2.5	18.2	11.0
SMF12A	12	13.3	14.00	14.7	1.0	2.5	19.9	10.1
SMF13A	13	14.4	15.15	15.9	1.0	1.0	21.5	9.3
SMF14A	14	15.6	16.40	17.2	1.0	1.0	23.2	8.6
SMF15A	15	16.7	17.60	18.5	1.0	1.0	24.4	8.2
SMF16A	16	17.8	18.75	19.7	1.0	1.0	26.0	7.7
SMF17A	17	18.9	19.90	20.9	1.0	1.0	27.6	7.2
SMF18A	18	20.0	21.00	22.1	1.0	1.0	29.2	6.8
SMF20A	20	22.2	23.35	24.5	1.0	1.0	32.4	6.2
SMF22A	22	24.4	25.60	26.9	1.0	1.0	35.5	5.6
SMF24A	24	26.7	28.10	29.5	1.0	1.0	38.9	5.1
SMF26A	26	28.9	30.40	31.9	1.0	1.0	42.1	4..8
SMF28A	28	31.1	32.80	34.4	1.0	1.0	45.4	4.4
SMF30A	30	33.3	35.10	36.8	1.0	1.0	48.4	4.1
SMF33A	33	36.7	38.70	40.6	1.0	1.0	53.3	3.8
SMF36A	36	40.0	42.10	44.2	1.0	1.0	58.1	3.4
SMF40A	40	44.4	46.80	49.1	1.0	1.0	64.5	3.1
SMF43A	43	47.8	50.30	52.8	1.0	1.0	69.4	2.9
SMF45A	45	50.0	52.65	55.3	1.0	1.0	72.7	2.8
SMF48A	48	53.3	56.10	58.9	1.0	1.0	77.4	2.6
SMF51A	51	56.7	59.70	62.7	1.0	1.0	82.4	2.4
SMF54A	54	60.0	63.15	66.3	1.0	1.0	87.1	2.3
SMF58A	58	64.4	67.80	71.2	1.0	1.0	93.6	2.1
SMF60A	60	66.7	70.20	73.7	1.0	1.0	96.8	1.8
SMF64A	64	71.1	74.85	78.6	1.0	1.0	103	1.7
SMF70A	70	77.8	81.90	86.0	1.0	1.0	113	1.5
SMF75A	75	83.3	87.70	92.1	1.0	1.0	121	1.4
SMF78A	78	86.7	91.25	95.8	1.0	1.0	126	1.4
SMF85A	85	94.4	99.20	104	1.0	1.0	137	1.3
SMF90A	90	100	105.50	111	1.0	1.0	146	1.2
SMF100A	100	111	117.00	123	1.0	1.0	162	1.1
SMF110A	110	122	128.50	135	1.0	1.0	177	1.0
SMF120A	120	133	140.00	147	1.0	1.0	193	0.9
SMF130A	130	144	151.50	159	1.0	1.0	209	0.8
SMF150A	150	167	176.00	185	1.0	1.0	243	0.7
SMF160A	160	178	187.50	197	1.0	1.0	259	0.7
SMF170A	170	189	199.00	209	1.0	1.0	275	0.6

Note : (1) A transient suppressor is normally selected according to the Working Peak Reverse Voltage (V_{RWM}) which should be equal to or greater than the DC or continuous peak operating voltage level.

Transient Voltage Suppressor Diodes

The plastic material carries U/L recognition 94V-0.

Type No.		Breakdown Voltage @ It (Note 1)			Working Peak Reverse Voltage	Maximum Reverse Leakage @ V_{RWM}	Maximum Reverse Current	Maximum Clamping Voltage @ I_{RSM}	Maximum Temperature Coefficient of V_{BR}
Unidirectional		V_{BR} (V)		It	V_{RWM}	I_R	I_{RSM}	V_{RSM}	
Axial Lead	SMD	Min.	Max.	(mA)	(V)	(μA)	(A)	(V)	(% / °C)
BZW04P5V8	**STUB06I**	6.45	7.48	10	5.80	1000	38.0	10.5	0.057
BZW04-5V8	**STUB56I**	6.45	7.14	10	5.80	1000	38.0	10.5	0.057
BZW04P6V4	**STUB07F**	7.13	8.25	10	6.40	500	35.4	11.3	0.061
BZW04-6V4	**STUB57F**	7.13	7.88	10	6.40	500	35.4	11.3	0.061
BZW04P7V0	**STUB08C**	7.79	9.02	10	7.02	200	33.0	12.1	0.065
BZW04-7V0	**STUB58C**	7.79	8.61	10	7.02	200	33.0	12.1	0.065
BZW04P7V8	**STUB09B**	8.65	10.0	1.0	7.78	50	30.0	13.4	0.068
BZW04-7V8	**STUB59B**	8.65	9.55	1.0	7.78	50	30.0	13.4	0.068
BZW04P8V5	**STUB010**	9.50	11.0	1.0	8.55	10	27.6	14.5	0.073
BZW04-8V5	**STUB510**	9.50	10.5	1.0	8.55	10	27.6	14.5	0.073
BZW04P9V4	**STUB011**	10.5	12.1	1.0	9.40	5.0	25.7	15.6	0.075
BZW04 9V4	**STUB511**	10.5	11.6	1.0	9.40	5.0	25.7	15.6	0.075
BZW04P10	**STUB012**	11.4	13.2	1.0	10.2	5.0	24.0	16.7	0.078
BZW04-10	**STUB512**	11.4	12.6	1.0	10.2	5.0	24.0	16.7	0.078
BZW04P11	**STUB013**	12.4	14.3	1.0	11.1	5.0	22.0	18.2	0.081
BZW04-11	**STUB513**	12.4	13.7	1.0	11.1	5.0	22.0	18.2	0.081
BZW04P13	**STUB015**	14.3	16.5	1.0	12.8	5.0	19.0	21.2	0.084
BZW04-13	**STUB515**	14.3	15.8	1.0	12.8	5.0	19.0	21.2	0.084
BZW04P14	**STUB016**	15.2	17.6	1.0	13.6	5.0	17.8	22.5	0.086
BZW04-14	**STUB516**	15.2	16.8	1.0	13.6	5.0	17.8	22.5	0.086
BZW04P15	**STUB018**	17.1	19.8	1.0	15.3	5.0	16.0	25.2	0.088
BZW04-15	**STUB518**	17.1	18.9	1.0	15.3	5.0	16.0	25.2	0.088
BZW04P17	**STUB020**	19.0	22.0	1.0	17.1	5.0	14.5	27.7	0.090
BZW04-17	**STUB520**	19.0	21.0	1.0	17.1	5.0	14.5	27.7	0.090
BZW04P19	**STUB022**	20.9	24.2	1.0	18.8	5.0	13.0	30.6	0.092
BZW04-19	**STUB522**	20.9	23.1	1.0	18.8	5.0	13.0	30.6	0.092
BZW04P20	**STUB024**	22.8	26.4	1.0	20.5	5.0	12.0	33.2	0.094
BZW04-20	**STUB524**	22.8	25.2	1.0	20.5	5.0	12.0	33.2	0.094
BZW04P23	**STUB027**	25.7	29.7	1.0	23.1	5.0	10.7	37.5	0.096
BZW04-23	**STUB527**	25.7	28.4	1.0	23.1	5.0	10.7	37.5	0.096
BZW04P26	**STUB030**	28.5	33.0	1.0	25.6	5.0	9.6	41.5	0.097
BZW04-26	**STUB530**	28.5	31.5	1.0	25.6	5.0	9.6	41.5	0.097
BZW04P28	**STUB033**	31.4	36.3	1.0	28.2	5.0	8.8	45.7	0.098
BZW04-28	**STUB533**	31.4	34.7	1.0	28.2	5.0	8.8	45.7	0.098
BZW04P31	**STUB036**	34.2	39.6	1.0	30.8	5.0	8.0	49.9	0.099
BZW04-31	**STUB536**	34.2	37.8	1.0	30.8	5.0	8.0	49.9	0.099
BZW04P33	**STUB039**	37.1	42.9	1.0	33.3	5.0	7.4	53.9	0.100
BZW04-33	**STUB539**	37.1	41.0	1.0	33.3	5.0	7.4	53.9	0.100
BZW04P37	**STUB043**	40.9	47.3	1.0	36.8	5.0	6.7	59.3	0.101
BZW04-37	**STUB543**	40.9	45.2	1.0	36.8	5.0	6.7	59.3	0.101
BZW04P40	**STUB047**	44.7	51.7	1.0	40.2	5.0	6.2	64.8	0.101
BZW04-40	**STUB547**	44.7	49.4	1.0	40.2	5.0	6.2	64.8	0.101
BZW04P44	**STUB051**	48.5	56.1	1.0	43.6	5.0	5.7	70.1	0.102
BZW04-44	**STUB551**	48.5	53.6	1.0	43.6	5.0	5.7	70.1	0.102
BZW04P48	**STUB056**	53.2	61.6	1.0	47.8	5.0	5.2	77.0	0.103
BZW04-48	**STUB556**	53.2	58.8	1.0	47.8	5.0	5.2	77.0	0.103
BZW04P53	**STUB062**	58.9	68.2	1.0	53.0	5.0	4.7	85.0	0.104
BZW04-53	**STUB562**	58.9	65.1	1.0	53.0	5.0	4.7	85.0	0.104

BZW04 / STUB Series, 400W, Case Type: DO-41/SMA



Transient Voltage Suppressor Diodes

The plastic material carries U/L recognition 94V-0.

Type No.		Breakdown Voltage @ It (Note 1)			Working Peak Reverse Voltage	Maximum Reverse Leakage @ V_{RWM}	Maximum Reverse Current	Maximum Clamping Voltage @ I_{RSM}	Maximum Temperature Coefficient of V_{BR}
Unidirectional		V_{BR} (V)		It	V_{RWM}	I_R	I_{RSM}	V_{RSM}	
Axial Lead	SMD	Min.	Max.	(mA)	(V)	(μA)	(A)	(V)	(% / °C)
BZW04 / STUB Series, 400W, Case Type: DO-41/SMA									
BZW04P58	**STUB068**	64.6	74.8	1.0	58.1	5.0	4.3	92.0	0.104
BZW04-58	**STUB568**	64.6	71.4	1.0	58.1	5.0	4.3	92.0	0.104
BZW04P64	**STUB075**	71.3	82.5	1.0	64.1	5.0	3.9	103	0.105
BZW04-64	**STUB575**	71.3	78.8	1.0	64.1	5.0	3.9	103	0.105
BZW04P70	**STUB082**	77.9	90.2	1.0	70.1	5.0	3.5	113	0.105
BZW04-70	**STUB582**	77.9	86.1	1.0	70.1	5.0	3.5	113	0.105
BZW04P78	**STUB091**	86.5	100	1.0	77.8	5.0	3.2	125	0.106
BZW04-78	**STUB591**	86.5	95.5	1.0	77.8	5.0	3.2	125	0.106
BZW04P85	**STUB0B0**	95.0	110	1.0	85.5	5.0	2.9	137	0.106
BZW04-85	**STUB5B0**	95.0	105	1.0	85.5	5.0	2.9	137	0.106
BZW04P94	**STUB0B1**	105	121	1.0	94.0	5.0	2.6	152	0.107
BZW04-94	**STUB5B1**	105	116	1.0	94.0	5.0	2.6	152	0.107
BZW04P102	**STUB0B2**	114	132	1.0	102	5.0	2.4	165	0.107
BZW04-102	**STUB5B2**	114	126	1.0	102	5.0	2.4	165	0.107
BZW04P111	**STUB0B3**	124	143	1.0	111	5.0	2.2	179	0.107
BZW04-111	**STUB5B3**	124	137	1.0	111	5.0	2.2	179	0.107
BZW04P128	**STUB0B5**	143	165	1.0	128	5.0	2.0	207	0.108
BZW04-128	**STUB5B5**	143	158	1.0	128	5.0	2.0	207	0.108
BZW04P136	**STUB0B6**	152	176	1.0	136	5.0	1.8	219	0.108
BZW04-136	**STUB5B6**	152	168	1.0	136	5.0	1.8	219	0.108
BZW04P145	**STUB0B7**	161	187	1.0	145	5.0	1.7	234	0.108
BZW04-145	**STUB5B7**	161	179	1.0	145	5.0	1.7	234	0.108
BZW04P154	**STUB0B8**	171	198	1.0	154	5.0	1.6	246	0.108
BZW04-154	**STUB5B8**	171	189	1.0	154	5.0	1.6	246	0.108
BZW04P171	**STUB0D0**	190	220	1.0	171	5.0	1.5	274	0.108
BZW04-171	**STUB5D0**	190	210	1.0	171	5.0	1.5	274	0.108
BZW04P188	**STUB0D2**	209	242	1.0	188	5.0	1.4	301	0.108
BZW04-188	**STUB5D2**	209	231	1.0	188	5.0	1.4	301	0.108
BZW04P213	**STUB0D5**	237	275	1.0	213	5.0	1.3	344	0.110
BZW04-213	**STUB5D5**	237	263	1.0	213	5.0	1.3	344	0.110
BZW04P239	**STUB0D8**	266	308	1.0	239	5.0	1.3	384	0.110
BZW04-239	**STUB5D8**	266	294	1.0	239	5.0	1.3	384	0.110
BZW04P256	**STUB0E0**	285	330	1.0	256	5.0	1.2	414	0.110
BZW04-256	**STUB5E0**	285	315	1.0	256	5.0	1.2	414	0.110
BZW04P273	**STUB0E2**	304	352	1.0	273	5.0	1.2	438	0.110
BZW04-273	**STUB5E2**	304	336	1.0	273	5.0	1.2	438	0.110
BZW04P299	**STUB0E5**	332	385	1.0	299	5.0	0.9	482	0.110
BZW04-299	**STUB5E5**	332	368	1.0	299	5.0	0.9	482	0.110
BZW04P342	**STUB0G0**	380	440	1.0	342	5.0	0.9	548	0.110
BZW04-342	**STUB5G0**	380	420	1.0	342	5.0	0.9	548	0.110
BZW04P376	**STUB0G4**	418	484	1.0	376	5.0	0.8	603	0.110
BZW04-376	**STUB5G4**	418	462	1.0	376	5.0	0.8	603	0.110

Notes:

(1) V_{BR} measured after It applied for 300 μs, It = square wave pulse or equivalent

(2) V_F = 3.5 Vmax., I_F = 25 A (6.8 V to 110 V)
V_F = 5.0 Vmax., I_F = 25 A (120 V to 400 V) per 1/2 square or equivalent sine wave
PW = 8.3 ms, duty cycle = 4 pulses per minute maximum

(3) For bidirectional use "B" suffix (Axial Lead) / replace the third digit of type from "U" to "B" (SMD)

(4) "ZW04" for Axial lead / "STU" or "STB" for SMD will be omitted on marking of the diode

(5) For bidirectional types having V_R of 10 V and under, the IR limit is doubled

Transient Voltage Suppressor Diodes

The plastic material carries U/L recognition 94V-0.

Type No.		Breakdown Voltage @ It (Note 1)			Working Peak Reverse Voltage	Maximum Reverse Leakage @ V_{RWM}	Maximum Reverse Current	Maximum Clamping Voltage @ I_{RSM}	Maximum Temperature Coefficient of V_{BR}
Unidirectional		V_{BR} (V)		It	V_{RWM}	I_R	I_{RSM}	V_{RSM}	
Axial Lead	SMD	Min.	Max.	(mA)	(V)	(μA)	(A)	(V)	(% / °C)

P4KE / STUP Series, 400W, Case Type: DO-41/SMA





P4KE6.8	**STUP06I**	6.12	7.48	10	5.50	1000	38.0	10.8	0.057
P4KE6.8A	**STUP56I**	6.45	7.14	10	5.80	1000	40.0	10.5	0.057
P4KE7.5	**STUP07F**	6.75	8.25	10	6.05	500	36.0	11.7	0.061
P4KE7.5A	**STUP57F**	7.13	7.88	10	6.40	500	37.0	11.3	0.061
P4KE8.2	**STUP08C**	7.38	9.02	10	6.63	200	33.0	12.5	0.065
P4KE8.2A	**STUP58C**	7.79	8.61	10	7.02	200	35.0	12.1	0.065
P4KE9.1	**STUP09B**	8.19	10.0	1.0	7.37	50	30.0	13.8	0.068
P4KE9.1A	**STUP59B**	8.65	9.55	1.0	7.78	50	31.0	13.4	0.068
P4KE10	**STUP010**	9.00	11.0	1.0	8.10	10	28.0	15.0	0.073
P4KE10A	**STUP510**	9.50	10.5	1.0	8.55	10	29.0	14.5	0.073
P4KE11	**STUP011**	9.90	12.1	1.0	8.92	5.0	26.0	16.2	0.075
P4KE11A	**STUP511**	10.5	11.6	1.0	9.40	5.0	27.0	15.6	0.075
P4KE12	**STUP012**	10.8	13.2	1.0	9.72	5.0	24.0	17.3	0.078
P4KE12A	**STUP512**	11.4	12.6	1.0	10.2	5.0	25.0	16.7	0.078
P4KE13	**STUP013**	11.7	14.3	1.0	10.5	5.0	22.0	19.0	0.081
P4KE13A	**STUP513**	12.4	13.7	1.0	11.1	5.0	23.0	18.2	0.081
P4KE15	**STUP015**	13.5	16.5	1.0	12.1	5.0	19.0	22.0	0.084
P4KE15A	**STUP515**	14.3	15.8	1.0	12.8	5.0	20.0	21.2	0.084
P4KE16	**STUP016**	14.4	17.6	1.0	12.9	5.0	18.0	23.5	0.086
P4KE16A	**STUP516**	15.2	16.8	1.0	13.6	5.0	19.0	22.5	0.086
P4KE17	**STUP017**	15.3	18.7	1.0	13.7	5.0	17.0	25.0	0.087
P4KE17A	**STUP517**	16.2	17.9	1.0	14.5	5.0	18.0	24.0	0.087
P4KE18	**STUP018**	16.2	19.8	1.0	14.5	5.0	16.0	26.5	0.088
P4KE18A	**STUP518**	17.1	18.9	1.0	15.3	5.0	17.0	25.5	0.088
P4KE20	**STUP020**	18.0	22.0	1.0	16.2	5.0	14.0	29.1	0.090
P4KE20A	**STUP520**	19.0	21.0	1.0	17.1	5.0	15.0	27.7	0.090
P4KE22	**STUP022**	19.8	24.2	1.0	17.8	5.0	13.0	31.9	0.092
P4KE22A	**STUP522**	20.9	23.1	1.0	18.8	5.0	14.0	30.6	0.092
P4KE24	**STUP024**	21.6	26.4	1.0	19.4	5.0	12.0	34.7	0.094
P4KE24A	**STUP524**	22.8	25.2	1.0	20.5	5.0	13.0	33.2	0.094
P4KE27	**STUP027**	24.3	29.7	1.0	21.8	5.0	11.0	39.1	0.096
P4KE27A	**STUP527**	25.7	28.4	1.0	23.1	5.0	11.2	37.5	0.096
P4KE30	**STUP030**	27.0	33.0	1.0	24.3	5.0	10.0	43.5	0.097
P4KE30A	**STUP530**	28.5	31.5	1.0	25.6	5.0	10.0	41.4	0.097
P4KE33	**STUP033**	29.7	36.3	1.0	26.8	5.0	9.0	47.7	0.098
P4KE33A	**STUP533**	31.4	34.7	1.0	28.2	5.0	9.0	45.7	0.098
P4KE36	**STUP036**	32.4	39.6	1.0	29.1	5.0	8.0	52.0	0.099
P4KE36A	**STUP536**	34.2	37.8	1.0	30.8	5.0	8.4	49.9	0.099
P4KE39	**STUP039**	35.1	42.9	1.0	31.6	5.0	7.4	56.4	0.100
P4KE39A	**STUP539**	37.1	41.0	1.0	33.3	5.0	7.8	53.9	0.100
P4KE43	**STUP043**	38.7	47.3	1.0	34.8	5.0	6.8	61.9	0.101
P4KE43A	**STUP543**	40.9	45.2	1.0	36.8	5.0	7.1	59.3	0.101
P4KE47	**STUP047**	42.3	51.7	1.0	38.1	5.0	6.2	67.8	0.101
P4KE47A	**STUP547**	44.7	49.4	1.0	40.2	5.0	6.5	64.8	0.101
P4KE51	**STUP051**	45.9	56.1	1.0	41.3	5.0	5.7	73.5	0.102
P4KE51A	**STUP551**	48.5	53.6	1.0	43.6	5.0	6.0	70.1	0.102
P4KE56	**STUP056**	50.4	61.6	1.0	45.4	5.0	5.2	80.5	0.103
P4KE56A	**STUP556**	53.2	58.8	1.0	47.8	5.0	5.5	77.0	0.103

Transient Voltage Suppressor Diodes

The plastic material carries U/L recognition 94V-0.

Type No.		Breakdown Voltage @ It (Note 1)			Working Peak Reverse Voltage	Maximum Reverse Leakage @ V_{RWM}	Maximum Reverse Current	Maximum Clamping Voltage @ I_{RSM}	Maximum Temperature Coefficient of V_{BR}
Unidirectional		V_{BR} (V)		It	V_{RWM}	I_R	I_{RSM}	V_{RSM}	
Axial Lead	SMD	Min.	Max.	(mA)	(V)	(μA)	(A)	(V)	(% / °C)

P4KE / STUP Series, 400W, Case Type: DO-41/SMA





P4KE62	**STUP062**	55.8	68.2	1.0	50.2	5.0	4.7	89.0	0.104
P4KE62A	**STUP562**	58.9	65.1	1.0	53.0	5.0	5.0	85.0	0.104
P4KE68	**STUP068**	61.2	74.8	1.0	55.1	5.0	4.3	98.0	0.104
P4KE68A	**STUP568**	64.6	71.4	1.0	58.1	5.0	4.6	92.0	0.104
P4KE75	**STUP075**	67.5	82.5	1.0	60.7	5.0	3.9	108	0.105
P4KE75A	**STUP575**	71.3	78.8	1.0	64.1	5.0	4.1	103	0.105
P4KE82	**STUP082**	73.8	90.2	1.0	66.4	5.0	3.6	118	0.105
P4KE82A	**STUP582**	77.9	86.1	1.0	70.1	5.0	3.7	113	0.105
P4KE91	**STUP091**	81.9	100	1.0	73.7	5.0	3.2	131	0.106
P4KE91A	**STUP591**	86.5	95.5	1.0	77.8	5.0	3.4	125	0.106
P4KE100	**STUP0B0**	90.0	110	1.0	81	5.0	2.9	144	0.106
P4KE100A	**STUP5B0**	95.0	105	1.0	85.5	5.0	3.1	137	0.106
P4KE110	**STUP0B1**	99.0	121	1.0	89.2	5.0	2.7	158	0.107
P4KE110A	**STUP5B1**	105	116	1.0	94.0	5.0	2.8	152	0.107
P4KE120	**STUP0B2**	108	132	1.0	97.2	5.0	2.4	173	0.107
P4KE120A	**STUP5B2**	114	126	1.0	102	5.0	2.5	165	0.107
P4KE130	**STUP0B3**	117	143	1.0	105	5.0	2.2	187	0.107
P4KE130A	**STUP5B3**	124	137	1.0	111	5.0	2.3	179	0.107
P4KE150	**STUP0B5**	135	165	1.0	121	5.0	2.0	215	0.108
P4KE150A	**STUP5B5**	143	158	1.0	128	5.0	2.0	207	0.108
P4KE160	**STUP0B6**	144	176	1.0	130	5.0	1.8	230	0.108
P4KE160A	**STUP5B6**	152	168	1.0	136	5.0	1.9	219	0.108
P4KE170	**STUP0B7**	153	187	1.0	138	5.0	1.7	244	0.108
P4KE170A	**STUP5B7**	162	179	1.0	145	5.0	1.8	234	0.108
P4KE180	**STUP0B8**	162	198	1.0	146	5.0	1.6	258	0.108
P4KE180A	**STUP5B8**	171	189	1.0	154	5.0	1.7	246	0.108
P4KE200	**STUP0D0**	180	220	1.0	162	5.0	1.5	287	0.108
P4KE200A	**STUP5D0**	190	210	1.0	171	5.0	1.53	274	0.108
P4KE220	**STUP0D2**	198	242	1.0	175	5.0	1.16	344	0.108
P4KE220A	**STUP5D2**	209	231	1.0	185	5.0	1.22	328	0.108
P4KE250	**STUP0D5**	225	275	1.0	202	5.0	1.11	360	0.110
P4KE250A	**STUP5D5**	237	263	1.0	214	5.0	1.16	344	0.110
P4KE300	**STUP0E0**	270	330	1.0	243	5.0	0.93	430	0.110
P4KE300A	**STUP5E0**	285	315	1.0	256	5.0	0.97	414	0.110
P4KE350	**STUP0E5**	315	385	1.0	284	5.0	0.79	504	0.110
P4KE350A	**STUP5E5**	332	368	1.0	300	5.0	0.83	482	0.110
P4KE400	**STUP0G0**	360	440	1.0	324	5.0	0.70	574	0.110
P4KE400A	**STUP5G0**	380	420	1.0	342	5.0	0.73	548	0.110
P4KE440	**STUP0G4**	396	484	1.0	356	5.0	0.95	631	0.110
P4KE440A	**STUP5G4**	418	462	1.0	376	5.0	1.00	602	0.110

Notes:

(1) V_{BR} measured after It applied for 300 μs, It = square wave pulse or equivalent

(2) V_F = 3.5 Vmax., I_F = 25 A (6.8 V to 91 V)

V_F = 5.0 Vmax., I_F = 25 A (100 V to 400 V) per 1/2 square or equivalent sine wave

PW = 8.3 ms, duty cycle = 4 pulses per minute maximum

(3) For bidirectional use "C" or "CA" suffix (Axial Lead) / replace the third letter of type from "U" to "B" (SMD)

(4) "4KE" for Axial lead / "STU" or "STB" for SMD will be omitted on marking of the diode

(5) For bidirectional types having V_R of 10 V and under, the IR limit is doubled

Transient Voltage Suppressor Diodes

The plastic material carries U/L recognition 94V-0.

Type No.	Breakdown Voltage @ It (Note 1)			Working Peak Reverse Voltage	Maximum Reverse Leakage @ V_{RWM}	Maximum Reverse Current	Maximum Clamping Voltage @ I_{RSM}	Maximum Temperature Coefficient of V_{BR}
	V_{BR} (V)		It	V_{RWM}	I_R	I_{RSM}	V_{RSM}	of V_{BR}
Unidirectional	Min.	Max.	(mA)	(V)	(μA)	(A)	(V)	(% / °C)

TGL41 Series, 400W, Case Type: MELF(Plastic)



TGL41-6.8	6.12	7.48	10	5.50	1000	37.0	10.8	0.060
TGL41-6.8A	6.45	7.14	10	5.80	1000	38.1	10.5	0.060
TGL41-7.5	6.75	8.25	10	6.05	500	34.2	11.7	0.064
TGL41-7.5A	7.13	7.88	10	6.40	500	35.4	11.3	0.064
TGL41-8.2	7.38	9.02	10	6.63	200	32.0	12.5	0.068
TGL41-8.2A	7.79	8.61	10	7.02	200	33.1	12.1	0.068
TGL41-9.1	8.19	10.0	1.0	7.37	50	29.0	13.8	0.071
TGL41-9.1A	8.65	9.55	1.0	7.78	50	29.9	13.4	0.071
TGL41-10	9.0	11.0	1.0	8.10	10	26.7	15.0	0.076
TGL41-10A	9.5	10.5	1.0	8.55	10	27.6	14.0	0.076
TGL41-11	9.9	12.1	1.0	8.92	5	24.7	16.2	0.078
TGL41-11A	10.5	11.6	1.0	9.40	5	25.6	15.6	0.078
TGL41-12	10.8	13.2	1.0	9.72	5	23.1	17.3	0.081
TGL41-12A	11.4	12.6	1.0	10.2	5	24.0	16.7	0.081
TGL41-13	11.7	14.3	1.0	10.5	5	21.1	19.0	0.084
TGL41-13A	12.4	13.7	1.0	11.1	5	22.0	18.2	0.084
TGL41-15	13.5	16.5	1.0	12.1	5	18.2	22.0	0.087
TGL41-15A	14.3	15.8	1.0	12.8	5	18.9	21.2	0.087
TGL41-16	14.4	17.6	1.0	12.9	5	17.0	23.5	0.089
TGL41-16A	15.2	16.8	1.0	13.6	5	17.8	22.5	0.089
TGL41-18	16.2	19.8	1.0	14.5	5	15.1	26.5	0.091
TGL41-18A	17.1	18.9	1.0	15.3	5	15.9	25.2	0.091
TGL41-20	18.0	22.0	1.0	16.2	5	13.7	29.1	0.093
TGL41-20A	19.0	21.0	1.0	17.1	5	14.4	27.7	0.093
TGL41-22	19.8	24.2	1.0	17.8	5	12.5	31.9	0.095
TGL41-22A	20.9	23.1	1.0	18.8	5	13.1	30.6	0.095
TGL41-24	21.6	26.4	1.0	19.4	5	11.5	34.7	0.097
TGL41-24A	22.8	25.2	1.0	20.5	5	12.0	33.2	0.097
TGL41-27	24.3	29.7	1.0	21.8	5	10.2	39.1	0.099
TGL41-27A	25.7	28.4	1.0	23.1	5	10.7	37.5	0.099
TGL41-30	27.0	30.0	1.0	24.3	5	9.2	43.5	0.100
TGL41-30A	28.5	31.5	1.0	25.6	5	9.7	41.4	0.100
TGL41-33	29.7	36.3	1.0	26.8	5	8.4	47.7	0.101
TGL41-33A	31.4	34.7	1.0	28.2	5	8.8	45.7	0.101
TGL41-36	32.4	39.6	1.0	29.1	5	7.7	52.0	0.102
TGL41-36A	34.2	37.8	1.0	30.8	5	8.0	49.9	0.102
TGL41-39	35.1	42.9	1.0	31.6	5	7.1	56.4	0.103
TGL41-39A	37.1	41.0	1.0	33.3	5	7.4	53.9	0.103
TGL41-43	38.7	47.3	1.0	34.8	5	6.5	61.9	0.104
TGL41-43A	40.9	45.2	1.0	36.8	5	6.7	59.3	0.104

Transient Voltage Suppressor Diodes

The plastic material carries U/L recognition 94V-0.

Type No.	Breakdown Voltage @ It (Note 1)			Working Peak Reverse Voltage	Maximum Reverse Leakage @ V_{RWM}	Maximum Reverse Current	Maximum Clamping Voltage @ I_{RSM}	Maximum Temperature Coefficient of V_{BR}
	V_{BR} (V)		It	V_{RWM}	I_R	I_{RSM}	V_{RSM}	of V_{BR}
Unidirectional	Min.	Max.	(mA)	(V)	(μA)	(A)	(V)	(% / °C)

TGL41 Series, 400W, Case Type: MELF(Plastic)



TGL41-47	42.3	51.7	1.0	38.1	5	5.9	67.8	0.104
TGL41-47A	44.7	49.4	1.0	40.2	5	6.2	64.8	0.104
TGL41-51	45.9	56.1	1.0	41.3	5	5.4	73.5	0.105
TGL41-51A	48.5	53.6	1.0	43.6	5	5.7	70.1	0.105
TGL41-56	50.4	61.6	1.0	45.4	5	5.0	80.5	0.106
TGL41-564A	53.2	58.8	1.0	47.8	5	5.2	77.0	0.106
TGL41-62	55.8	68.8	1.0	50.2	5	4.5	89.0	0.107
TGL41-62A	58.9	65.1	1.0	53.0	5	4.7	85.0	0.107
TGL41-68	61.2	74.8	1.0	55.1	5	4.1	98.0	0.107
TGL41-68A	64.6	71.4	1.0	58.1	5	4.3	92.0	0.107
TGL41-75	67.5	82.5	1.0	60.7	5	3.7	108	0.108
TGL41-75A	71.3	78.8	1.0	64.1	5	3.9	103	0.108
TGL41-82	73.8	90.2	1.0	66.4	5	3.4	118	0.108
TGL41-82A	77.9	86.1	1.0	70.1	5	3.5	113	0.108
TGL41-91	81.9	100	1.0	73.7	5	3.1	131	0.109
TGL41-91A	86.5	95.5	1.0	77.8	5	3.2	125	0.109
TGL41-100	90	110	1.0	81.0	5	1.39	144	0.109
TGL41-100A	95	105	1.0	85.5	5	1.46	137	0.109
TGL41-110	99	121	1.0	89.2	5	1.27	158	0.110
TGL41-110A	105	116	1.0	94.0	5	1.32	152	0.110
TGL41-120	108	132	1.0	97.2	5	1.16	173	0.110
TGL41-120A	114	126	1.0	102	5	1.21	165	0.110
TGL41-130	117	143	1.0	105	5	1.07	187	0.110
TGL41-130A	124	137	1.0	111	5	1.12	179	0.110
TGL41-150	135	165	1.0	121	5	0.93	215	0.111
TGL41-150A	143	158	1.0	128	5	0.97	207	0.111
TGL41-160	144	176	1.0	130	5	0.87	230	0.111
TGL41-160A	152	168	1.0	136	5	0.91	219	0.111
TGL41-170	153	187	1.0	138	5	0.82	244	0.111
TGL41-170A	162	179	1.0	145	5	0.85	234	0.111
TGL41-180	162	198	1.0	146	5	0.78	258	0.111
TGL41-180A	171	189	1.0	154	5	0.81	246	0.111
TGL41-200	180	220	1.0	162	5	0.70	287	0.111
TGL41-200A	190	210	1.0	171	5	0.73	274	0.111

Note :

(1) Pulse test: tp ≤ 50 ms

(2) For bidirectional use "C" or "CA" suffix

Transient Voltage Suppressor Diodes

The plastic material carries U/L recognition 94V-0.

Type No.	Breakdown Voltage @ It [1]			Working Peak Reverse Voltage	Max. Reverse Leakage @ V_{RWM}	Maximum Peak Pulse Surge Current	Maximum Clamping Voltage @ I_{PPM}
	V_{BR} (V)		It	V_{RWM}	I_R [3]	I_{PPM}	V_C
Unidirectional	Min.	Max.	(mA)	(V)	(μA)	(A)	(V)
SMAJ Series, 400W, Case Type: SMA							
SMAJ5.0	6.40	7.82	10	5.0	800	41.7	9.6
SMAJ5.0A [4]	6.40	7.07	10	5.0	800	43.5	9.2
SMAJ6.0	6.67	8.15	10	6.0	800	35.1	11.4
SMAJ6.0A	6.67	7.37	10	6.0	800	38.8	10.3
SMAJ6.5	7.22	8.82	10	6.5	500	32.5	12.3
SMAJ6.5A	7.22	7.98	10	6.5	500	35.7	11.2
SMAJ7.0	7.78	9.51	10	7.0	200	30.1	13.3
SMAJ7.0A	7.78	8.6	10	7.0	200	33.3	12.0
SMAJ7.5	8.33	10.2	1.0	7.5	100	28.0	14.3
SMAJ7.5A	8.33	9.21	1.0	7.5	100	31.0	12.9
SMAJ8.0	8.89	10.9	1.0	8.0	50	26.7	15.0
SMAJ8.0A	8.89	9.83	1.0	8.0	50	29.4	13.6
SMAJ8.5	9.44	11.5	1.0	8.5	10	25.2	15.9
SMAJ8.5A	9.44	10.4	1.0	8.5	10	27.8	14.4
SMAJ9.0	10.0	12.2	1.0	9.0	5.0	23.7	16.9
SMAJ9.0A	10.0	11.1	1.0	9.0	5.0	26.0	15.4
SMAJ10	11.1	13.6	1.0	10	1.0	21.2	18.8
SMAJ10A	11.1	12.3	1.0	10	1.0	23.5	17.0
SMAJ11	12.2	14.9	1.0	11	1.0	19.9	20.1
SMAJ11A	12.2	13.5	1.0	11	1.0	22.0	18.2
SMAJ12	13.3	16.3	1.0	12	1.0	18.2	22.0
SMAJ12A	13.3	14.7	1.0	12	1.0	20.1	19.9
SMAJ13	14.4	17.6	1.0	13	1.0	16.8	23.8
SMAJ13A	14.4	15.9	1.0	13	1.0	18.6	21.5
SMAJ14	15.6	19.1	1.0	14	1.0	15.5	25.8
SMAJ14A	15.6	17.2	1.0	14	1.0	17.2	23.2
SMAJ15	16.7	20.4	1.0	15	1.0	14.8	26.9
SMAJ15A	16.7	18.5	1.0	15	1.0	16.4	24.4
SMAJ16	17.8	21.8	1.0	16	1.0	13.9	28.8
SMAJ16A	17.8	19.7	1.0	16	1.0	15.4	26.0
SMAJ17	18.9	23.1	1.0	17	1.0	13.1	30.5
SMAJ17A	18.9	20.9	1.0	17	1.0	14.5	27.6
SMAJ18	20.0	24.4	1.0	18	1.0	12.4	32.2
SMAJ18A	20.0	22.1	1.0	18	1.0	13.7	29.2
SMAJ20	22.2	27.1	1.0	20	1.0	11.2	35.8
SMAJ20A	22.2	24.5	1.0	20	1.0	12.3	32.4
SMAJ22	24.4	29.8	1.0	22	1.0	10.2	39.4
SMAJ22A	24.4	26.9	1.0	22	1.0	11.3	35.5
SMAJ24	26.7	32.6	1.0	24	1.0	9.3	43.0
SMAJ24A	26.7	29.5	1.0	24	1.0	10.3	38.9
SMAJ26	28.9	35.3	1.0	26	1.0	8.6	46.6
SMAJ26A	28.9	31.9	1.0	26	1.0	9.5	42.1
SMAJ28	31.1	38.0	1.0	28	1.0	8.0	50.0
SMAJ28A	31.1	34.4	1.0	28	1.0	8.8	45.4
SMAJ30	33.3	40.7	1.0	30	1.0	7.5	53.5
SMAJ30A	33.3	36.8	1.0	30	1.0	8.3	48.4
SMAJ33	36.7	44.9	1.0	33	1.0	6.8	59.0
SMAJ33A	36.7	40.6	1.0	33	1.0	7.5	53.3
SMAJ36	40.0	48.9	1.0	36	1.0	6.2	64.3
SMAJ36A	40.0	44.2	1.0	36	1.0	6.9	58.1

Transient Voltage Suppressor Diodes

The plastic material carries U/L recognition 94V-0.

Type No.	Breakdown Voltage @ It (1)			Working Peak Reverse Voltage	Max. Reverse Leakage @ V_{RWM}	Maximum Peak Pulse Surge Current	Maximum Clamping Voltage @ I_{PPM}
	V_{BR} (V)		It	V_{RWM}	I_R (3)	I_{PPM}	V_C
Unidirectional	Min.	Max.	(mA)	(V)	(μA)	(A)	(V)
SMAJ Series, 400W, Case Type: SMA							
SMAJ40	44.4	54.3	1.0	40	1.0	5.6	71.4
SMAJ40A	44.4	49.1	1.0	40	1.0	6.2	64.5
SMAJ43	47.8	58.4	1.0	43	1.0	5.2	76.7
SMAJ43A	47.8	52.8	1.0	43	1.0	5.7	69.4
SMAJ45	50.0	61.1	1.0	45	1.0	5.0	80.3
SMAJ45A	50.0	55.3	1.0	45	1.0	5.5	72.7
SMAJ48	53.3	65.1	1.0	48	1.0	4.7	85.5
SMAJ48A	53.3	58.9	1.0	48	1.0	5.2	77.4
SMAJ51	56.7	69.3	1.0	51	1.0	4.4	91.1
SMAJ51A	56.7	62.7	1.0	51	1.0	4.9	82.4
SMAJ54	60.0	73.3	1.0	54	1.0	4.2	96.3
SMAJ54A	60.0	66.3	1.0	54	1.0	4.6	87.1
SMAJ58	64.4	78.7	1.0	58	1.0	3.9	103
SMAJ58A	64.4	71.2	1.0	58	1.0	4.3	93.6
SMAJ60	66.7	81.5	1.0	60	1.0	3.7	107
SMAJ60A	66.7	73.7	1.0	60	1.0	4.1	96.8
SMAJ64	71.1	86.4	1.0	64	1.0	3.5	114
SMAJ64A	71.1	78.6	1.0	64	1.0	3.9	103
SMAJ70	77.8	95.1	1.0	70	1.0	3.2	125
SMAJ70A	77.8	86	1.0	70	1.0	3.5	113
SMAJ75	83.3	102	1.0	75	1.0	3.0	134
SMAJ75A	83.3	92.1	1.0	75	1.0	3.3	121
SMAJ78	86.7	106	1.0	78	1.0	2.9	139
SMAJ78A	86.7	95.8	1.0	78	1.0	3.2	126
SMAJ85	94.4	115	1.0	85	1.0	2.0	151
SMAJ85A	94.4	104	1.0	85	1.0	2.2	137
SMAJ90	100	122	1.0	90	1.0	1.9	160
SMAJ90A	100	111	1.0	90	1.0	2.1	146
SMAJ100	111	136	1.0	100	1.0	1.7	179
SMAJ100A	111	123	1.0	100	1.0	1.9	162
SMAJ110	122	149	1.0	110	1.0	1.5	196
SMAJ110A	122	135	1.0	110	1.0	1.7	177
SMAJ120	133	163	1.0	120	1.0	1.4	214
SMAJ120A	133	147	1.0	120	1.0	1.6	193
SMAJ130	144	176	1.0	130	1.0	1.3	231
SMAJ130A	144	159	1.0	130	1.0	1.4	209
SMAJ150	167	204	1.0	150	1.0	1.1	268
SMAJ150A	167	185	1.0	150	1.0	1.2	243
SMAJ160	178	218	1.0	160	1.0	1.0	287
SMAJ160A	178	197	1.0	160	1.0	1.2	259
SMAJ170	189	231	1.0	170	1.0	0.99	304
SMAJ170A	189	209	1.0	170	1.0	1.09	275
SMAJ188	209	255	1.0	188	1.0	0.90	344
SMAJ188A	209	231	1.0	188	1.0	0.91	328

Notes :

(1) Pulse test : tp ≤ 50ms

(2) For bidirectional use "C" or "CA" suffix

(3) For bi-directional types having V_R of 10 V and less , the I_R limit is doubled

(4) For the bidirectional SMAJ5.0CA, the maximum V_{BR} is 7.25V

(5) "SMAJ" will be omitted on marking of the diode

Transient Voltage Suppressor Diodes

The plastic material carries U/L recognition 94V-0.

Type No.		Breakdown Voltage @ It (Note 1)			Working Peak Reverse Voltage	Maximum Reverse Leakage @ V_{RWM}	Maximum Reverse Current	Maximum Clamping Voltage @ I_{RSM}	Maximum Voltage Temperature
Unidirectional		V_{BR} (V)		It	V_{RWM}	I_R	I_{RSM}	V_{RSM}	Variation of V_{BR}
Axial Lead	SMD	Min.	Max.	(mA)	(V)	(μA)	(A)	(V)	(mV / °C)
SA / STUS Series, 500W, Case Type: DO-41/SMA									
SA5.0	**STUS06H**	6.40	7.3	10	5.0	600	52.0	9.6	5.0
SA5.0A	**STUS56H**	6.40	7.0	10	5.0	600	54.3	9.2	5.0
SA6.0	**STUS07A**	6.67	8.15	10	6.0	600	43.9	11.4	5.0
SA6.0A	**STUS57A**	6.67	7.37	10	6.0	600	48.5	10.3	5.0
SA6.5	**STUS07G**	7.22	8.82	10	6.5	400	40.7	12.3	5.0
SA6.5A	**STUS57G**	7.22	7.98	10	6.5	400	44.7	11.2	5.0
SA7.0	**STUS08C**	7.78	9.51	10	7.0	150	37.8	13.3	6.0
SA7.0A	**STUS58C**	7.78	8.60	10	7.0	150	41.7	12.0	6.0
SA7.5	**STUS08I**	8.33	10.2	1.0	7.5	50	35.0	14.3	7.0
SA7.5A	**STUS58I**	8.33	9.21	1.0	7.5	50	38.8	12.9	7.0
SA8.0	**STUS09B**	8.89	10.9	1.0	8.0	25	33.3	15.0	7.0
SA8.0A	**STUS59B**	8.89	9.83	1.0	8.0	25	36.7	13.6	7.0
SA8.5	**STUS010**	9.44	11.5	1.0	8.5	5.0	31.4	15.9	8.0
SA8.5A	**STUS510**	9.44	10.4	1.0	8.5	5.0	34.7	14.4	8.0
SA9.0	**STUS011**	10.0	12.2	1.0	9.0	1.0	29.5	16.9	9.0
SA9.0A	**STUS511**	10.0	11.1	1.0	9.0	1.0	32.5	15.4	9.0
SA10	**STUS012**	11.1	13.6	1.0	10.0	1.0	26.6	18.8	10.0
SA10A	**STUS512**	11.1	12.3	1.0	10.0	1.0	29.4	17.0	10.0
SA11	**STUS013**	12.2	14.9	1.0	11.0	1.0	24.9	20.1	11.0
SA11A	**STUS513**	12.2	13.5	1.0	11.0	1.0	27.4	18.2	11.0
SA12	**STUS014**	13.3	16.3	1.0	12.0	1.0	22.7	22.0	12.0
SA12A	**STUS514**	13.3	14.7	1.0	12.0	1.0	25.1	19.9	12.0
SA13	**STUS015**	14.4	17.6	1.0	13.0	1.0	21	23.8	13.0
SA13A	**STUS515**	14.4	15.9	1.0	13.0	1.0	23.2	21.5	13.0
SA14	**STUS016**	15.6	19.1	1.0	14.0	1.0	19.4	25.8	14.0
SA14A	**STUS516**	15.6	17.2	1.0	14.0	1.0	21.5	23.2	14.0
SA15	**STUS018**	16.7	20.4	1.0	15.0	1.0	18.8	26.9	16.0
SA15A	**STUS518**	16.7	18.5	1.0	15.0	1.0	20.6	24.4	16.0
SA16	**STUS019**	17.8	21.8	1.0	16.0	1.0	17.6	28.8	19.0
SA16A	**STUS519**	17.8	19.7	1.0	16.0	1.0	19.2	26.0	17.0
SA17	**STUS020**	18.9	23.1	1.0	17.0	1.0	16.4	30.5	20.0
SA17A	**STUS520**	18.9	20.9	1.0	17.0	1.0	18.1	27.6	19.0
SA18	**STUS021**	20.0	24.4	1.0	18.0	1.0	15.5	32.2	21.0
SA18A	**STUS521**	20.0	22.1	1.0	18.0	1.0	17.2	29.2	20.0
SA20	**STUS023**	22.2	27.1	1.0	20.0	1.0	13.9	35.8	25.0
SA20A	**STUS523**	22.2	24.5	1.0	20.0	1.0	15.4	32.4	23.0
SA22	**STUS026**	24.4	29.8	1.0	22.0	1.0	12.7	39.4	28.0
SA22A	**STUS526**	24.4	26.9	1.0	22.0	1.0	14.1	35.5	25.0
SA24	**STUS028**	26.7	32.6	1.0	24.0	1.0	11.6	43.0	31.0
SA24A	**STUS528**	26.7	29.5	1.0	24.0	1.0	12.8	38.9	28.0
SA26	**STUS030**	28.9	35.3	1.0	26.0	1.0	10.7	46.6	31.0
SA26A	**STUS530**	28.9	31.9	1.0	26.0	1.0	11.9	42.1	30.0
SA28	**STUS033**	31.1	38.0	1.0	28.0	1.0	9.9	50.0	35.0
SA28A	**STUS533**	31.1	34.4	1.0	28.0	1.0	11	45.4	31.0
SA30	**STUS035**	33.3	40.7	1.0	30.0	1.0	9.3	53.5	39.0
SA30A	**STUS535**	33.3	36.8	1.0	30.0	1.0	10.3	48.4	36.0
SA33	**STUS039**	36.7	44.9	1.0	33.0	1.0	8.5	59.0	42.0
SA33A	**STUS539**	36.7	40.6	1.0	33.0	1.0	9.4	53.3	39.0
SA36	**STUS042**	40.0	48.9	1.0	36.0	1.0	7.8	64.3	46.0
SA36A	**STUS542**	40.0	44.2	1.0	36.0	1.0	8.6	58.1	41.0

Transient Voltage Suppressor Diodes

The plastic material carries U/L recognition 94V-0.

Type No.		Breakdown Voltage @ It (Note 1)			Working Peak Reverse Voltage	Maximum Reverse Leakage @ V_{RWM}	Maximum Reverse Current	Maximum Clamping Voltage @ I_{RSM}	Maximum Voltage Temperature
Unidirectional		V_{BR} (V)		It	V_{RWM}	I_R	I_{RSM}	V_{RSM}	Variation of V_{BR}
Axial Lead	SMD	Min.	Max.	(mA)	(V)	(μA)	(A)	(V)	(mV / °C)
SA / STUS Series, 500W, Case Type: DO-41/SMA									
SA40	**STUS047**	44.4	54.3	1.0	40.0	1.0	7.0	71.4	51.0
SA40A	**STUS547**	44.4	49.1	1.0	40.0	1.0	7.8	64.5	46.0
SA43	**STUS050**	47.8	58.4	1.0	43.0	1.0	6.5	76.7	55.0
SA43A	**STUS550**	47.8	52.8	1.0	43.0	1.0	7.2	69.4	50.0
SA45	**STUS053**	50.0	61.1	1.0	45.0	1.0	6.2	80.3	58.0
SA45A	**STUS553**	50.0	55.3	1.0	45.0	1.0	6.9	72.7	52.0
SA48	**STUS056**	53.3	65.1	1.0	48.0	1.0	5.8	85.5	63.0
SA48A	**STUS556**	53.3	58.9	1.0	48.0	1.0	6.5	77.4	56.0
SA51	**STUS060**	56.7	69.3	1.0	51.0	1.0	5.5	91.1	66.0
SA51A	**STUS560**	56.7	62.7	1.0	51.0	1.0	6.1	82.4	61.0
SA54	**STUS063**	60.0	73.3	1.0	54.0	1.0	5.2	96.3	71.0
SA54A	**STUS563**	60.0	66.3	1.0	54.0	1.0	5.7	87.1	65.0
SA58	**STUS068**	64.4	78.7	1.0	58.0	1.0	4.9	103	78.0
SA58A	**STUS568**	64.4	71.2	1.0	58.0	1.0	5.3	93.6	70.0
SA60	**STUS071**	66.7	81.5	1.0	60.0	1.0	4.7	107	80.0
SA60A	**STUS571**	66.7	73.7	1.0	60.0	1.0	5.2	96.8	71.0
SA64	**STUS075**	71.1	86.9	1.0	64.0	1.0	4.4	114	86.0
SA64A	**STUS575**	71.1	78.6	1.0	64.0	1.0	4.9	103	76.0
SA70	**STUS082**	77.8	95.1	1.0	70.0	1.0	4.0	125	94.0
SA70A	**STUS582**	77.8	86.0	1.0	70.0	1.0	4.4	113	85.0
SA75	**STUS088**	83.3	102	1.0	75.0	1.0	3.7	134	101
SA75A	**STUS588**	83.3	92.1	1.0	75.0	1.0	4.1	121	91.0
SA78	**STUS091**	86.7	106	1.0	78.0	1.0	3.6	139	105
SA78A	**STUS591**	86.7	95.8	1.0	78.0	1.0	4.0	126	95.0
SA85	**STUS099**	94.4	115	1.0	85.0	1.0	3.3	151	114
SA85A	**STUS599**	94.4	104	1.0	85.0	1.0	3.6	137	103
SA90	**STUS0B1**	100	122	1.0	90.0	1.0	3.1	160	121
SA90A	**STUS5B1**	100	111	1.0	90.0	1.0	3.4	146	110
SA100	**STUS0B2**	111	136	1.0	100	1.0	2.8	179	135
SA100A	**STUS5B2**	111	123	1.0	100	1.0	3.1	162	123
SA110	**STUS0B3**	122	149	1.0	110	1.0	2.6	196	148
SA110A	**STUS5B3**	122	135	1.0	110	1.0	2.8	177	133
SA120	**STUS0B4**	133	163	1.0	120	1.0	2.3	214	162
SA120A	**STUS5B4**	133	147	1.0	120	1.0	2.0	193	146
SA130	**STUS0B5**	144	176	1.0	130	1.0	2.2	231	175
SA130A	**STUS5B5**	144	159	1.0	130	1.0	2.4	209	158
SA150	**STUS0B8**	167	204	1.0	150	1.0	1.9	268	203
SA150A	**STUS5B8**	167	185	1.0	150	1.0	2.1	243	184
SA160	**STUS0B9**	178	218	1.0	160	1.0	1.7	287	217
SA160A	**STUS5B9**	178	197	1.0	160	1.0	1.9	259	196
SA170	**STUS0D0**	189	231	1.0	170	1.0	1.6	304	230
SA170A	**STUS5D0**	189	209	1.0	170	1.0	1.8	275	208

Notes:

(1) V_{BR} measured after It applied for 300 μs., It = square wave pulse or equivalent

(2) V_F = 3.5 Vmax., I_F = 35 A (6.8 V to 91 V)
V_F = 5.0 Vmax., I_F = 35 A (150 V to 200 V) per 1/2 square or equivalent sine wave
PW = 8.3 ms, duty cycle = 4 pulses per minute maximum

(3) For bidirectional use suffix "C" or "CA" (Axial Lead) / replace the third digit of type from "U" to "B" (SMD)

(4) "STU" or "STB" will be omitted on marking of the diode.

(5) For bidirectional types having V_R of 10 V and under, the I_R limit is doubled

Transient Voltage Suppressor Diodes

The plastic material carries U/L recognition 94V-0.

Type No.	Breakdown Voltage @ It (Note 1)			Working Peak Reverse Voltage	Maximum Reverse Leakage @ V_{RWM}	Maximum Peak pulse Current	Maximum Clamping Voltage @ I_{RSM}
	V_{BR} (V)		It	V_{RWM}	I_R	I_{PP}	V_{RSM}
Unidirectional	Min.	Max.	(mA)	(V)	(μA)	(A)	(V)

BZW06 Series, 600W, Case Type: DO-15



BZW06P5V8	6.45	7.48	10	5.80	1000	57	10.5
BZW06-5V8	6.45	7.14	10	5.80	1000	57	10.5
BZW06P6V4	7.13	7.25	10	6.40	500	53	11.3
BZW06-6V4	7.13	7.88	10	6.40	500	53	11.3
BZW06P7V0	7.79	9.02	10	7.02	200	50	12.1
BZW06-7V0	7.79	8.61	10	7.02	200	50	12.1
BZW06P7V8	8.65	10.0	1.0	7.78	50	45	13.4
BZW06-7V8	8.65	9.55	1.0	7.78	50	45	13.4
BZW06P8V5	9.50	11.0	1.0	8.55	10	41	14.5
BZW06-8V5	9.50	10.5	1.0	8.55	10	41	14.5
BZW06P9V4	10.5	12.1	1.0	9.40	5.0	38	15.6
BZW06-9V4	10.5	11.6	1.0	9.40	5.0	38	15.6
BZW06P10	11.4	13.2	1.0	10.2	5.0	36	16.7
BZW06-10	11.4	12.6	1.0	10.2	5.0	36	16.7
BZW06P11	12.4	14.3	1.0	11.1	5.0	33	18.2
BZW06-11	12.4	13.7	1.0	11.1	5.0	33	18.2
BZW06P13	14.3	16.5	1.0	12.8	5.0	28	21.2
BZW06-13	14.3	15.8	1.0	12.8	5.0	28	21.2
BZW06P14	15.2	17.6	1.0	13.6	5.0	27	22.5
BZW06-14	15.2	16.8	1.0	13.6	5.0	27	22.5
BZW06P15	17.1	19.8	1.0	15.3	1.0	24	25.2
BZW06-15	17.1	18.9	1.0	15.3	1.0	24	25.2
BZW06P17	19.0	22.0	1.0	17.1	1.0	22	27.2
BZW06-17	19.0	21.0	1.0	17.1	1.0	22	27.2
BZW06P19	20.9	24.2	1.0	18.8	1.0	20	30.6
BZW06-19	20.9	23.1	1.0	18.8	1.0	20	30.6
BZW06P20	22.8	26.4	1.0	20.5	1.0	18	33.2
BZW06-20	22.8	25.2	1.0	20.5	1.0	18	33.2
BZW06P23	25.7	29.7	1.0	23.1	1.0	16	37.5
BZW06-23	25.7	28.4	1.0	23.1	1.0	16	37.5
BZW06P26	28.5	33.0	1.0	25.6	1.0	14.5	41.5
BZW06-26	28.5	31.5	1.0	25.6	1.0	14.5	41.5
BZW06P28	31.4	36.3	1.0	28.2	1.0	13.1	45.7
BZW06-28	31.4	34.7	1.0	28.2	1.0	13.1	45.7
BZW06P31	34.2	39.6	1.0	30.8	1.0	12.0	49.9
BZW06-31	34.2	37.8	1.0	30.8	1.0	12.0	49.9
BZW06P33	37.1	42.9	1.0	33.3	1.0	11.1	53.9
BZW06-33	37.1	41.0	1.0	33.3	1.0	11.1	53.9
BZW06P37	40.9	47.3	1.0	36.8	1.0	10.1	59.3
BZW06-37	40.9	45.2	1.0	36.8	1.0	10.1	59.3
BZW06P40	44.7	51.7	1.0	40.2	1.0	9.3	64.8
BZW06-40	44.7	49.4	1.0	40.2	1.0	9.3	64.8
BZW06P44	48.5	56.1	1.0	43.6	1.0	8.6	70.1
BZW06-44	48.5	53.6	1.0	43.6	1.0	8.6	70.1
BZW06P48	53.2	61.6	1.0	47.8	1.0	7.8	77
BZW06-48	53.2	58.8	1.0	47.8	1.0	7.8	77
BZW06P53	58.9	68.2	1.0	53	1.0	7.1	85
BZW06-53	58.9	65.1	1.0	53	1.0	7.1	85

Transient Voltage Suppressor Diodes

The plastic material carries U/L recognition 94V-0.

Type No.	Breakdown Voltage @ It (Note 1)			Working Peak Reverse Voltage	Maximum Reverse Leakage @ V_{RWM}	Maximum Peak pulse Current	Maximum Clamping Voltage @ I_{RSM}
	V_{BR} (V)		It	V_{RWM}	I_R	I_{PP}	V_{RSM}
Unidirectional	Min.	Max.	(mA)	(V)	(μA)	(A)	(V)

BZW06 Series, 600W, Case Type: DO-15



BZW06P58	64.6	74.8	1.0	58.1	1.0	6.5	92
BZW06-58	64.6	71.4	1.0	58.1	1.0	6.5	92
BZW06P64	71.3	82.5	1.0	64.1	1.0	5.8	103
BZW06-64	71.3	78.8	1.0	64.1	1.0	5.8	103
BZW06P70	77.9	90.2	1.0	70.1	1.0	5.3	113
BZW06-70	77.9	86.1	1.0	70.1	1.0	5.3	113
BZW06P78	86.5	100	1.0	77.8	1.0	4.8	125
BZW06-78	86.5	95.5	1.0	77.8	1.0	4.8	125
BZW06P85	95	110	1.0	85.8	1.0	4.4	137
BZW06-85	95	105	1.0	85.8	1.0	4.4	137
BZW06P94	105	121	1.0	94	1.0	3.9	152
BZW06-94	105	116	1.0	94	1.0	3.9	152
BZW06P102	114	132	1.0	102	1.0	3.6	165
BZW06-102	114	126	1.0	102	1.0	3.6	165
BZW06P111	124	143	1.0	111	1.0	3.4	179
BZW06-111	124	137	1.0	111	1.0	3.4	179
BZW06P128	143	165	1.0	128	1.0	2.9	207
BZW06-128	143	158	1.0	128	1.0	2.9	207
BZW06P136	152	176	1.0	136	1.0	2.7	219
BZW06-136	152	168	1.0	136	1.0	2.7	219
BZW06P145	161	187	1.0	145	1.0	2.6	234
BZW06-145	161	179	1.0	145	1.0	2.6	234
BZW06P154	171	198	1.0	154	1.0	2.4	246
BZW06-154	171	189	1.0	154	1.0	2.4	246
BZW06P171	190	220	1.0	171	1.0	2.2	274
BZW06-171	190	210	1.0	171	1.0	2.2	274
BZW06P188	209	242	1.0	188	1.0	2.0	301
BZW06-188	209	231	1.0	188	1.0	2.0	301
BZW06P213	237	275	1.0	213	1.0	1.8	344
BZW06-213	237	263	1.0	213	1.0	1.8	344
BZW06P239	266	308	1.0	239	1.0	1.7	384
BZW06-239	266	294	1.0	239	1.0	1.7	384
BZW06P256	285	330	1.0	256	1.0	1.6	414
BZW06-256	285	315	1.0	256	1.0	1.6	414
BZW06P273	304	352	1.0	273	1.0	1.6	436
BZW06-273	304	336	1.0	273	1.0	1.6	436
BZW06P299	332	285	1.0	299	1.0	1.6	482
BZW06-299	332	368	1.0	299	1.0	1.6	482
BZW06P342	380	440	1.0	342	1.0	1.3	548
BZW06-342	380	420	1.0	342	1.0	1.3	548
BZW06P376	418	484	1.0	376	1.0	1.3	603
BZW06-376	418	462	1.0	376	1.0	1.3	603

Notes:

(1) Pulse test : tp < 50 ms

(2) For Bidirectional use suffix "B" (Axial Lead)

(3) For bidirectional types having V_R of 10 V and under, the I_R limit is doubled

(4) "ZW06" will be omitted on marking of the diode.

(5) For case type D2 (Axial Lead) , we can support until the end of 2008.

Transient Voltage Suppressor Diodes

The plastic material carries U/L recognition 94V-0.

Type No.		Breakdown Voltage @ It (Note 1)			Working Peak Reverse Voltage	Maximum Reverse Leakage @ V_{RWM}	Maximum Reverse Current	Maximum Clamping Voltage @ I_{RSM}	Maximum Temperature Coefficient of V_{BR}
Unidirectional		V_{BR} (V)		It	V_{RWM}	I_R	I_{RSM}	V_{RSM}	
Axial Lead	SMD	Min.	Max.	(mA)	(V)	(μA)	(A)	(V)	(% / °C)

P6KE/STU6 Series, 600W, Case Type: DO-15/SMB



P6KE6.8	**STU606I**	6.12	7.48	10	5.50	1000	55.5	10.8	0.057
P6KE6.8A	**STU656I**	6.45	7.14	10	5.80	1000	57.0	10.5	0.057
P6KE7.5	**STU607F**	6.75	8.25	10	6.05	500	51.0	11.7	0.061
P6KE7.5A	**STU657F**	7.13	7.88	10	6.40	500	53.0	11.3	0.061
P6KE8.2	**STU608C**	7.38	9.02	10	6.63	200	48.0	12.5	0.065
P6KE8.2A	**STU658C**	7.79	8.61	10	7.02	200	50.0	12.1	0.065
P6KE9.1	**STU609B**	8.19	10.0	1.0	7.37	50	44.0	13.8	0.068
P6KE9.1A	**STU659B**	8.65	9.55	1.0	7.78	50	45.0	13.4	0.068
P6KE10	**STU6010**	9.00	11.0	1.0	8.10	10	40.0	15.0	0.073
P6KE10A	**STU6510**	9.50	10.5	1.0	8.55	10	41.0	14.5	0.073
P6KE11	**STU6011**	9.90	12.1	1.0	8.92	5.0	37.0	16.2	0.075
P6KE11A	**STU6511**	10.5	11.6	1.0	9.40	5.0	38.0	15.6	0.075
P6KE12	**STU6012**	10.8	13.2	1.0	9.72	5.0	35.0	17.3	0.078
P6KE12A	**STU6512**	11.4	12.6	1.0	10.2	5.0	36.0	16.7	0.078
P6KE13	**STU6013**	11.7	14.3	1.0	10.5	5.0	32.0	19.0	0.081
P6KE13A	**STU6513**	12.4	13.7	1.0	11.1	5.0	33.0	18.2	0.081
P6KE15	**STU6015**	13.5	16.3	1.0	12.1	5.0	27.0	22.0	0.084
P6KE15A	**STU6515**	14.3	15.8	1.0	12.8	5.0	28.0	21.2	0.084
P6KE16	**STU6016**	14.4	17.6	1.0	12.9	5.0	26.0	23.5	0.086
P6KE16A	**STU6516**	15.2	16.8	1.0	13.6	5.0	27.0	22.5	0.086
P6KE18	**STU6018**	16.2	19.8	1.0	14.5	5.0	23.0	26.5	0.088
P6KE18A	**STU6518**	17.1	18.9	1.0	15.3	5.0	24.0	25.2	0.088
P6KE20	**STU6020**	18.0	22.0	1.0	16.2	5.0	21.0	29.1	0.090
P6KE20A	**STU6520**	19.0	21.0	1.0	17.1	5.0	22.0	27.7	0.090
P6KE22	**STU6022**	19.8	24.2	1.0	17.8	5.0	19.0	31.9	0.092
P6KE22A	**STU6522**	20.9	23.1	1.0	18.8	5.0	20.0	30.6	0.092
P6KE24	**STU6024**	21.6	26.4	1.0	19.4	5.0	17.0	34.7	0.094
P6KE24A	**STU6524**	22.8	25.2	1.0	20.5	5.0	18.0	33.2	0.094
P6KE27	**STU6027**	24.3	29.7	1.0	21.8	5.0	15.0	39.1	0.096
P6KE27A	**STU6527**	25.7	28.4	1.0	23.1	5.0	16.0	37.5	0.096
P6KE30	**STU6030**	27.0	33.0	1.0	24.3	5.0	14.0	43.5	0.097
P6KE30A	**STU6530**	28.5	31.5	1.0	25.6	5.0	14.4	41.4	0.097
P6KE33	**STU6033**	29.7	36.3	1.0	26.8	5.0	12.6	47.7	0.098
P6KE33A	**STU6533**	31.4	34.7	1.0	28.2	5.0	13.2	45.7	0.098
P6KE36	**STU6036**	32.4	39.6	1.0	29.1	5.0	11.6	52.0	0.099
P6KE36A	**STU6536**	34.2	37.8	1.0	30.8	5.0	12.0	49.9	0.099
P6KE39	**STU6039**	35.1	42.9	1.0	31.6	5.0	10.6	56.4	0.100
P6KE39A	**STU6539**	37.1	41.0	1.0	33.3	5.0	11.2	53.9	0.100
P6KE43	**STU6043**	38.7	47.3	1.0	34.8	5.0	9.6	61.9	0.101
P6KE43A	**STU6543**	40.9	45.2	1.0	36.8	5.0	10.1	59.3	0.101
P6KE47	**STU6047**	42.3	51.7	1.0	38.1	5.0	8.9	67.8	0.101
P6KE47A	**STU6547**	44.7	49.4	1.0	40.2	5.0	9.3	64.8	0.101
P6KE51	**STU6051**	45.9	56.1	1.0	41.3	5.0	8.2	73.5	0.102
P6KE51A	**STU6551**	48.5	53.6	1.0	43.6	5.0	8.6	70.1	0.102
P6KE56	**STU6056**	50.4	61.6	1.0	45.4	5.0	7.4	80.5	0.103
P6KE56A	**STU6556**	53.2	58.8	1.0	47.8	5.0	7.8	77.0	0.103
P6KE62	**STU6062**	55.8	68.2	1.0	50.2	5.0	6.8	89.0	0.104
P6KE62A	**STU6562**	58.9	65.1	1.0	53.0	5.0	7.1	85.0	0.104

Transient Voltage Suppressor Diodes

The plastic material carries U/L recognition 94V-0.

Type No.		Breakdown Voltage @ It (Note 1)			Working Peak Reverse Voltage	Maximum Reverse Leakage @ V_{RWM}	Maximum Reverse Current	Maximum Clamping Voltage @ I_{RSM}	Maximum Temperature Coefficient of V_{BR}
Unidirectional		V_{BR} (V)		It	V_{RWM}	I_R	I_{RSM}	V_{RSM}	
Axial Lead	SMD	Min.	Max.	(mA)	(V)	(μA)	(A)	(V)	(% / °C)
P6KE/STU6 Series, 600W, Case Type: DO-15/SMB									
P6KE68	**STU6068**	61.2	74.8	1.0	55.1	5.0	6.1	98.0	0.104
P6KE68A	**STU6568**	64.6	71.4	1.0	58.1	5.0	6.5	92.0	0.104
P6KE75	**STU6075**	67.5	82.5	1.0	60.7	5.0	5.5	108	0.105
P6KE75A	**STU6575**	71.3	78.8	1.0	64.1	5.0	5.8	103	0.105
P6KE82	**STU6082**	73.8	90.2	1.0	66.4	5.0	5.1	118	0.105
P6KE82A	**STU6582**	77.9	86.1	1.0	70.1	5.0	5.3	113	0.105
P6KE91	**STU6091**	81.9	100	1.0	73.7	5.0	4.5	131	0.106
P6KE91A	**STU6591**	86.5	95.5	1.0	77.8	5.0	4.8	125	0.106
P6KE100	**STU60B0**	90.0	110	1.0	81	5.0	4.2	144	0.106
P6KE100A	**STU65B0**	95.0	105	1.0	85.5	5.0	4.4	137	0.106
P6KE110	**STU60B1**	99.0	121	1.0	89.2	5.0	3.8	158	0.107
P6KE110A	**STU65B1**	105	116	1.0	94.0	5.0	4.0	152	0.107
P6KE120	**STU60B2**	108	132	1.0	97.2	5.0	3.5	173	0.107
P6KE120A	**STU65B2**	114	126	1.0	102	5.0	3.6	165	0.107
P6KE130	**STU60B3**	117	143	1.0	106	5.0	3.2	187	0.107
P6KE130A	**STU65B3**	124	137	1.0	111	5.0	3.3	179	0.107
P6KE150	**STU60B5**	135	165	1.0	121	5.0	2.8	215	0.108
P6KE150A	**STU65B5**	143	158	1.0	128	5.0	2.9	207	0.108
P6KE160	**STU60B6**	144	176	1.0	130	5.0	2.6	230	0.108
P6KE160A	**STU65B6**	152	168	1.0	136	5.0	2.7	219	0.108
P6KE170	**STU60B7**	153	187	1.0	138	5.0	2.5	244	0.108
P6KE170A	**STU65B7**	162	179	1.0	145	5.0	2.6	234	0.108
P6KE180	**STU60B8**	162	198	1.0	146	5.0	2.3	258	0.108
P6KE180A	**STU65B8**	171	189	1.0	154	5.0	2.4	246	0.108
P6KE200	**STU60D0**	180	220	1.0	162	5.0	2.1	287	0.108
P6KE200A	**STU65D0**	190	210	1.0	171	5.0	2.2	274	0.108
P6KE220	**STU60D2**	198	242	1.0	175	5.0	1.75	344	0.108
P6KE220A	**STU65D2**	209	231	1.0	185	5.0	1.83	328	0.108
P6KE250	**STU60D5**	225	275	1.0	202	5.0	1.67	360	0.110
P6KE250A	**STU65D5**	237	263	1.0	214	5.0	1.75	344	0.110
P6KE300	**STU60E0**	270	330	1.0	243	5.0	1.40	430	0.110
P6KE300A	**STU65E0**	285	315	1.0	256	5.0	1.45	414	0.110
P6KE320	**STU60E2**	288	352	1.0	259	5.0	1.31	460	0.110
P6KE320A	**STU65E2**	303	337	1.0	272	5.0	1.35	445	0.110
P6KE350	**STU60E5**	315	385	1.0	284	5.0	1.20	504	0.110
P6KE350A	**STU65E5**	332	368	1.0	300	5.0	1.25	482	0.110
P6KE400	**STU60G0**	360	440	1.0	324	5.0	1.05	574	0.110
P6KE400A	**STU65G0**	380	420	1.0	342	5.0	1.10	548	0.110
P6KE440	**STU60G4**	396	484	1.0	356	5.0	0.95	631	0.110
P6KE440A	**STU65G4**	418	462	1.0	376	5.0	1.00	602	0.110

Notes:

(1) V_{BR} measured after It applied for 300 μs., It = square wave pulse or equivalent

(2) V_F = 3.5 Vmax., I_F = 50 A (6.8 V to 91 V)
V_F = 5.0 Vmax., I_F = 50 A (100 V to 440 V) per 1/2 square or equivalent sine wave
PW = 8.3 ms, duty cycle = 4 pulses per minute maximum

(3) For bidirectional use suffix "C" or "CA" (Axial Lead) / replace the third digit of type from "U" to "B" (SMD)

(4) "6KE" for Axial lead / "STU" or "STB" for SMD will be omitted on marking of the diode

(5) For bidirectional types having V_R of 10 V and under, the I_R limit is doubled

(6) For case type D2A (Axial Lead), we can support until the end of 2008.

Transient Voltage Suppressor Diodes

The plastic material carries U/L recognition 94V-0.

Type No.	Breakdown Voltage @ It (Note 1)			Working Peak Reverse Voltage	Maximum Reverse Leakage @ V_{RWM}	Maximum Reverse Current	Maximum Clamping Voltage @ I_{RSM}	Maximum Temperature Coefficient of V_{BR}
	V_{BR} (V)		It	V_{RWM}	I_R	I_{RSM}	V_{RSM}	
Unidirectional	Min.	Max.	(mA)	(V)	(mA)	(A)	(V)	(% / °C)
P6SMB Series, 600W, Case Type: SMB								
P6SMB6.8A	6.45	7.14	10	5.80	1000	57.0	10.5	0.057
P6SMB7.5A	7.13	7.88	10	6.40	500	53.0	11.3	0.061
P6SMB8.2A	7.79	8.61	10	7.02	200	50.0	12.1	0.065
P6SMB9.1A	8.65	9.55	1.0	7.78	50	45.0	13.4	0.068
P6SMB10A	9.50	10.5	1.0	8.55	10	41.0	14.5	0.073
P6SMB11A	10.5	11.6	1.0	9.40	5.0	38.0	15.6	0.075
P6SMB12A	11.4	12.6	1.0	10.2	5.0	36.0	16.7	0.078
P6SMB13A	12.4	13.7	1.0	11.1	5.0	33.0	18.2	0.081
P6SMB15A	14.3	15.8	1.0	12.8	5.0	28.0	21.2	0.084
P6SMB16A	15.2	16.8	1.0	13.6	5.0	27.0	22.5	0.086
P6SMB18A	17.1	18.9	1.0	15.3	5.0	24.0	25.2	0.088
P6SMB20A	19.0	21.0	1.0	17.1	5.0	22.0	27.7	0.090
P6SMB22A	20.9	23.1	1.0	18.8	5.0	20.0	30.6	0.092
P6SMB24A	22.8	25.2	1.0	20.5	5.0	18.0	33.2	0.094
P6SMB27A	25.7	28.4	1.0	23.1	5.0	16.0	37.5	0.096
P6SMB30A	28.5	31.5	1.0	25.6	5.0	14.4	41.4	0.097
P6SMB33A	31.4	34.7	1.0	28.2	5.0	13.2	45.7	0.098
P6SMB36A	34.2	37.8	1.0	30.8	5.0	12.0	49.9	0.099
P6SMB39A	37.1	41.0	1.0	33.3	5.0	11.2	53.9	0.100
P6SMB43A	40.9	45.2	1.0	36.8	5.0	10.1	59.3	0.101
P6SMB47A	44.7	49.4	1.0	40.2	5.0	9.3	64.8	0.101
P6SMB51A	48.5	53.6	1.0	43.6	5.0	8.6	70.1	0.102
P6SMB56A	53.2	58.8	1.0	47.8	5.0	7.8	77.0	0.103
P6SMB62A	58.9	65.1	1.0	53.0	5.0	7.1	85.0	0.104
P6SMB68A	64.6	71.4	1.0	58.1	5.0	6.5	92.0	0.104
P6SMB75A	71.3	78.8	1.0	64.1	5.0	5.8	103	0.105
P6SMB82A	77.9	86.1	1.0	70.1	5.0	5.3	113	0.105
P6SMB91A	86.5	95.5	1.0	77.8	5.0	4.8	125	0.106
P6SMB100A	95.0	105	1.0	85.5	5.0	4.4	137	0.106
P6SMB110A	105	116	1.0	94.0	5.0	4.0	152	0.107
P6SMB120A	114	126	1.0	102	5.0	3.6	165	0.107
P6SMB130A	124	137	1.0	111	5.0	3.3	179	0.107
P6SMB150A	143	158	1.0	128	5.0	2.9	207	0.108
P6SMB160A	152	168	1.0	136	5.0	2.7	219	0.108
P6SMB170A	162	179	1.0	145	5.0	2.6	234	0.108
P6SMB180A	171	189	1.0	154	5.0	2.4	246	0.108
P6SMB200A	190	210	1.0	171	5.0	2.2	274	0.108
P6SMB220A	209	231	1.0	185	5.0	1.83	328	0.108
P6SMB250A	237	263	1.0	214	5.0	1.75	344	0.110
P6SMB300A	285	315	1.0	256	5.0	1.45	414	0.110
P6SMB350A	332	368	1.0	300	5.0	1.25	482	0.110
P6SMB400A	380	420	1.0	342	5.0	1.10	548	0.110
P6SMB440A	418	462	1.0	376	5.0	1.00	602	0.110
P6SMB480A	456	504	1.0	408	5.0	0.91	658	0.110
P6SMB510A	485	535	1.0	434	5.0	0.86	698	0.110
P6SMB540A	513	567	1.0	459	5.0	0.81	740	0.110

Notes:

(1) V_{BR} measured after It applied for 300 μs., It = square wave pulse or equivalent

(2) V_F = 3.5 Vmax., I_F = 50 A (6.8 V to 91 V)
V_F = 5.0 Vmax., I_F = 50 A (100 V to 540 V) per 1/2 square or equivalent sine wave
PW = 8.3 ms, duty cycle = 4 pulses per minute maximum

(3) For bidirectional use suffix "CA" .Bidirectional types having V_R of 10 V and under, the I_R limit is doubled

(4) "P6SMB" will be omitted in marking on the diode

Transient Voltage Suppressor Diodes

The plastic material carries U/L recognition 94V-0.

Type No.	Breakdown Voltage @ I_T (1)			Reverse Stand-off Voltage	Maximum Reverse Leakage @ V_{WM}	Maximum Peak Pulse Surge Current	Maximum Clamping Voltage @ I_{PPM}
	V_{BR} (V)		I_T	V_{WM}	I_R (3)	I_{PPM} (2)	V_C
Unidirectional	Min.	Max.	(mA)	(V)	(μA)	(A)	(V)
SMBJ Series, 600W, Case Type: SMB							
SMBJ5.0	6.40	7.82	10	5.0	800	62.5	9.6
SMBJ5.0A	6.40	7.07	10	5.0	800	65.2	9.2
SMBJ6.0	6.67	8.15	10	6.0	800	52.6	11.4
SMBJ6.0A	6.67	7.37	10	6.0	800	58.3	10.3
SMBJ6.5	7.22	8.82	10	6.5	500	48.7	12.3
SMBJ6.5A	7.22	7.98	10	6.5	500	53.6	11.2
SMBJ7.0	7.78	9.51	10	7.0	200	45.1	13.3
SMBJ7.0A	7.78	8.6	10	7.0	200	50.0	12.0
SMBJ7.5	8.33	10.2	1.0	7.5	100	42.0	14.3
SMBJ7.5A	8.33	9.21	1.0	7.5	100	46.5	12.9
SMBJ8.0	8.89	10.9	1.0	8.0	50	40.0	15.0
SMBJ8.0A	8.89	9.83	1.0	8.0	50	44.1	13.6
SMBJ8.5	9.44	11.5	1.0	8.5	20	37.7	15.9
SMBJ8.5A	9.44	10.4	1.0	8.5	20	41.7	14.4
SMBJ9.0	10.0	12.2	1.0	9.0	10	35.5	16.9
SMBJ9.0A	10.0	11.1	1.0	9.0	10	39.0	15.4
SMBJ10	11.1	13.6	1.0	10	5.0	31.9	18.8
SMBJ10A	11.1	12.3	1.0	10	5.0	35.3	17.0
SMBJ11	12.2	14.9	1.0	11	5.0	29.9	20.1
SMBJ11A	12.2	13.5	1.0	11	5.0	33.0	18.2
SMBJ12	13.3	16.3	1.0	12	5.0	27.3	22.0
SMBJ12A	13.3	14.7	1.0	12	5.0	30.2	19.9
SMBJ13	14.4	17.6	1.0	13	5.0	25.2	23.8
SMBJ13A	14.4	15.9	1.0	13	5.0	27.9	21.5
SMBJ14	15.6	19.1	1.0	14	5.0	23.3	25.8
SMBJ14A	15.6	17.2	1.0	14	5.0	25.8	23.2
SMBJ15	16.7	20.4	1.0	15	5.0	22.3	26.9
SMBJ15A	16.7	18.5	1.0	15	5.0	24.0	24.4
SMBJ16	17.8	21.8	1.0	16	5.0	20.8	28.8
SMBJ16A	17.8	19.7	1.0	16	5.0	23.1	26.0
SMBJ17	18.9	23.1	1.0	17	5.0	19.7	30.5
SMBJ17A	18.9	20.9	1.0	17	5.0	21.7	27.6
SMBJ18	20.0	24.4	1.0	18	5.0	18.6	32.2
SMBJ18A	20.0	22.1	1.0	18	5.0	20.5	29.2
SMBJ20	22.2	27.1	1.0	20	5.0	16.7	35.8
SMBJ20A	22.2	24.5	1.0	20	5.0	18.5	32.4
SMBJ22	24.4	29.8	1.0	22	5.0	15.2	39.4
SMBJ22A	24.4	26.9	1.0	22	5.0	16.9	35.5
SMBJ24	26.7	32.6	1.0	24	5.0	14.0	43.0
SMBJ24A	26.7	29.5	1.0	24	5.0	15.4	38.9
SMBJ26	28.9	35.3	1.0	26	5.0	12.4	46.6
SMBJ26A	28.9	31.9	1.0	26	5.0	14.2	42.1
SMBJ28	31.1	38	1.0	28	5.0	12.0	50.0
SMBJ28A	31.1	34.4	1.0	28	5.0	13.2	45.4
SMBJ30	33.3	40.7	1.0	30	5.0	11.2	53.5
SMBJ30A	33.3	36.8	1.0	30	5.0	12.4	48.4
SMBJ33	36.7	44.9	1.0	33	5.0	10.2	59.0
SMBJ33A	36.7	40.6	1.0	33	5.0	11.3	53.3
SMBJ36	40.0	48.9	1.0	36	5.0	9.3	64.3
SMBJ36A	40.0	44.2	1.0	36	5.0	10.3	58.1

Transient Voltage Suppressor Diodes

The plastic material carries U/L recognition 94V-0.

Type No.	Breakdown Voltage @ I_T (1)			Reverse Stand-off Voltage	Maximum Reverse Leakage @ V_{WM}	Maximum Peak Pulse Surge Current	Maximum Clamping Voltage @ I_{PPM}
	V_{BR} (V)		I_T	V_{WM}	I_R (3)	I_{PPM} (2)	V_C
Unidirectional	Min.	Max.	(mA)	(V)	(μA)	(A)	(V)
SMBJ Series, 600W, Case Type: SMB							
SMBJ40	44.4	54.3	1.0	40	5.0	8.4	71.4
SMBJ40A	44.4	49.1	1.0	40	5.0	9.3	64.5
SMBJ43	47.8	58.4	1.0	43	5.0	7.8	76.7
SMBJ43A	47.8	52.8	1.0	43	5.0	8.6	69.4
SMBJ45	50.0	61.1	1.0	45	5.0	7.5	80.3
SMBJ45A	50.0	55.3	1.0	45	5.0	8.3	72.7
SMBJ48	53.3	65.1	1.0	48	5.0	7.0	85.5
SMBJ48A	53.3	58.9	1.0	48	5.0	7.7	77.4
SMBJ51	56.7	69.3	1.0	51	5.0	6.6	91.1
SMBJ51A	56.7	62.7	1.0	51	5.0	7.3	82.4
SMBJ54	60.0	73.3	1.0	54	5.0	6.2	96.3
SMBJ54A	60.0	66.3	1.0	54	5.0	6.9	87.1
SMBJ58	64.4	78.7	1.0	58	5.0	5.8	103
SMBJ58A	64.4	71.2	1.0	58	5.0	6.4	93.6
SMBJ60	66.7	81.5	1.0	60	5.0	5.6	107
SMBJ60A	66.7	73.7	1.0	60	5.0	6.2	96.8
SMBJ64	71.1	86.9	1.0	64	5.0	5.3	114
SMBJ64A	71.1	78.6	1.0	64	5.0	5.8	103
SMBJ70	77.8	95.1	1.0	70	5.0	4.8	125
SMBJ70A	77.8	86.0	1.0	70	5.0	5.3	113
SMBJ75	83.3	102	1.0	75	5.0	4.5	134
SMBJ75A	83.3	92.1	1.0	75	5.0	4.9	121
SMBJ78	86.7	106	1.0	78	5.0	4.3	139
SMBJ78A	86.7	95.8	1.0	78	5.0	4.7	126
SMBJ85	94.4	115	1.0	85	5.0	3.9	151
SMBJ85A	94.4	104	1.0	85	5.0	4.4	137
SMBJ90	100	122	1.0	90	5.0	3.8	160
SMBJ90A	100	111	1.0	90	5.0	4.1	146
SMBJ100	111	136	1.0	100	5.0	3.4	179
SMBJ100A	111	123	1.0	100	5.0	3.7	162
SMBJ110	122	149	1.0	110	5.0	3.0	196
SMBJ110A	122	135	1.0	110	5.0	3.4	177
SMBJ120	133	163	1.0	120	5.0	2.8	214
SMBJ120A	133	147	1.0	120	5.0	3.1	193
SMBJ130	144	176	1.0	130	5.0	2.6	231
SMBJ130A	144	159	1.0	130	5.0	2.9	209
SMBJ150	167	204	1.0	150	5.0	2.2	268
SMBJ150A	167	185	1.0	150	5.0	2.5	243
SMBJ160	178	218	1.0	160	5.0	2.1	287
SMBJ160A	178	197	1.0	160	5.0	2.3	259
SMBJ170	189	231	1.0	170	5.0	2.0	304
SMBJ170A	189	209	1.0	170	5.0	2.2	275
SMBJ188	209	255	1.0	188	5.0	1.7	344
SMBJ188A	209	231	1.0	188	5.0	2.0	328

Notes: (1) Pulse test : tp ≤ 50ms
(2) For bidirectional use suffix "C" or "CA"
(3) For bidirectional types with V_{WM} of 10 Volts and less, the I_R limit is doubled
(4) For the bidirectional SMBJ5.0CA, the maximum V_{BR} is 7.25V
(5) "SMBJ" will be omitted on marking of the diode

Transient Voltage Suppressor Diodes

The plastic material carries U/L recognition 94V-0.

Type No.	Breakdown Voltage @ It (Note 1)		Working Peak Reverse Voltage	Maximum Reverse Leakage @ V_{RWM}	Maximum Reverse Current	Maximum Clamping Voltage @ I_{RSM}	Maximum Temperature Coefficient of V_{BR}
	V_{BR} (V)	It	V_{RWM}	I_R	I_{RSM}	V_{RSM}	
Bi-directional	Min.	(mA)	(V)	(μA)	(A)	(V)	(% / °C)

EPS5 Series, 1000W, Case Type: M1A

EPS5	6.0	1.0	5	50	10.0	9.5	0.030
EPS8	9.0	1.0	8	2	10.0	13.7	0.040
EPS12	13.8	1.0	12	1	10.0	21.6	0.050
EPS15	16.7	1.0	15	1	10.0	26.0	0.055
EPS17	19.0	1.0	17	1	10.0	29.2	0.060
EPS24	28.4	1.0	24	1	10.0	43.2	0.070
EPS28	31.0	1.0	28	1	10.0	47.8	0.075
EPS33	36.8	1.0	33	1	10.0	56.7	0.080
EPS48	54.0	1.0	48	1	10.0	84.3	0.090

Transient Voltage Suppressor Diodes

The plastic material carries U/L recognition 94V-O.

Type No.	Breakdown Voltage @ It (Note 1)		Working Peak Reverse Voltage	Maximum Reverse Leakage @ V_{RWM}	Maximum Reverse Current	Maximum Clamping Voltage @ I_{RSM}	Maximum Temperature Coefficient of V_{BR}
	V_{BR} (V)	It	V_{RWM}	I_R	I_{RSM}	V_{RSM}	
Unidirectional	Min.	(mA)	(V)	(μA)	(A)	(V)	(% / °C)

1N5610 - 1N5613, 1500W, Case Type: DO-201



1N5610	33.0	1.0	30.5	5	32	47.6	0.093
1N5611	43.7	1.0	40.3	5	24	63.5	0.094
1N5612	54.0	1.0	49.0	5	19	78.5	0.096
1N5613	191	1.0	175	5	5.7	265	0.100

Transient Voltage Suppressor Diodes

The plastic material carries U/L recognition 94V-0.

Type No.		Breakdown Voltage @ It (Note 1)			Working Peak Reverse Voltage	Maximum Reverse Leakage @ V_{RWM}	Maximum Reverse Current	Maximum Clamping Voltage @ I_{RSM}	Maximum Temperature Coefficient of V_{BR}
Unidirectional		V_{BR} (V)		It	V_{RWM}	I_R	I_{RSM}	V_{RSM}	
Axial Lead	SMD	Min.	Max.	(mA)	(V)	(μA)	(A)	(V)	(% / °C)

1N6267/STUN Series, 1,500 W, Case Type: DO-201/SMC





1N6267	**STUN06I**	6.12	7.48	10	5.50	1000	139	10.8	0.057
1N6267A	**STUN56I**	6.45	7.14	10	5.80	1000	143	10.5	0.057
1N6268	**STUN07F**	6.75	8.25	10	6.05	500	128	11.7	0.061
1N6268A	**STUN57F**	7.13	7.88	10	6.40	500	132	11.3	0.061
1N6269	**STUN08C**	7.38	9.02	10	6.63	200	120	12.5	0.065
1N6269A	**STUN58C**	7.79	8.61	10	7.02	200	124	12.1	0.065
1N6270	**STUN09B**	8.19	10.0	1.0	7.37	50	109	13.8	0.068
1N6270A	**STUN59B**	8.65	9.55	1.0	7.78	50	112	13.4	0.068
1N6271	**STUN010**	9.00	11.0	1.0	8.10	10	100	15.0	0.073
1N6271A	**STUN510**	9.50	10.5	1.0	8.55	10	103	14.5	0.073
1N6272	**STUN011**	9.90	12.1	1.0	8.92	5.0	93.0	16.2	0.075
1N6272A	**STUN511**	10.5	11.6	1.0	9.40	5.0	96.0	15.6	0.075
1N6273	**STUN012**	10.8	13.2	1.0	9.72	5.0	87.0	17.3	0.078
1N6273A	**STUN512**	11.4	12.6	1.0	10.2	5.0	90.0	16.7	0.078
1N6274	**STUN013**	11.7	14.3	1.0	10.5	5.0	79.0	19.0	0.081
1N6274A	**STUN513**	12.4	13.7	1.0	11.1	5.0	82.0	18.2	0.081
1N6275	**STUN015**	13.5	16.3	1.0	12.1	5.0	68.0	22.0	0.084
1N6275A	**STUN515**	14.3	15.8	1.0	12.8	5.0	71.0	21.2	0.084
1N6276	**STUN016**	14.4	17.6	1.0	12.9	5.0	64.0	23.5	0.086
1N6276A	**STUN516**	15.2	16.8	1.0	13.6	5.0	67.0	22.5	0.086
1N6277	**STUN018**	16.2	19.8	1.0	14.5	5.0	56.5	26.5	0.088
1N6277A	**STUN518**	17.1	18.9	1.0	15.3	5.0	59.5	25.2	0.088
1N6278	**STUN020**	18.0	22.0	1.0	16.2	5.0	51.5	29.1	0.090
1N6278A	**STUN520**	19.0	21.0	1.0	17.1	5.0	54.0	27.7	0.090
1N6279	**STUN022**	19.8	24.2	1.0	17.8	5.0	47.0	31.9	0.092
1N6279A	**STUN522**	20.9	23.1	1.0	18.8	5.0	49.0	30.6	0.092
1N6280	**STUN024**	21.6	26.4	1.0	19.4	5.0	43.0	34.7	0.094
1N6280A	**STUN524**	22.8	25.2	1.0	20.5	5.0	45.0	33.2	0.094
1N6281	**STUN027**	24.3	29.7	1.0	21.8	5.0	38.5	39.1	0.096
1N6281A	**STUN527**	25.7	28.4	1.0	23.1	5.0	40.0	37.5	0.096
1N6282	**STUN030**	27.0	33.0	1.0	24.3	5.0	34.5	43.5	0.097
1N6282A	**STUN530**	28.5	31.5	1.0	25.6	5.0	36.0	41.4	0.097
1N6283	**STUN033**	29.7	36.3	1.0	26.8	5.0	31.5	47.7	0.098
1N6283A	**STUN533**	31.4	34.7	1.0	28.2	5.0	33.0	45.7	0.098
1N6284	**STUN036**	32.4	39.6	1.0	29.1	5.0	29.0	52.0	0.099
1N6284A	**STUN536**	34.2	37.8	1.0	30.8	5.0	30.0	49.9	0.099
1N6285	**STUN039**	35.1	42.9	1.0	31.6	5.0	26.5	56.4	0.100
1N6285A	**STUN539**	37.1	41.0	1.0	33.3	5.0	28.0	53.9	0.100
1N6286	**STUN043**	38.7	47.3	1.0	34.8	5.0	24.0	61.9	0.101
1N6286A	**STUN543**	40.9	45.2	1.0	36.8	5.0	25.3	59.3	0.101
1N6287	**STUN047**	42.3	51.7	1.0	38.1	5.0	22.2	67.8	0.101
1N6287A	**STUN547**	44.7	49.4	1.0	40.2	5.0	23.2	64.8	0.101

Transient Voltage Suppressor Diodes

The plastic material carries U/L recognition 94V-0.

Type No.		Breakdown Voltage @ It (Note 1)			Working Peak Reverse Voltage	Maximum Reverse Leakage @ V_{RWM}	Maximum Reverse Current	Maximum Clamping Voltage @ I_{RSM}	Maximum Temperature Coefficient of V_{BR}
Unidirectional		V_{BR} (V)		It	V_{RWM}	I_R	I_{RSM}	V_{RSM}	
Axial Lead	SMD	Min.	Max.	(mA)	(V)	(μA)	(A)	(V)	(% / °C)

1N6267/STUN Series, 1,500 W, Case Type: DO-201/SMC



1N6288	**STUN051**	45.9	56.1	1.0	41.3	5.0	20.4	73.5	0.102
1N6288A	**STUN551**	48.5	53.6	1.0	43.6	5.0	21.4	70.1	0.102
1N6289	**STUN056**	50.4	61.6	1.0	45.4	5.0	18.6	80.5	0.103
1N6289A	**STUN556**	53.2	58.8	1.0	47.8	5.0	19.5	77.0	0.103
1N6290	**STUN062**	55.8	68.2	1.0	50.2	5.0	16.9	89.0	0.104
1N6290A	**STUN562**	58.9	65.1	1.0	53.0	5.0	17.7	85.0	0.104
1N6291	**STUN068**	61.2	74.8	1.0	55.1	5.0	15.3	98.0	0.104
1N6291A	**STUN568**	64.6	71.4	1.0	58.1	5.0	16.3	92.0	0.104
1N6292	**STUN075**	67.5	82.5	1.0	60.7	5.0	13.9	108	0.105
1N6292A	**STUN575**	71.3	78.8	1.0	64.1	5.0	14.6	103	0.105
1N6293	**STUN082**	73.8	90.2	1.0	66.4	5.0	12.7	118	0.105
1N6293A	**STUN582**	77.9	86.1	1.0	70.1	5.0	13.3	113	0.105
1N6294	**STUN091**	81.9	100	1.0	73.7	5.0	11.4	131	0.106
1N6294A	**STUN591**	86.5	95.5	1.0	77.8	5.0	12.0	125	0.106
1N6295	**STUN0B0**	90.0	110	1.0	81.0	5.0	10.4	144	0.106
1N6295A	**STUN5B0**	95.0	105	1.0	85.5	5.0	11.0	137	0.106
1N6296	**STUN0B1**	99.0	121	1.0	89.2	5.0	9.5	158	0.107
1N6296A	**STUN5B1**	105	116	1.0	94.0	5.0	9.9	152	0.107
1N6297	**STUN0B2**	108	132	1.0	97.2	5.0	8.7	173	0.107
1N6297A	**STUN5B2**	114	126	1.0	102	5.0	9.1	165	0.107
1N6298	**STUN0B3**	117	143	1.0	105	5.0	8.0	187	0.107
1N6298A	**STUN5B3**	124	137	1.0	111	5.0	8.4	179	0.107
1N6299	**STUN0B5**	135	165	1.0	121	5.0	7.0	215	0.108
1N6299A	**STUN5B5**	143	158	1.0	128	5.0	7.2	207	0.108
1N6300	**STUN0B6**	144	176	1.0	130	5.0	6.5	230	0.108
1N6300A	**STUN5B6**	152	168	1.0	136	5.0	6.8	219	0.108
1N6301	**STUN0B7**	153	187	1.0	138	5.0	6.2	244	0.108
1N6301A	**STUN5B7**	162	179	1.0	145	5.0	6.4	234	0.108
1N6302	**STUN0B8**	162	198	1.0	146	5.0	5.8	258	0.108
1N6302A	**STUN5B8**	171	189	1.0	154	5.0	6.1	246	0.108
1N6303	**STUN0D0**	180	220	1.0	162	5.0	5.2	287	0.108
1N6303A	**STUN5D0**	190	210	1.0	171	5.0	5.5	274	0.108

Notes:

(1) V_{BR} measured after It applied for 300 μs., It = square wave pulse or equivalent

(2) V_F = 3.5 Vmax., I_F = 100 A (6.8 V to 91 V)
V_F = 5.0 Vmax., I_F = 100 A (100 V to 200 V) per 1/2 square or equivalent sine wave
PW = 8.3 ms, duty cycle = 4 pulses per minute maximum

(3) For bidirectional use suffix "C" or "CA" (Axial Lead) / replace the third letter of type from "U" to "B" (SMD)

(4) "STU" or "STB" will be omitted on marking of the diode.

(5) Add suffix "L" (Axial Lead) for case type DO-201AD

(6) For bidirectional types have V_R of 10 V and under, the I_R limit is doubled.

Transient Voltage Suppressor Diodes

The plastic material carries U/L recognition 94V-0.

Type No.		Breakdown Voltage @ It (Note 1)			Working Peak Reverse Voltage	Maximum Reverse Leakage @ V_{RWM}	Maximum Reverse Current	Maximum Clamping Voltage @ I_{RSM}	Maximum Temperature Coefficient of V_{BR}
Unidirectional		V_{BR} (V)		It	V_{RWM}	I_R	I_{RSM}	V_{RSM}	
Axial Lead	SMD	Min.	Max.	(mA)	(V)	(μA)	(A)	(V)	(% / °C)

1.5KE/STUK Series, 1,500 W, Case Type: DO-201/SMC





1.5KE6.8	**STUK06I**	6.12	7.48	10	5.50	1000	139	10.8	0.057
1.5KE6.8A	**STUK56I**	6.45	7.14	10	5.80	1000	143	10.5	0.057
1.5KE7.5	**STUK07F**	6.75	8.25	10	6.05	500	128	11.7	0.061
1.5KE7.5A	**STUK57F**	7.13	7.88	10	6.40	500	132	11.3	0.061
1.5KE8.2	**STUK08C**	7.38	9.02	10	6.63	200	120	12.5	0.065
1.5KE8.2A	**STUK58C**	7.79	8.61	10	7.02	200	124	12.1	0.065
1.5KE9.1	**STUK09B**	8.19	10.0	1.0	7.37	50	109	13.8	0.068
1.5KE9.1A	**STUK59B**	8.65	9.55	1.0	7.78	50	112	13.4	0.068
1.5KE10	**STUK010**	9.00	11.0	1.0	8.10	10	100	15.0	0.073
1.5KE10A	**STUK510**	9.50	10.5	1.0	8.55	10	103	14.5	0.073
1.5KE11	**STUK011**	9.90	12.1	1.0	8.92	5.0	93.0	16.2	0.075
1.5KE11A	**STUK511**	10.5	11.6	1.0	9.40	5.0	96.0	15.6	0.075
1.5KE12	**STUK012**	10.8	13.2	1.0	9.72	5.0	87.0	17.3	0.078
1.5KE12A	**STUK512**	11.4	12.6	1.0	10.2	5.0	90.0	16.7	0.078
1.5KE13	**STUK013**	11.7	14.3	1.0	10.5	5.0	79.0	19.0	0.081
1.5KE13A	**STUK513**	12.4	13.7	1.0	11.1	5.0	82.0	18.2	0.081
1.5KE15	**STUK015**	13.5	16.5	1.0	12.1	5.0	68.0	22.0	0.084
1.5KE15A	**STUK515**	14.3	15.8	1.0	12.8	5.0	71.0	21.2	0.084
1.5KE16	**STUK016**	14.4	17.6	1.0	12.9	5.0	64.0	23.5	0.086
1.5KE16A	**STUK516**	15.2	16.8	1.0	13.6	5.0	67.0	22.5	0.086
1.5KE18	**STUK018**	16.2	19.8	1.0	14.5	5.0	56.5	26.5	0.088
1.5KE18A	**STUK518**	17.1	18.9	1.0	15.3	5.0	59.5	25.2	0.088
1.5KE20	**STUK020**	18.0	22.0	1.0	16.2	5.0	51.5	29.1	0.090
1.5KE20A	**STUK520**	19.0	21.0	1.0	17.1	5.0	54.0	27.7	0.090
1.5KE22	**STUK022**	19.8	24.2	1.0	17.8	5.0	47.0	31.9	0.092
1.5KE22A	**STUK522**	20.9	23.1	1.0	18.8	5.0	49.0	30.6	0.092
1.5KE24	**STUK024**	21.6	26.4	1.0	19.4	5.0	43.0	34.7	0.094
1.5KE24A	**STUK524**	22.8	25.2	1.0	20.5	5.0	45.0	33.2	0.094
1.5KE27	**STUK027**	24.3	29.7	1.0	21.8	5.0	38.5	39.1	0.096
1.5KE27A	**STUK527**	25.7	28.4	1.0	23.1	5.0	40.0	37.5	0.096
1.5KE30	**STUK030**	27.0	33.0	1.0	24.3	5.0	34.5	43.5	0.097
1.5KE30A	**STUK530**	28.5	31.5	1.0	25.6	5.0	36.0	41.4	0.097
1.5KE33	**STUK033**	29.7	36.3	1.0	26.8	5.0	31.5	47.7	0.098
1.5KE33A	**STUK533**	31.4	34.7	1.0	28.2	5.0	33.0	45.7	0.098
1.5KE36	**STUK036**	32.4	39.6	1.0	29.1	5.0	29.0	52.0	0.099
1.5KE36A	**STUK536**	34.2	37.8	1.0	30.8	5.0	30.0	49.9	0.099
1.5KE39	**STUK039**	35.1	42.9	1.0	31.6	5.0	26.5	56.4	0.100
1.5KE39A	**STUK539**	37.1	41.0	1.0	33.3	5.0	28.0	53.9	0.100
1.5KE43	**STUK043**	38.7	47.3	1.0	34.8	5.0	24.0	61.9	0.101
1.5KE43A	**STUK543**	40.9	45.2	1.0	36.8	5.0	25.3	59.3	0.101
1.5KE47	**STUK047**	42.3	51.7	1.0	38.1	5.0	22.2	67.8	0.101
1.5KE47A	**STUK547**	44.7	49.4	1.0	40.2	5.0	23.2	64.8	0.101
1.5KE51	**STUK051**	45.9	56.1	1.0	41.3	5.0	20.4	73.5	0.102
1.5KE51A	**STUK551**	48.5	53.6	1.0	43.6	5.0	21.4	70.1	0.102
1.5KE56	**STUK056**	50.4	61.6	1.0	45.4	5.0	18.6	80.5	0.103
1.5KE56A	**STUK556**	53.2	58.8	1.0	47.8	5.0	19.5	77.0	0.103
1.5KE62	**STUK062**	55.8	68.2	1.0	50.2	5.0	16.9	89.0	0.104
1.5KE62A	**STUK562**	58.9	65.1	1.0	53.0	5.0	17.7	85.0	0.104

Transient Voltage Suppressor Diodes

The plastic material carries U/L recognition 94V-0.

Type No.		Breakdown Voltage @ It (Note 1)			Working Peak Reverse Voltage	Maximum Reverse Leakage @ V_{RWM}	Maximum Reverse Current	Maximum Clamping Voltage @ I_{RSM}	Maximum Temperature Coefficient of V_{BR}
Unidirectional		V_{BR} (V)		It	V_{RWM}	I_R	I_{RSM}	V_{RSM}	
Axial Lead	SMD	Min.	Max.	(mA)	(V)	(μA)	(A)	(V)	(% / °C)

1.5KE/STUK Series, 1,500 W, Case Type: DO-201/SMC



1.5KE68	**STUK068**	61.2	74.8	1.0	55.1	5.0	15.3	98.0	0.104
1.5KE68A	**STUK568**	64.6	71.4	1.0	58.1	5.0	16.3	92.0	0.104
1.5KE75	**STUK075**	67.5	82.5	1.0	60.7	5.0	13.9	108	0.105
1.5KE75A	**STUK575**	71.3	78.8	1.0	64.1	5.0	14.6	103	0.105
1.5KE82	**STUK082**	73.8	90.2	1.0	66.4	5.0	12.7	118	0.105
1.5KE82A	**STUK582**	77.9	86.1	1.0	70.1	5.0	13.3	113	0.105
1.5KE91	**STUK091**	81.9	100	1.0	73.7	5.0	11.4	131	0.106
1.5KE91A	**STUK591**	86.5	95.5	1.0	77.8	5.0	12.0	125	0.106
1.5KE100	**STUK0B0**	90.0	110	1.0	81.0	5.0	10.4	144	0.106
1.5KE100A	**STUK5B0**	95.0	105	1.0	85.5	5.0	11.0	137	0.106
1.5KE110	**STUK0B1**	99.0	121	1.0	89.2	5.0	9.5	158	0.107
1.5KE110A	**STUK5B1**	105	116	1.0	94.0	5.0	9.9	152	0.107
1.5KE120	**STUK0B2**	108	132	1.0	97.2	5.0	8.7	173	0.107
1.5KE120A	**STUK5B2**	114	126	1.0	102	5.0	9.1	165	0.107
1.5KE130	**STUK0B3**	117	143	1.0	105	5.0	8.0	187	0.107
1.5KE130A	**STUK5B3**	124	137	1.0	111	5.0	8.4	179	0.107
1.5KE150	**STUK0B5**	135	165	1.0	121	5.0	7.0	215	0.108
1.5KE150A	**STUK5B5**	143	158	1.0	128	5.0	7.2	207	0.108
1.5KE160	**STUK0B6**	144	176	1.0	130	5.0	6.5	230	0.108
1.5KE160A	**STUK5B6**	152	168	1.0	136	5.0	6.8	219	0.108
1.5KE170	**STUK0B7**	153	187	1.0	138	5.0	6.2	244	0.108
1.5KE170A	**STUK5B7**	162	179	1.0	145	5.0	6.4	234	0.108
1.5KE180	**STUK0B8**	162	198	1.0	146	5.0	5.8	258	0.108
1.5KE180A	**STUK5B8**	171	189	1.0	154	5.0	6.1	246	0.108
1.5KE200	**STUK0D0**	180	220	1.0	162	5.0	5.2	287	0.108
1.5KE200A	**STUK5D0**	190	210	1.0	171	5.0	5.5	274	0.108
1.5KE220	**STUK0D2**	198	242	1.0	175	5.0	4.3	344	0.108
1.5KE220A	**STUK5D2**	209	231	1.0	185	5.0	4.6	328	0.108
1.5KE250	**STUK0D5**	225	275	1.0	202	5.0	4.2	360	0.110
1.5KE250A	**STUK5D5**	237	263	1.0	214	5.0	4.4	344	0.110
1.5KE300	**STUK0E0**	270	330	1.0	243	5.0	3.5	430	0.110
1.5KE300A	**STUK5E0**	285	315	1.0	256	5.0	3.6	414	0.110
1.5KE350	**STUK0E5**	315	385	1.0	284	5.0	3.0	504	0.110
1.5KE350A	**STUK5E5**	332	368	1.0	300	5.0	3.1	482	0.110
1.5KE400	**STUK0G0**	360	440	1.0	324	5.0	2.6	574	0.110
1.5KE400A	**STUK5G0**	380	420	1.0	342	5.0	2.7	548	0.110
1.5KE440	**STUK0G4**	396	484	1.0	356	5.0	2.4	631	0.110
1.5KE440A	**STUK5G4**	418	462	1.0	376	5.0	2.5	602	0.110

Notes:

(1) V_{BR} measured after It applied for 300 μs., It = square wave pulse or equivalent

(2) V_F = 3.5 Vmax., I_F = 100 A (6.8 V to 91 V)
V_F = 5.0 Vmax., I_F = 100 A (100 V to 440 V) per 1/2 square or equivalent sine wave
PW = 8.3 ms, duty cycle = 4 pulses per minute maximum

(3) For bidirectional use suffix "C" or "CA" (Axial Lead) / replace the third letter of type from "U" to "B" (SMD)

(4) "1.5" for axial lead / "STU" or "STB" for SMD will be omitted on marking of the diode.

(5) Use suffix "L" (Axial Lead) for case type DO-201AD

(6) For bidirectional types have V_R of 10 V and under, the I_R limit is doubled

Transient Voltage Suppressor Diodes

The plastic material carries U/L recognition 94V-0.

Type No.	Breakdown Voltage @ I_T (1)			Working Peak Reverse Voltage	Maximum Reverse Leakage @ V_{WM}	Maximum Peak Pulse Surge Current	Maximum Clamping Voltage @ I_{PPM}
	V_{BR} (V)		I_T	V_{WM}	I_R (3)	I_{PPM}	V_C
Unidirectional	Min.	Max.	(mA)	(V)	(μA)	(A)	(V)
SMCJ5.0	6.40	7.82	10	5.0	1000	156.3	9.6
SMCJ5.0A	6.40	7.07	10	5.0	1000	163.0	9.2
SMCJ6.0	6.67	8.15	10	6.0	1000	131.6	11.4
SMCJ6.0A	6.67	7.37	10	6.0	1000	145.6	10.3
SMCJ6.5	7.22	8.82	10	6.5	500	122.0	12.3
SMCJ6.5A	7.22	7.98	10	6.5	500	133.9	11.2
SMCJ7.0	7.78	9.51	10	7.0	200	112.8	13.3
SMCJ7.0A	7.78	8.6	10	7.0	200	125.0	12.0
SMCJ7.5	8.33	10.2	1.0	7.5	100	104.9	14.3
SMCJ7.5A	8.33	9.21	1.0	7.5	100	116.3	12.9
SMCJ8.0	8.89	10.9	1.0	8.0	50	100.0	15.0
SMCJ8.0A	8.89	9.83	1.0	8.0	50	110.3	13.6
SMCJ8.5	9.44	11.5	1.0	8.5	20	94.3	15.9
SMCJ8.5A	9.44	10.4	1.0	8.5	20	104.2	14.4
SMCJ9.0	10.0	12.2	1.0	9.0	10	88.8	16.9
SMCJ9.0A	10.0	11.1	1.0	9.0	10	97.4	15.4
SMCJ10	11.1	13.6	1.0	10	5.0	79.8	18.8
SMCJ10A	11.1	12.3	1.0	10	5.0	88.2	17.0
SMCJ11	12.2	14.9	1.0	11	5.0	74.6	20.1
SMCJ11A	12.2	13.5	1.0	11	5.0	82.4	18.2
SMCJ12	13.3	16.3	1.0	12	5.0	68.2	22.0
SMCJ12A	13.3	14.7	1.0	12	5.0	75.4	19.9
SMCJ13	14.4	17.6	1.0	13	1.0	63.0	23.8
SMCJ13A	14.4	15.9	1.0	13	1.0	69.8	21.5
SMCJ14	15.6	19.1	1.0	14	1.0	58.1	25.8
SMCJ14A	15.6	17.2	1.0	14	1.0	64.7	23.2
SMCJ15	16.7	20.4	1.0	15	1.0	55.8	26.9
SMCJ15A	16.7	18.5	1.0	15	1.0	61.5	24.4
SMCJ16	17.8	21.8	1.0	16	1.0	52.1	28.8
SMCJ16A	17.8	19.7	1.0	16	1.0	57.7	26.0
SMCJ17	18.9	23.1	1.0	17	1.0	49.2	30.5
SMCJ17A	18.9	20.9	1.0	17	1.0	54.3	27.6
SMCJ18	20.0	24.4	1.0	18	1.0	46.6	32.2
SMCJ18A	20.0	22.1	1.0	18	1.0	51.4	29.2
SMCJ20	22.2	27.1	1.0	20	1.0	41.9	35.8
SMCJ20A	22.2	24.5	1.0	20	1.0	46.3	32.4
SMCJ22	24.4	29.8	1.0	22	1.0	38.1	39.4
SMCJ22A	24.4	26.9	1.0	22	1.0	42.3	35.5
SMCJ24	26.7	32.6	1.0	24	1.0	34.9	43.0
SMCJ24A	26.7	29.5	1.0	24	1.0	38.6	38.9
SMCJ26	28.9	35.3	1.0	26	1.0	32.2	46.6
SMCJ26A	28.9	31.9	1.0	26	1.0	35.6	42.1
SMCJ28	31.1	38.0	1.0	28	1.0	30.0	50.0
SMCJ28A	31.1	34.4	1.0	28	1.0	33.0	45.4
SMCJ30	33.3	40.7	1.0	30	1.0	28.0	53.5
SMCJ30A	33.3	36.8	1.0	30	1.0	31.0	48.4
SMCJ33	36.7	44.9	1.0	33	1.0	25.4	59.0
SMCJ33A	36.7	40.6	1.0	33	1.0	28.1	53.3
SMCJ36	40.0	48.9	1.0	36	1.0	23.3	64.3
SMCJ36A	40.0	44.2	1.0	36	1.0	25.8	58.1
SMCJ40	44.4	54.3	1.0	40	1.0	21.0	71.4
SMCJ40A	44.4	49.1	1.0	40	1.0	23.3	64.5
SMCJ43	47.8	58.4	1.0	43	1.0	19.6	76.7
SMCJ43A	47.8	52.8	1.0	43	1.0	21.6	69.4
SMCJ45	50.0	61.1	1.0	45	1.0	18.7	80.3

SMCJ Series, 1,500W, Case Type: SMC



Transient Voltage Suppressor Diodes

The plastic material carries U/L recognition 94V-0.

Type No.	Breakdown Voltage @ I_T (1)			Working Peak Reverse Voltage	Maximum Reverse Leakage @ V_{WM}	Maximum Peak Pulse Surge Current	Maximum Clamping Voltage @ I_{PPM}
	V_{BR} (V)		I_T	V_{WM}	I_R (3)	I_{PPM}	V_C
Unidirectional	Min.	Max.	(mA)	(V)	(μA)	(A)	(V)

SMCJ Series, 1,500W, Case Type: SMC



SMCJ45A	50.0	55.3	1.0	45	1.0	20.6	72.7
SMCJ48	53.3	65.1	1.0	48	1.0	17.5	85.5
SMCJ48A	53.3	58.9	1.0	48	1.0	19.4	77.4
SMCJ51	56.7	69.3	1.0	51	1.0	16.5	91.1
SMCJ51A	56.7	62.7	1.0	51	1.0	18.2	82.4
SMCJ54	60.0	73.3	1.0	54	1.0	15.6	96.3
SMCJ54A	60.0	66.3	1.0	54	1.0	17.2	87.1
SMCJ58	64.4	78.7	1.0	58	1.0	14.6	103
SMCJ58A	64.4	71.2	1.0	58	1.0	16.0	93.6
SMCJ60	66.7	81.5	1.0	60	1.0	14.0	107
SMCJ60A	66.7	73.7	1.0	60	1.0	15.5	96
SMCJ64	71.1	86.4	1.0	64	1.0	13.2	114
SMCJ64A	71.1	78.6	1.0	64	1.0	14.6	103
SMCJ70	77.8	95.1	1.0	70	1.0	12.0	125
SMCJ70A	77.8	86	1.0	70	1.0	13.3	113
SMCJ75	83.3	102	1.0	75	1.0	11.2	134
SMCJ75A	83.3	92.1	1.0	75	1.0	12.4	121
SMCJ78	86.7	106	1.0	78	1.0	10.8	139
SMCJ78A	86.7	95.8	1.0	78	1.0	11.9	126
SMCJ85	94.4	115	1.0	85	1.0	9.9	151
SMCJ85A	94.4	104	1.0	85	1.0	10.9	137
SMCJ90	100	122	1.0	90	1.0	9.4	160
SMCJ90A	100	111	1.0	90	1.0	10.3	146
SMCJ100	111	136	1.0	100	1.0	8.4	179
SMCJ100A	111	123	1.0	100	1.0	9.3	162
SMCJ110	122	149	1.0	110	1.0	7.7	196
SMCJ110A	122	135	1.0	110	1.0	8.5	177
SMCJ120	133	163	1.0	120	1.0	7.0	214
SMCJ120A	133	147	1.0	120	1.0	7.8	193
SMCJ130	144	176	1.0	130	1.0	6.5	231
SMCJ130A	144	159	1.0	130	1.0	7.2	209
SMCJ150	167	204	1.0	150	1.0	5.6	268
SMCJ150A	167	185	1.0	150	1.0	6.2	243
SMCJ160	178	218	1.0	160	1.0	5.2	287
SMCJ160A	178	197	1.0	160	1.0	5.8	259
SMCJ170	189	231	1.0	170	1.0	4.90	304
SMCJ170A	189	209	1.0	170	1.0	5.50	275
SMCJ188	209	255	1.0	188	1.0	4.40	344
SMCJ188A	209	231	1.0	188	1.0	4.60	328
SMCJ200A	224	247	1.0	200	1.0	4.6	324
SMCJ220A	246	272	1.0	220	1.0	4.2	356
SMCJ250A	279	309	1.0	250	1.0	3.7	405
SMCJ300A	335	371	1.0	300	1.0	3.1	486
SMCJ350A	391	432	1.0	350	1.0	2.6	567
SMCJ400A	447	494	1.0	400	1.0	2.3	648
SMCJ440A	492	543	1.0	440	1.0	2.1	713

Notes :

(1) Pulse test : tp ≤ 50ms
(2) For bidirectional use suffix "C" or "CA"
(3) For bidirectional types have V_{WM} of 10 V and less , the I_R limit is doubled
(4) For the bidirectional SMCJ5.0CA, the maximum V_{BR} is 7.25V
(5) "SMCJ" will be omitted on marking of the diode
(6) For part without A , the V_{BR} is ± 10% and V_C is ± 5% higher than with A parts.

Transient Voltage Suppressor Diodes

The plastic material carries U/L recognition 94V-0.

Type No.	Breakdown Voltage @ I_T			Working Peak Reverse Voltage	Maximum Reverse Leakage @ V_{WM}	Maximum Peak Pulse Surge Current	Maximum Clamping Voltage @ I_{PPM}
	V_{BR} (V)		I_T	V_{WM}	I_R	I_{PPM}	V_C
Unidirectional	Min.	Max.	(mA)	(V)	(μA)	(A)	(V)
3.0SMCJ Series, 3,000W, Case Type: SMC							
3.0SMCJ11	12.2	15.4	1.0	11	1000	149.2	20.1
3.0SMCJ11A	12.2	14.0	1.0	11	1000	184.8	18.2
3.0SMCJ12	13.3	16.9	1.0	12	1000	136.4	22.0
3.0SMCJ12A	13.3	15.3	1.0	12	1000	150.6	19.9
3.0SMCJ13	14.4	18.2	1.0	13	500	126.0	23.8
3.0SMCJ13A	14.4	16.5	1.0	13	500	139.4	21.5
3.0SMCJ14	15.6	19.8	1.0	14	200	116.2	25.8
3.0SMCJ14A	15.6	17.9	1.0	14	200	129.4	23.2
3.0SMCJ15	16.7	21.1	1.0	15	100	111.6	26.9
3.0SMCJ15A	16.7	19.2	1.0	15	100	123.0	24.4
3.0SMCJ16	17.8	22.6	1.0	16	50	104.2	28.8
3.0SMCJ16A	17.8	20.5	1.0	16	50	115.4	26.0
3.0SMCJ17	18.9	23.9	1.0	17	20	98.4	30.5
3.0SMCJ17A	18.9	21.7	1.0	17	20	106.6	27.6
3.0SMCJ18	20.0	25.3	1.0	18	10	93.2	32.2
3.0SMCJ18A	20.0	23.3	1.0	18	10	102.8	29.2
3.0SMCJ20	22.2	28.1	1.0	20	10	83.8	35.8
3.0SMCJ20A	22.2	25.5	1.0	20	10	92.6	32.4
3.0SMCJ22	24.4	30.9	1.0	22	5	76.2	39.4
3.0SMCJ22A	24.4	28.0	1.0	22	5	84.4	35.5
3.0SMCJ24	26.7	33.8	1.0	24	5	69.8	43.0
3.0SMCJ24A	26.7	30.7	1.0	24	5	77.2	38.9
3.0SMCJ26	28.9	36.6	1.0	26	5	64.4	46.6
3.0SMCJ26A	28.9	33.2	1.0	26	5	71.2	42.1
3.0SMCJ28	31.1	39.4	1.0	28	5	60.0	50.0
3.0SMCJ28A	31.1	35.8	1.0	28	5	66.0	45.4
3.0SMCJ30	33.3	42.2	1.0	30	5	56.0	53.5
3.0SMCJ30A	33.3	38.3	1.0	30	5	62.0	48.4
3.0SMCJ33	36.7	46.5	1.0	33	5	50.4	59.0
3.0SMCJ33A	36.7	42.2	1.0	33	5	56.2	53.3
3.0SMCJ36	40.0	50.7	1.0	36	5	46.6	64.3
3.0SMCJ36A	40.0	46.0	1.0	36	5	51.6	58.1
3.0SMCJ40	44.4	56.3	1.0	40	5	42.0	71.4
3.0SMCJ40A	44.4	51.1	1.0	40	5	46.4	64.5
3.0SMCJ43	47.8	60.5	1.0	43	5	39.2	76.7
3.0SMCJ43A	47.8	54.9	1.0	43	5	43.2	69.4
3.0SMCJ45	50.0	63.3	1.0	45	5	37.4	80.3
3.0SMCJ45A	50.0	57.5	1.0	45	5	41.2	72.7
3.0SMCJ48	53.3	67.5	1.0	48	5	35.0	85.5
3.0SMCJ48A	53.3	61.3	1.0	48	5	38.8	77.4
3.0SMCJ51	56.7	71.8	1.0	51	5	37.0	91.1
3.0SMCJ51A	56.7	65.2	1.0	51	5	36.4	82.4
3.0SMCJ54	60.0	76.0	1.0	54	5	31.2	96.3
3.0SMCJ54A	60.0	69.0	1.0	54	5	34.4	87.1



Transient Voltage Suppressor Diodes

The plastic material carries U/L recognition 94V-0.

Type No.	Breakdown Voltage @ I_T			Working Peak Reverse Voltage	Maximum Reverse Leakage @ V_{WM}	Maximum Peak Pulse Surge Current	Maximum Clamping Voltage @ I_{PPM}
	V_{BR} (V)		I_T	V_{WM}	I_R	I_{PPM}	V_C
Unidirectional	Min.	Max.	(mA)	(V)	(μA)	(A)	(V)
3.0SMCJ Series, 3,000W, Case Type: SMC							
3.0SMCJ58	64.4	81.6	1.0	58	5	39.2	103
3.0SMCJ58A	64.4	74.1	1.0	58	5	32.0	93.6
3.0SMCJ60	66.7	84.5	1.0	60	5	28.0	107
3.0SMCJ60A	66.7	76.7	1.0	60	5	31.0	96
3.0SMCJ64	71.1	90.1	1.0	64	5	26.4	114
3.0SMCJ64A	71.1	81.8	1.0	64	5	29.2	103
3.0SMCJ70	77.8	98.6	1.0	70	5	24.0	125
3.0SMCJ70A	77.8	89.5	1.0	70	5	26.6	113
3.0SMCJ75	83.3	105.7	1.0	75	5	22.4	134
3.0SMCJ75A	83.3	95.8	1.0	75	5	24.8	121
3.0SMCJ78	86.7	109.8	1.0	78	5	21.6	139
3.0SMCJ78A	86.7	99.7	1.0	78	5	22.8	126
3.0SMCJ85	94.4	119.2	1.0	85	5	19.8	151
3.0SMCJ85A	94.4	108.2	1.0	85	5	20.8	137
3.0SMCJ90	100	126.5	1.0	90	5	18.8	160
3.0SMCJ90A	100	115.5	1.0	90	5	20.6	146
3.0SMCJ100	111	141.0	1.0	100	5	16.6	179
3.0SMCJ100A	111	128.0	1.0	100	5	18.6	162
3.0SMCJ110	122	154.5	1.0	110	5	15.4	196
3.0SMCJ110A	122	140.5	1.0	110	5	16.8	177
3.0SMCJ120	133	169.0	1.0	120	5	14.0	214
3.0SMCJ120A	133	153.0	1.0	120	5	15.6	193
3.0SMCJ130	144	182.5	1.0	130	5	13.0	231
3.0SMCJ130A	144	165.5	1.0	130	5	14.4	209
3.0SMCJ150	167	211.5	1.0	150	5	11.2	268
3.0SMCJ150A	167	192.5	1.0	150	5	12.4	243
3.0SMCJ160	178	226.0	1.0	160	5	10.4	287
3.0SMCJ160A	178	205.0	1.0	160	5	11.6	259
3.0SMCJ170	189	239.5	1.0	170	5	9.8	304
3.0SMCJ170A	189	217.5	1.0	170	5	11.0	275
3.0SMCJ180	198	253.8	1.0	180	5	9.3	322
3.0SMCJ180A	198	230.4	1.0	180	5	10.3	292
3.0SMCJ190	209	267.9	1.0	190	5	8.8	340
3.0SMCJ190A	209	243.2	1.0	190	5	9.7	308
3.0SMCJ200	220	282.0	1.0	200	5	8.4	358
3.0SMCJ200A	220	256.0	1.0	200	5	9.3	324
3.0SMCJ210	231	296.1	1.0	210	5	7.8	376
3.0SMCJ210A	231	268.8	1.0	210	5	8.8	340
3.0SMCJ220	242	310.2	1.0	220	5	7.6	394
3.0SMCJ220A	242	281.6	1.0	220	5	8.4	356



Notes:

(1) For bidirectional use suffix "C" or "CA"

(2) "SMCJ" will be omitted on marking of the diode.

Transient Voltage Suppressor Diodes

The plastic material carries U/L recognition 94V-0.

Type No.	Breakdown Voltage @ It (Note 1)			Working Peak Reverse Voltage	Maximum Reverse Leakage @ V_{RWM}	Maximum Reverse Current	Maximum Clamping Voltage @ I_{RSM}	Maximum Temperature Coefficient of V_{BR}
	V_{BR} (V)		It	V_{RWM}	I_R	I_{RSM}	V_{RSM}	
Unidirectional	Min.	Max.	(mA)	(V)	(μA)	(A)	(V)	(% / °C)

3KE Series, 3,000 W, Case Type: DO-201



3KE13	11.7	14.3	10	10.5	1000	158	19.0	0.081
3KE13A	12.4	13.7	10	11.1	1000	164	18.2	0.081
3KE15	13.5	16.5	10	12.1	500	136	22.0	0.084
3KE15A	14.3	15.8	10	12.8	500	142	21.2	0.084
3KE16	14.4	17.6	10	12.9	200	128	23.5	0.086
3KE16A	15.2	16.8	10	13.6	200	134	22.5	0.086
3KE18	16.2	19.8	1.0	14.5	50	113	26.5	0.088
3KE18A	17.1	18.9	1.0	15.3	50	119	25.2	0.088
3KE20	18.0	22.0	1.0	16.2	10	103	29.1	0.090
3KE20A	19.0	21.0	1.0	17.1	10	108	27.7	0.090
3KE22	19.8	24.2	1.0	17.8	5.0	94	31.9	0.092
3KE22A	20.9	23.1	1.0	18.8	5.0	98	30.6	0.092
3KE24	21.6	26.4	1.0	19.4	5.0	86	34.7	0.094
3KE24A	22.8	25.2	1.0	20.5	5.0	90	33.2	0.094
3KE27	24.3	29.7	1.0	21.8	5.0	77	39.1	0.096
3KE27A	25.7	28.4	1.0	23.1	5.0	80	37.5	0.096
3KE30	27.0	33.0	1.0	24.3	5.0	69	43.5	0.097
3KE30A	28.5	31.5	1.0	25.6	5.0	72	41.4	0.097
3KE33	29.7	36.3	1.0	26.8	5.0	63	47.7	0.098
3KE33A	31.4	34.7	1.0	28.2	5.0	66	45.7	0.098
3KE36	32.4	39.6	1.0	29.1	5.0	58	52.0	0.099
3KE36A	34.2	37.8	1.0	30.8	5.0	60	49.9	0.099
3KE39	35.1	42.9	1.0	31.6	5.0	53	56.4	0.100
3KE39A	37.1	41.0	1.0	33.3	5.0	56	53.9	0.100
3KE43	38.7	47.3	1.0	34.8	5.0	48	61.9	0.101
3KE43A	40.9	45.2	1.0	36.8	5.0	51	59.3	0.101
3KE47	42.3	51.7	1.0	38.1	5.0	44	67.8	0.101
3KE47A	44.7	49.4	1.0	40.2	5.0	46	64.8	0.101
3KE51	45.9	56.1	1.0	41.3	5.0	41	73.5	0.102
3KE51A	48.5	53.6	1.0	43.6	5.0	43	70.1	0.102
3KE56	50.4	61.6	1.0	45.4	5.0	37	80.5	0.103
3KE56A	53.2	58.8	1.0	47.8	5.0	39	77.0	0.103
3KE62	55.8	68.2	1.0	50.2	5.0	34	89.0	0.104
3KE62A	58.9	65.1	1.0	53.0	5.0	35.4	85.0	0.104
3KE68	61.2	74.8	1.0	55.1	5.0	30.6	98.0	0.104
3KE68A	64.6	71.4	1.0	58.1	5.0	32.6	92.0	0.104
3KE75	67.5	82.5	1.0	60.7	5.0	27.8	108	0.105
3KE75A	71.3	78.8	1.0	64.1	5.0	29.2	103	0.105
3KE82	73.8	90.2	1.0	66.4	5.0	25.4	118	0.105
3KE82A	77.9	86.1	1.0	70.1	5.0	26.6	113	0.105
3KE91	81.9	100	1.0	73.7	5.0	22.8	131	0.106

Transient Voltage Suppressor Diodes

The plastic material carries U/L recognition 94V-0.

Type No.	Breakdown Voltage @ It (Note 1)			Working Peak Reverse Voltage	Maximum Reverse Leakage @ V_{RWM}	Maximum Reverse Current	Maximum Clamping Voltage @ I_{RSM}	Maximum Temperature Coefficient of V_{BR}
	V_{BR} (V)		It	V_{RWM}	I_R	I_{RSM}	V_{RSM}	
Unidirectional	Min.	Max.	(mA)	(V)	(μA)	(A)	(V)	(% / °C)

3KE Series, 3,000 W, Case Type: DO-201



3KE91A	86.5	95.5	1.0	77.8	5.0	24.0	125	0.106
3KE100	90.0	110	1.0	81.0	5.0	20.8	144	0.106
3KE100A	95.0	105	1.0	85.5	5.0	22.0	137	0.106
3KE110	99.0	121	1.0	89.2	5.0	19.0	158	0.107
3KE110A	105	116	1.0	94.0	5.0	19.8	152	0.107
3KE120	108	132	1.0	97.2	5.0	17.4	173	0.107
3KE120A	114	126	1.0	102	5.0	18.2	165	0.107
3KE130	117	143	1.0	105	5.0	16.0	187	0.107
3KE130A	124	137	1.0	111	5.0	16.8	179	0.107
3KE150	135	165	1.0	121	5.0	14.0	215	0.108
3KE150A	143	158	1.0	128	5.0	14.4	207	0.108
3KE160	144	176	1.0	130	5.0	13.0	230	0.108
3KE160A	152	168	1.0	136	5.0	13.6	219	0.108
3KE170	153	187	1.0	138	5.0	12.4	244	0.108
3KE170A	162	179	1.0	145	5.0	12.8	234	0.108
3KE180	162	198	1.0	146	5.0	11.6	258	0.108
3KE180A	171	189	1.0	154	5.0	12.2	246	0.108
3KE200	180	220	1.0	162	5.0	10.4	287	0.108
3KE200A	190	210	1.0	171	5.0	11.0	274	0.108
3KE220	198	242	1.0	175	5.0	8.6	344	0.108
3KE220A	209	231	1.0	185	5.0	9.2	328	0.108
3KE250	225	275	1.0	202	5.0	10	360	0.110
3KE250A	237	263	1.0	214	5.0	10	344	0.110
3KE300	270	330	1.0	243	5.0	10	430	0.110
3KE300A	285	315	1.0	256	5.0	10	414	0.110
3KE350	315	385	1.0	284	5.0	8.0	504	0.110
3KE350A	332	368	1.0	300	5.0	8.0	482	0.110
3KE400	360	440	1.0	324	5.0	8.0	574	0.110
3KE400A	380	420	1.0	342	5.0	8.0	548	0.110
3KE440	396	484	1.0	356	5.0	4.8	631	0.110
3KE440A	418	462	1.0	376	5.0	5.0	602	0.110

Notes:

(1) V_{BR} measured after It applied for 300 μs., It = square wave pulse or equivalent

(2) V_F = 5.0 Vmax., I_F = 100 A per 1/2 square or equivalent sine wave
PW = 8.3 ms, duty cycle = 4 pulses per minute maximum

(3) For bidirectional use suffix "C" or "CA"

(4) For bidirectional types having V_R of 20 V and under, the I_R limit is doubled

Transient Voltage Suppressor Diodes

The plastic material carries U/L recognition 94V-0.

Type No.	Breakdown Voltage @ I_T (Note 1)			Reverse Stand off Voltage	Maximum Reverse Leakage @ V_{RM}	Maximum Peak Pulse Current (Note2)	Maximum Clamping Voltage @ I_{PPM}	Maximum Temperature Coefficient of V_{BR}
	V_{BR} (V)		I_T	V_{RM}	I_R	I_{PPM}	V_C	
Unidirectional	Min.	Max.	(mA)	(V)	(μA)	(A)	(V)	(%/°C)

5KP Series, 5,000W, Case Type: D6



5KP5.0	6.40	7.30	50	5.0	5000	520	9.60	0.057
5KP5.0A	6.40	7.00	50	5.0	5000	543	9.20	0.057
5KP6.0	6.67	8.15	50	6.0	5000	439	11.4	0.061
5KP6.0A	6.67	7.37	50	6.0	5000	485	10.3	0.061
5KP6.5	7.22	8.82	50	6.5	2000	407	12.3	0.065
5KP6.5A	7.22	7.98	50	6.5	2000	447	11.2	0.065
5KP7.0	7.78	9.51	5.0	7.0	1000	378	13.3	0.068
5KP7.0A	7.78	8.60	5.0	7.0	1000	417	12.0	0.068
5KP7.5	8.33	10.2	5.0	7.5	250	350	14.3	0.073
5KP7.5A	8.33	9.21	5.0	7.5	250	388	12.9	0.073
5KP8.0	8.89	10.9	5.0	8.0	150	333	15.0	0.075
5KP8.0A	8.89	9.83	5.0	8.0	150	367	13.6	0.075
5KP8.5	9.44	11.5	5.0	8.5	50	314	15.9	0.078
5KP8.5A	9.44	10.4	5.0	8.5	50	347	14.4	0.078
5KP9.0	10.0	12.2	5.0	9.0	20	295	16.9	0.081
5KP9.0A	10.0	11.1	5.0	9.0	20	325	15.4	0.081
5KP10	11.1	13.6	5.0	10	15	266	18.8	0.084
5KP10A	11.1	12.3	5.0	10	15	294	17.0	0.084
5KP11	12.2	14.9	5.0	11	10	249	20.1	0.086
5KP11A	12.2	13.5	5.0	11	10	274	18.2	0.086
5KP12	13.3	16.3	5.0	12	10	227	22.0	0.088
5KP12A	13.3	14.7	5.0	12	10	251	19.9	0.088
5KP13	14.4	17.6	5.0	13	10	210	23.8	0.090
5KP13A	14.4	15.9	5.0	13	10	232	21.5	0.090
5KP14	15.6	19.1	5.0	14	10	194	25.8	0.092
5KP14A	15.6	17.2	5.0	14	10	215	23.2	0.092
5KP15	16.7	20.4	5.0	15	10	188	26.9	0.094
5KP15A	16.7	18.5	5.0	15	10	206	24.4	0.094
5KP16	17.8	21.8	5.0	16	10	176	28.8	0.096
5KP16A	17.8	19.7	5.0	16	10	192	26.0	0.096
5KP17	18.9	23.1	5.0	17	10	164	30.5	0.097
5KP17A	18.9	20.9	5.0	17	10	181	27.6	0.097
5KP18	20.0	24.4	5.0	18	10	155	32.2	0.098
5KP18A	20.0	22.1	5.0	18	10	172	29.2	0.098
5KP20	22.2	27.1	5.0	20	10	139	35.8	0.099
5KP20A	22.2	24.5	5.0	20	10	154	32.4	0.099
5KP22	24.4	29.8	5.0	22	10	127	39.4	0.100
5KP22A	24.4	26.9	5.0	22	10	141	35.5	0.100
5KP24	26.7	32.6	5.0	24	10	116	43.0	0.101
5KP24A	26.7	29.5	5.0	24	10	128	38.9	0.101
5KP26	28.9	35.3	5.0	26	10	107	46.6	0.101
5KP26A	28.9	31.9	5.0	26	10	119	42.1	0.101
5KP28	31.1	38.0	5.0	28	10	99	50.1	0.102
5KP28A	31.1	34.4	5.0	28	10	110	45.4	0.102
5KP30	33.3	40.7	5.0	30	10	93	53.5	0.103
5KP30A	33.3	36.8	5.0	30	10	103	48.4	0.103
5KP33	36.7	44.9	5.0	33	10	85	59.0	0.104
5KP33A	36.7	40.6	5.0	33	10	94	53.3	0.104

Transient Voltage Suppressor Diodes

The plastic material carries U/L recognition 94V-0.

Type No.	Breakdown Voltage @ I_T (Note 1)			Reverse Stand off Voltage	Maximum Reverse Leakage @ V_{RM}	Maximum Peak Pulse Current (Note2)	Maximum Clamping Voltage @ I_{PPM}	Maximum Temperature Coefficient of V_{BR}
	V_{BR} (V)		I_T	V_{RM}	I_R	I_{PPM}	V_C	
Unidirectional	Min.	Max.	(mA)	(V)	(μA)	(A)	(V)	(%/°C)

5KP Series, 5,000W, Case Type: D6



5KP36	40.0	48.9	5.0	36	10	78	64.3	0.104
5KP36A	40.0	44.2	5.0	36	10	86	58.1	0.104
5KP40	44.4	54.3	5.0	40	10	70	71.4	0.105
5KP40A	44.4	49.1	5.0	40	10	78	64.5	0.105
5KP43	47.8	58.4	5.0	43	10	65	76.7	0.105
5KP43A	47.8	52.8	5.0	43	10	72	69.4	0.105
5KP45	50.0	61.1	5.0	45	10	62	80.3	0.106
5KP45A	50.0	55.3	5.0	45	10	69	72.7	0.106
5KP48	53.3	65.2	5.0	48	10	58	85.5	0.106
5KP48A	53.3	58.9	5.0	48	10	65	77.4	0.106
5KP51	56.7	69.3	5.0	51	10	55	91.1	0.107
5KP51A	56.7	62.7	5.0	51	10	61	82.4	0.107
5KP54	60.0	73.3	5.0	54	10	52	96.3	0.107
5KP54A	60.0	66.3	5.0	54	10	57	87.1	0.107
5KP56	62.2	76.1	5.0	56	10	50	100	0.107
5KP56A	62.2	68.8	5.0	56	10	55	91	0.107
5KP58	64.4	78.7	5.0	58	10	49	103	0.107
5KP58A	64.4	71.2	5.0	58	10	53	94	0.107
5KP60	66.7	81.5	5.0	60	10	47	107	0.108
5KP60A	66.7	73.7	5.0	60	10	52	97	0.108
5KP64	71.1	96.9	5.0	64	10	44	114	0.108
5KP64A	71.1	78.6	5.0	64	10	49	103	0.108
5KP70	77.6	95.1	5.0	70	10	40	125	0.108
5KP70A	77.6	86.0	5.0	70	10	44	113	0.108
5KP75	83.3	102	5.0	75	10	37	134	0.108
5KP75A	83.3	92.1	5.0	75	10	41	121	0.108
5KP78	86.7	106	5.0	78	10	36	139	0.108
5KP78A	86.7	95.8	5.0	78	10	40	126	0.108
5KP85	94.4	115	5.0	85	10	33	151	0.108
5KP85A	94.4	104	5.0	85	10	36	137	0.110
5KP90	100	122	5.0	90	10	31	160	0.110
5KP90A	100	111	5.0	90	10	34	146	0.110
5KP100	111	136	5.0	100	10	28	179	0.110
5KP100A	111	123	5.0	100	10	31	162	0.110
5KP110	122	149	5.0	110	10	26	196	0.112
5KP110A	122	135	5.0	110	10	28	177	0.112
5KP120	133	163	5.0	120	10	24	211	0.112
5KP120A	133	147	5.0	120	10	26	192	0.112
5KP150	167	204	5.0	150	10	19	263	0.112
5KP150A	167	184	5.0	150	10	21	238	0.112
5KP160	178	217	5.0	160	10	18	281	0.114
5KP160A	178	196	5.0	160	10	19	263	0.114
5KP180	200	244	5.0	180	10	16	316	0.114
5KP180A	200	221	5.0	180	10	17	290	0.114

Notes: (1) V_{BR} measured after I_T applied for 300 μs., I_T = square wave pulse or equivalent
(2) For bidirectional use suffix "C" or "CA"
(3) V_F = 3.5 V max. for devices of V_R < 100 V, and V_F = 5 V max. for devices of V_R > 100 V
(4) For bidirectional devices having V_R of 10 V and under, the I_R limit is doubled

Transient Voltage Suppressor Diodes

The plastic material carries U/L recognition 94V-0.

Type No.	Breakdown Voltage @ I_R (Note 1)			Stand - off Reverse Voltage	Maximum Reverse Leakage @ V_{RM}	Maximum Reverse Current	Maximum Clamping Voltage @ I_{RSM}	Maximum Temperature Coefficient
	V_{BR} (V)		I_R	V_{RM}	I_R	I_{RSM}	V_{RSM}	αT (Note 2)
Unidirectional	Min.	Max.	(mA)	(V)	(μA)	(A)	(V)	(10^{-4} / °C)

BZW50 Series, 5,000W, Case Type: D6



BZW50-10	11.1	13.6	1.0	10	5.0	266	18.8	7.8
BZW50-12	13.3	16.3	1.0	12	5.0	227	22.0	8.4
BZW50-15	16.6	20.4	1.0	15	5.0	186	26.9	8.8
BZW50-18	20.0	24.4	1.0	18	5.0	155	32.2	9.2
BZW50-22	24.4	29.8	1.0	22	5.0	127	39.4	9.6
BZW50-27	30.0	36.6	1.0	27	5.0	103	48.3	.9.8
BZW50-33	36.6	44.7	1.0	33	5.0	85	59.0	10
BZW50-39	43.3	53.0	1.0	39	5.0	72	69.4	10.1
BZW50-47	52.0	63.6	1.0	47	5.0	60.1	83.2	10.3
BZW50-56	62.2	76.0	1.0	56	5.0	50	99.6	10.4
BZW50-68	75.6	92.4	1.0	68	5.0	41	121	10.5
BZW50-82	91.0	111	1.0	82	5.0	34	145	10.6
BZW50-100	111	136	1.0	100	5.0	28	179	10.7
BZW50-120	133	163	1.0	120	5.0	23	215	10.8
BZW50-150	166	204	1.0	150	5.0	19	269	10.8
BZW50-180	200	244	1.0	180	5.0	16	322	10.8

Notes:

(1) Pulse test : tp < 50 ms

(2) $\Delta V_{BR} = \alpha T * V_{BR}$ (25 °C)

(3) For bidirectional use suffix "B" (Axial Lead)

Transient Voltage Suppressor Diodes

The plastic material carries U/L recognition 94V-0.

Type No.	Breakdown Voltage @ I_T (Note 1)			Reverse Stand off Voltage	Maximum Reverse Leakage @ V_{RM}	Maximum Peak Pulse Current (Note2)	Maximum Clamping Voltage @ I_{PPM}	Maximum Temperature Coefficient of V_{BR}
	V_{BR} (V)		I_T	V_{RM}	I_R	I_{PPM}	V_C	
Unidirectional	Min.	Max.	(mA)	(V)	(μA)	(A)	(V)	(%/°C)

S5KP Series, 5,000W, Case Type: D^2PAK



S5KP5.0	6.40	7.30	50	5.0	5000	520	9.60	0.057
S5KP5.0A	6.40	7.00	50	5.0	5000	543	9.20	0.057
S5KP6.0	6.67	8.15	50	6.0	5000	439	11.4	0.061
S5KP6.0A	6.67	7.37	50	6.0	5000	485	10.3	0.061
S5KP6.5	7.22	8.82	50	6.5	2000	407	12.3	0.065
S5KP6.5A	7.22	7.98	50	6.5	2000	447	11.2	0.065
S5KP7.0	7.78	9.51	5.0	7.0	1000	378	13.3	0.068
S5KP7.0A	7.78	8.60	5.0	7.0	1000	417	12.0	0.068
S5KP7.5	8.33	10.2	5.0	7.5	250	350	14.3	0.073
S5KP7.5A	8.33	9.21	5.0	7.5	250	388	12.9	0.073
S5KP8.0	8.89	10.9	5.0	8.0	150	333	15.0	0.075
S5KP8.0A	8.89	9.83	5.0	8.0	150	367	13.6	0.075
S5KP8.5	9.44	11.5	5.0	8.5	50	314	15.9	0.078
S5KP8.5A	9.44	10.4	5.0	8.5	50	347	14.4	0.078
S5KP9.0	10.0	12.2	5.0	9.0	20	295	16.9	0.081
S5KP9.0A	10.0	11.1	5.0	9.0	20	325	15.4	0.081
S5KP10	11.1	13.6	5.0	10	15	266	18.8	0.084
S5KP10A	11.1	12.3	5.0	10	15	294	17.0	0.084
S5KP11	12.2	14.9	5.0	11	10	249	20.1	0.086
S5KP11A	12.2	13.5	5.0	11	10	274	18.2	0.086
S5KP12	13.3	16.3	5.0	12	10	227	22.0	0.088
S5KP12A	13.3	14.7	5.0	12	10	251	19.9	0.088
S5KP13	14.4	17.6	5.0	13	10	210	23.8	0.090
S5KP13A	14.4	15.9	5.0	13	10	232	21.5	0.090
S5KP14	15.6	19.1	5.0	14	10	194	25.8	0.092
S5KP14A	15.6	17.2	5.0	14	10	215	23.2	0.092
S5KP15	16.7	20.4	5.0	15	10	188	26.9	0.094
S5KP15A	16.7	18.5	5.0	15	10	206	24.4	0.094
S5KP16	17.8	21.8	5.0	16	10	176	28.8	0.096
S5KP16A	17.8	19.7	5.0	16	10	192	26.0	0.096
S5KP17	18.9	23.1	5.0	17	10	164	30.5	0.097
S5KP17A	18.9	20.9	5.0	17	10	181	27.6	0.097
S5KP18	20.0	24.4	5.0	18	10	155	32.2	0.098
S5KP18A	20.0	22.1	5.0	18	10	172	29.2	0.098
S5KP20	22.2	27.1	5.0	20	10	139	35.8	0.099
S5KP20A	22.2	24.5	5.0	20	10	154	32.4	0.099
S5KP22	24.4	29.8	5.0	22	10	127	39.4	0.100
S5KP22A	24.4	26.9	5.0	22	10	141	35.5	0.100
S5KP24	26.7	32.6	5.0	24	10	116	43.0	0.101
S5KP24A	26.7	29.5	5.0	24	10	128	38.9	0.101
S5KP26	28.9	35.3	5.0	26	10	107	46.6	0.101
S5KP26A	28.9	31.9	5.0	26	10	119	42.1	0.101
S5KP28	31.1	38.0	5.0	28	10	99	50.1	0.102
S5KP28A	31.1	34.4	5.0	28	10	110	45.4	0.102
S5KP30	33.3	40.7	5.0	30	10	93	53.5	0.103
S5KP30A	33.3	36.8	5.0	30	10	103	48.4	0.103
S5KP33	36.7	44.9	5.0	33	10	85	59.0	0.104
S5KP33A	36.7	40.6	5.0	33	10	94	53.3	0.104
S5KP36	40.0	48.9	5.0	36	10	78	64.3	0.104
S5KP36A	40.0	44.2	5.0	36	10	86	58.1	0.104
S5KP40	44.4	54.3	5.0	40	10	70	71.4	0.105
S5KP40A	44.4	49.1	5.0	40	10	78	64.5	0.105

Transient Voltage Suppressor Diodes

The plastic material carries U/L recognition 94V-0.

Type No.	Breakdown Voltage @ I_T (Note 1)			Reverse Stand off Voltage	Maximum Reverse Leakage @ V_{RM}	Maximum Peak Pulse Current (Note2)	Maximum Clamping Voltage @ I_{PPM}	Maximum Temperature Coefficient of V_{BR}
	V_{BR} (V)		I_T	V_{RM}	I_R	I_{PPM}	V_C	
Unidirectional	Min.	Max.	(mA)	(V)	(μA)	(A)	(V)	(%/°C)

S5KP Series, 5,000W, Case Type: D^2PAK



S5KP43	47.8	58.4	5.0	43	10	65	76.7	0.105
S5KP43A	47.8	52.8	5.0	43	10	72	69.4	0.105
S5KP45	50.0	61.1	5.0	45	10	62	80.3	0.106
S5KP45A	50.0	55.3	5.0	45	10	69	72.7	0.106
S5KP48	53.3	65.2	5.0	48	10	58	85.5	0.106
S5KP48A	53.3	58.9	5.0	48	10	65	77.4	0.106
S5KP51	56.7	69.3	5.0	51	10	55	91.1	0.107
S5KP51A	56.7	62.7	5.0	51	10	61	82.4	0.107
S5KP54	60.0	73.3	5.0	54	10	52	96.3	0.107
S5KP54A	60.0	66.3	5.0	54	10	57	87.1	0.107
S5KP56	62.2	76.1	5.0	56	10	50	100	0.107
S5KP56A	62.2	68.8	5.0	56	10	55	91	0.107
S5KP58	64.4	78.7	5.0	58	10	49	103	0.107
S5KP58A	64.4	71.2	5.0	58	10	53	94	0.107
S5KP60	66.7	81.5	5.0	60	10	47	107	0.108
S5KP60A	66.7	73.7	5.0	60	10	52	97	0.108
S5KP64	71.1	96.9	5.0	64	10	44	114	0.108
S5KP64A	71.1	78.6	5.0	64	10	49	103	0.108
S5KP70	77.6	95.1	5.0	70	10	40	125	0.108
S5KP70A	77.6	86.0	5.0	70	10	44	113	0.108
S5KP75	83.3	102	5.0	75	10	37	134	0.108
S5KP75A	83.3	92.1	5.0	75	10	41	121	0.108
S5KP78	86.7	106	5.0	78	10	36	139	0.108
S5KP78A	86.7	95.8	5.0	78	10	40	126	0.108
S5KP85	94.4	115	5.0	85	10	33	151	0.108
S5KP85A	94.4	104	5.0	85	10	36	137	0.110
S5KP90	100	122	5.0	90	10	31	160	0.110
S5KP90A	100	111	5.0	90	10	34	146	0.110
S5KP100	111	136	5.0	100	10	28	179	0.110
S5KP100A	111	123	5.0	100	10	31	162	0.110
S5KP110	122	149	5.0	110	10	26	196	0.112
S5KP110A	122	135	5.0	110	10	28	177	0.112
S5KP120	133	163	5.0	120	10	24	211	0.112
S5KP120A	133	147	5.0	120	10	26	192	0.112
S5KP150	167	204	5.0	150	10	19	263	0.112
S5KP150A	167	184	5.0	150	10	21	238	0.112
S5KP160	178	217	5.0	160	10	18	281	0.114
S5KP160A	178	196	5.0	160	10	19	263	0.114
S5KP170	189	231	5.0	170	10	17	298	0.114
S5KP170A	189	209	5.0	170	10	18	278	0.114
S5KP180	200	244	5.0	180	10	16	316	0.114
S5KP180A	200	221	5.0	180	10	17	290	0.114

Notes:

(1) V_{BR} measured after I_T applied for 300 μs., I_T = square wave pulse or equivalent

(2) For bidirectional use suffix "C" or "CA"

(3) V_F = 3.5 V max. for devices of V_R < 100 V, and V_F = 5 V max. for devices of V_R > 100 V

(4) For bidirectional devices having V_R of 10 V and under, the I_R limit is doubled

(5) "S KP " will be omitted on marking of the diode

Transient Voltage Suppressor Diodes

The plastic material carries U/L recognition 94V-0.

Type No.	Breakdown Voltage @ I_T			Reverse Stand off Voltage	Maximum Reverse Leakage @ V_{RWM}	Maximum Reverse Leakage @ V_{RM}	Maximum Peak Pulse Current at 10/1000ms	Maximum Clamping Voltage @ I_{PPM}
	V_{BR} (V)		I_T	V_{RWM}	I_R	I_R (T_C=175°C)	I_{PPM}	V_C
Unidirectional	Min.	Max.	(mA)	(V)	(mA)	(mA)	(A)	(V)

SM8S Series, 6,600W, Case Type: D²PAK



SM8S10	11.1	13.6	5.0	10	15	250	351	18.8
SM8S10A	11.1	12.3	5.0	10	15	250	388	17.0
SM8S11	12.2	14.9	5.0	11	10	150	328	20.1
SM8S11A	12.2	13.5	5.0	11	10	150	363	18.2
SM8S12	13.3	16.3	5.0	12	10	150	300	22.0
SM8S12A	13.3	14.7	5.0	12	10	150	332	19.9
SM8S13	14.4	17.6	5.0	13	10	150	277	23.8
SM8S13A	14.4	15.9	5.0	13	10	150	307	21.5
SM8S14	15.6	19.1	5.0	14	10	150	256	25.8
SM8S14A	15.6	17.2	5.0	14	10	150	284	23.2
SM8S15	16.7	20.4	5.0	15	10	150	245	26.9
SM8S15A	16.7	18.5	5.0	15	10	150	270	24.4
SM8S16	17.8	21.8	5.0	16	10	150	229	28.8
SM8S16A	17.8	19.7	5.0	16	10	150	254	26.0
SM8S17	18.9	23.1	5.0	17	10	150	216	30.5
SM8S17A	18.9	20.9	5.0	17	10	150	239	27.6
SM8S18	20.0	24.4	5.0	18	10	150	205	32.2
SM8S18A	20.0	22.1	5.0	18	10	150	226	29.2
SM8S20	22.2	27.1	5.0	20	10	150	184	35.8
SM8S20A	22.2	24.5	5.0	20	10	150	204	32.4
SM8S22	24.4	29.8	5.0	22	10	150	168	39.4
SM8S22A	24.4	26.9	5.0	22	10	150	168	35.5
SM8S24	26.7	32.6	5.0	24	10	150	153	43.0
SM8S24A	26.7	29.5	5.0	24	10	150	170	38.9
SM8S26	28.9	35.3	5.0	26	10	150	142	46.6
SM8S26A	28.9	31.9	5.0	26	10	150	157	42.1
SM8S28	31.1	38.0	5.0	28	10	150	132	50.1
SM8S28A	31.1	34.4	5.0	28	10	150	145	45.4
SM8S30	33.3	40.7	5.0	30	10	150	123	53.5
SM8S30A	33.3	36.8	5.0	30	10	150	136	48.4
SM8S33	36.7	44.9	5.0	33	10	150	112	59.0
SM8S33A	36.7	40.6	5.0	33	10	150	124	53.3
SM8S36	40.0	48.9	5.0	36	10	150	103	64.3
SM8S36A	40.0	44.2	5.0	36	10	150	114	58.1
SM8S40	44.4	54.3	5.0	40	10	150	92	71.4
SM8S40A	44.4	49.1	5.0	40	10	150	102	64.5
SM8S43	47.8	58.4	5.0	43	10	150	86	76.7
SM8S43A	47.8	52.8	5.0	43	10	150	95	69.4

Notes:

(1) For all types maximum V_F = 1.8V at I_F = 100A measured on 8.3ms single half sine-wave or equivalent square wave, duty cycle = 4 pulses per minute maximum

(2) "SM S " will be omitted on marking of the diode.

(3) For bidirectional use suffix "C" or "CA"

Transient Voltage Suppressor Diodes

The plastic material carries U/L recognition 94V-0.

TYPE	Breakdown Voltage @ I_T (Note 1)			Reverse Stand off Voltage	Maximum Reverse Leakage @ V_{RM}	Maximum Peak Pulse Current (Note2)	Maximum Clamping Voltage @ I_{PPM}	Maximum Temperature Coefficient of V_{BR}
	V_{BR} (V)		I_T	V_{RM}	I_R	I_{PPM}	V_C	
	Min.	Max.	(mA)	(V)	(μA)	(A)	(V)	(%/°C)

10KP Series, 10,000 W, Case Type: D6



10KP11	12.2	14.9	5	11	10000	498	20.1	0.086
10KP11A	12.2	13.5	5	11	10000	549	18.2	0.086
10KP12	13.3	16.3	5	12	10000	455	22.0	0.088
10KP12A	13.3	14.7	5	12	10000	503	19.9	0.088
10KP13	14.4	17.6	5	13	4000	420	23.8	0.090
10KP13A	14.4	15.9	5	13	4000	465	21.5	0.090
10KP14	15.6	19.1	5	14	2000	388	25.8	0.092
10KP14A	15.6	17.2	5	14	2000	431	23.2	0.092
10KP15	16.7	20.4	5	15	500	372	26.9	0.094
10KP15A	16.7	18.5	5	15	500	410	24.4	0.094
10KP16	17.8	21.8	5	16	300	347	28.8	0.096
10KP16A	17.8	19.7	5	16	300	385	26.0	0.096
10KP17	18.9	23.1	5	17	100	328	30.5	0.097
10KP17A	18.9	20.9	5	17	100	362	27.6	0.097
10KP18	20.0	24.4	5	18	40	311	32.2	0.098
10KP18A	20.0	22.1	5	18	40	342	29.2	0.098
10KP20	22.2	27.1	5	20	30	279	35.8	0.099
10KP20A	22.2	24.5	5	20	30	309	32.4	0.099
10KP22	24.4	29.8	5	22	20	254	39.4	0.100
10KP22A	24.4	26.9	5	22	20	282	35.5	0.100
10KP24	26.7	32.6	5	24	20	233	43.0	0.101
10KP24A	26.7	29.5	5	24	20	257	38.9	0.101
10KP26	28.9	35.3	5	26	20	215	46.6	0.101
10KP26A	28.9	31.9	5	26	20	238	42.1	0.101
10KP28	31.1	38.0	5	28	20	200	50.1	0.102
10KP28A	31.1	34.4	5	28	20	220	45.4	0.102
10KP30	33.3	40.7	5	30	20	187	53.5	0.103
10KP30A	33.3	36.8	5	30	20	207	48.4	0.103
10KP33	36.7	44.9	5	33	20	169	59.0	0.104
10KP33A	36.7	40.6	5	33	20	188	53.3	0.104
10KP36	40.0	48.9	5	36	20	156	64.3	0.104
10KP36A	40.0	44.2	5	36	20	172	58.1	0.104
10KP40	44.4	54.3	5	40	20	140	71.4	0.105
10KP40A	44.4	49.1	5	40	20	155	64.5	0.105
10KP43	47.8	58.4	5	43	20	130	76.7	0.105
10KP43A	47.8	52.8	5	43	20	144	69.4	0.105
10KP45	50.0	61.1	5	45	20	125	80.3	0.106
10KP45A	50.0	55.3	5	45	20	138	72.7	0.106
10KP48	53.3	65.2	5	48	20	117	85.5	0.106
10KP48A	53.3	58.9	5	48	20	129	77.4	0.106
10KP51	56.7	69.3	5	51	20	110	91.1	0.107
10KP51A	56.7	62.7	5	51	20	121	82.4	0.107

Transient Voltage Suppressor Diodes

The plastic material carries U/L recognition 94V-0.

TYPE	Breakdown Voltage @ I_T (Note 1)			Reverse Stand off Voltage	Maximum Reverse Leakage @ V_{RM}	Maximum Peak Pulse Current (Note2)	Maximum Clamping Voltage @ I_{PPM}	Maximum Temperature Coefficient of V_{BR}
	V_{BR} (V)		I_T	V_{RM}	I_R	I_{PPM}	V_C	
	Min.	Max.	(mA)	(V)	(μA)	(A)	(V)	(%/°C)
10KP Series, 10,000 W, Case Type: D6								
10KP54	60.0	73.3	5	54	20	104	96.3	0.107
10KP54A	60.0	66.3	5	54	20	115	87.1	0.107
10KP56	62.2	76.1	5	56	20	100	100	0.107
10KP56A	62.2	68.8	5	56	20	110	91	0.107
10KP58	64.4	78.7	5	58	20	97	103	0.107
10KP58A	64.4	71.2	5	58	20	106	94	0.107
10KP60	66.7	81.5	5	60	20	93	107	0.108
10KP60A	66.7	73.7	5	60	20	103	97	0.108
10KP64	71.1	96.9	5	64	20	88	114	0.108
10KP64A	71.1	78.6	5	64	20	97	103	0.108
10KP70	77.6	95.1	5	70	20	80	125	0.108
10KP70A	77.6	86.0	5	70	20	88	113	0.108
10KP75	83.3	102	5	75	20	75	134	0.108
10KP75A	83.3	92.1	5	75	20	83	121	0.108
10KP78	86.7	106	5	78	20	72	139	0.108
10KP78A	86.7	95.8	5	78	20	79	126	0.108
10KP85	94.4	115	5	85	20	66	151	0.108
10KP85A	94.4	104	5	85	20	73	137	0.110
10KP90	100	122	5	90	20	63	160	0.110
10KP90A	100	111	5	90	20	68	146	0.110
10KP100	111	136	5	100	20	56	179	0.110
10KP100A	111	123	5	100	20	62	162	0.110
10KP110	122	149	5	110	20	51	196	0.112
10KP110A	122	135	5	110	20	56	177	0.112
10KP120	133	163	5	120	20	47	211	0.112
10KP120A	133	147	5	120	20	52	192	0.112
10KP150	167	204	5	150	20	38	263	0.112
10KP150A	167	184	5	150	20	42	238	0.112
10KP160	178	217	5	160	20	36	281	0.114
10KP160A	178	196	5	160	20	38	263	0.114
10KP170	189	231	5	170	20	34	298	0.114
10KP170A	189	209	5	170	20	36	274	0.114
10KP180	200	244	5	180	20	32	316	0.114
10KP180A	200	221	5	180	20	34	290	0.114



Notes:

(1) V_{BR} measured after I_T applied for 300 μs., I_T = square wave pulse or equivalent.

(2) V_F = 3.5 Volts max. for devices of V_R < 100 V, and V_F = 5 Volts max. for devices of V_R > 100 V.

(3) For Bi-directional devices having V_R of 20 Volts and under the I_R limit is doubled.

Transient Voltage Suppressor Diodes

The plastic material carries U/L recognition 94V-0.

Type No.		Reverse Stand Off Voltage	Breakdown Voltage @ I_T		Maximum Reverse Leakage @ V_R	Maximum Clamping Voltage @ I_{PP}	Maximum Peak Pulse Current	Max. Voltage Temperature Variation of V_{BR}
(Unidirectional)	(Bidirectional)	V_R	V_{BR} (V)	I_T	I_R	V_C	I_{PP}	
		(V)	Min.	(mA)	(μA)	(V)	(A)	(mV/°C)

15KP Series, 15,000 W, Case Type: D6



15KP17	**15KP17C**	17	18.9	50	5,000	32.2	464	19
15KP17A	**15KP17CA**	17	18.9	50	5,000	29.3	512	17
15KP18	**15KP18C**	18	20.0	50	5,000	34.2	439	20
15KP18A	**15KP18CA**	18	20.0	50	5,000	30.9	485	18
15KP20	**15KP20C**	20	22.2	20	1,500	37.9	396	24
15KP20A	**15KP20CA**	20	22.2	20	1,500	34.3	437	21
15KP22	**15KP22C**	22	24.4	10	500	41.1	365	27
15KP22A	**15KP22CA**	22	24.4	10	500	37.1	404	24
15KP24	**15KP24C**	24	26.7	5.0	150	45.0	333	30
15KP24A	**15KP24CA**	24	26.7	5.0	150	40.7	369	27
15KP26	**15KP26C**	26	28.9	5.0	50	48.7	308	32
15KP26A	**15KP26CA**	26	28.9	5.0	50	44.0	341	29
15KP28	**15KP28C**	28	31.1	5.0	25	52.4	286	35
15KP28A	**15KP28CA**	28	31.1	5.0	25	47.5	316	31
15KP30	**15KP30C**	30	33.3	5.0	15	56.2	267	37
15KP30A	**15KP30CA**	30	33.3	5.0	15	50.7	296	33
15KP33	**15KP33C**	33	36.7	5.0	10	60.6	248	42
15KP33A	**15KP33CA**	33	36.7	5.0	10	54.8	274	38
15KP36	**15KP36C**	36	40.0	5.0	10	66.0	227	46
15KP36A	**15KP36CA**	36	40.0	5.0	10	59.7	251	41
15KP40	**15KP40C**	40	44.4	5.0	10	72.8	206	51
15KP40A	**15KP40CA**	40	44.4	5.0	10	65.8	228	46
15KP43	**15KP43C**	43	47.8	5.0	10	77.1	195	55
15KP43A	**15KP43CA**	43	47.8	5.0	10	69.7	215	50
15KP45	**15KP45C**	45	50.0	5.0	10	80.7	186	57
15KP45A	**15KP45CA**	45	50.0	5.0	10	73.0	205	52
15KP48	**15KP48C**	48	53.3	5.0	10	85.9	175	62
15KP48A	**15KP48CA**	48	53.3	5.0	10	77.7	193	56
15KP51	**15KP51C**	51	56.7	5.0	10	91.5	164	66
15KP51A	**15KP51CA**	51	56.7	5.0	10	82.5	181	60
15KP54	**15KP54C**	54	60.0	5.0	10	96.8	155	70
15KP54A	**15KP54CA**	54	60.0	5.0	10	87.5	171	63
15KP58	**15KP58C**	58	64.4	5.0	10	104	144	76
15KP58A	**15KP58CA**	58	64.4	5.0	10	94	160	68
15KP60	**15KP60C**	60	66.7	5.0	10	107	140	78
15KP60A	**15KP60CA**	60	66.7	5.0	10	97.3	154	70
15KP64	**15KP64C**	64	71.1	5.0	10	115	130	84
15KP64A	**15KP64CA**	64	71.1	5.0	10	104	144	76
15KP70	**15KP70C**	70	77.8	5.0	10	126	119	92
15KP70A	**15KP70CA**	70	77.8	5.0	10	114	132	83
15KP75	**15KP75C**	75	83.3	5.0	10	135	111	100
15KP75A	**15KP75CA**	75	83.3	5.0	10	122	123	89

Transient Voltage Suppressor Diodes

The plastic material carries U/L recognition 94V-0.

Type No.		Reverse Stand Off Voltage	Breakdown Voltage @ I_T		Maximum Reverse Leakage @ V_R	Maximum Clamping Voltage @ I_{PP}	Maximum Peak Pulse Current	Max. Voltage Temperature Variation of V_{BR}
(Unidirectional)	(Bidirectional)	V_R	V_{BR} (V)	I_T	I_R	V_C	I_{PP}	
		(V)	Min.	(mA)	(μA)	(V)	(A)	(mV/°C)

15KP Series, 15,000 W, Case Type: D6



15KP78	**15KP78C**	78	86.7	5.0	10	140	107	104
15KP78A	**15KP78CA**	78	86.7	5.0	10	126	119	93
15KP85	**15KP85C**	85	94.4	5.0	10	152	99	113
15KP85A	**15KP85CA**	85	94.4	5.0	10	137	109	102
15KP90	**15KP90C**	90	100	5.0	10	160	94	120
15KP90A	**15KP90CA**	90	100	5.0	10	146	103	110
15KP100	**15KP100C**	100	111	5.0	10	179	84	134
15KP100A	**15KP100CA**	100	111	5.0	10	162	93	123
15KP110	**15KP110C**	110	122	5.0	10	196	77	147
15KP110A	**15KP110CA**	110	122	5.0	10	178	84	133
15KP120	**15KP120C**	120	133	5.0	10	214	70	161
15KP120A	**15KP120CA**	120	133	5.0	10	193	78	146
15KP130	**15KP130C**	130	144	5.0	10	231	65	174
15KP130A	**15KP130CA**	130	144	5.0	10	209	72	158
15KP150	**15KP150C**	150	167	5.0	10	268	56	202
15KP150A	**15KP150CA**	150	167	5.0	10	243	62	184
15KP160	**15KP160C**	160	178	5.0	10	287	52	216
15KP160A	**15KP160CA**	160	178	5.0	10	259	58	196
15KP170	**15KP170C**	170	189	5.0	10	304	49	229
15KP170A	**15KP170CA**	170	189	5.0	10	275	55	208
15KP180	**15KP180C**	180	200	5.0	10	321	47	242
15KP180A	**15KP180CA**	180	200	5.0	10	287	52	220
15KP200	**15KP200C**	200	222	5.0	10	356	42	296
15KP200A	**15KP200CA**	200	222	5.0	10	325	46	274
15KP220	**15KP220C**	220	245	5.0	10	393	38	297
15KP220A	**15KP220CA**	220	245	5.0	10	347	43	273
15KP240	**15KP240C**	240	267	5.0	10	428	35	324
15KP240A	**15KP240CA**	240	267	5.0	10	387	39	300

Note:

Suffix "A" denotes 5% tolerance device , no suffix denotes a 10% tolerance device

Transient Voltage Suppressor Diodes

The plastic material carries U/L recognition 94V-0.

Part Number (Uni-directional)	Part Number (Bi-directional)	Reverse Stand Off Voltage	Breakdown Voltage @ I_T			Maximum Reverse Leakage @ V_R	Maximum Clamping Voltage @ I_{PP}	Maximum Peak Pulse Current	Max. Voltage Temperature Variation of V_{BR}
		V_{WM}	V_{BR} (V)		I_T	I_R	V_C	I_{PP}	
		(V)	Min.	Max.	(mA)	(μA)	(V)	(A)	(mV/°C)
R15KP Series, 15,000 W, Case Type: 5R									
R15KP17	**R15KP17C**	17	18.9	23.1	50	5,000	32.2	464	19
R15KP17A	**R15KP17CA**	17	18.9	20.9	50	5,000	29.3	512	17
R15KP18	**R15KP18C**	18	20.0	24.4	50	5,000	34.2	439	20
R15KP18A	**R15KP18CA**	18	20.0	22.1	50	5,000	30.9	485	18
R15KP20	**R15KP20C**	20	22.2	27.1	20	1,500	37.9	396	24
R15KP20A	**R15KP20CA**	20	22.2	24.5	20	1,500	34.3	437	21
R15KP22	**R15KP22C**	22	24.4	29.8	10	500	41.1	365	27
R15KP22A	**R15KP22CA**	22	24.4	26.9	10	500	37.1	404	24
R15KP24	**R15KP24C**	24	26.7	32.6	5.0	150	45.0	333	30
R15KP24A	**R15KP24CA**	24	26.7	29.5	5.0	150	40.7	369	27
R15KP26	**R15KP26C**	26	28.9	35.3	5.0	50	48.7	308	32
R15KP26A	**R15KP26CA**	26	28.9	31.9	5.0	50	44.0	341	29
R15KP28	**R15KP28C**	28	31.1	38.0	5.0	25	52.4	286	35
R15KP28A	**R15KP28CA**	28	31.1	34.4	5.0	25	47.5	316	31
R15KP30	**R15KP30C**	30	33.3	40.7	5.0	15	56.2	267	37
R15KP30A	**R15KP30CA**	30	33.3	36.8	5.0	15	50.7	296	33
R15KP33	**R15KP33C**	33	36.7	44.9	5.0	10	60.6	248	42
R15KP33A	**R15KP33CA**	33	36.7	40.6	5.0	10	54.8	274	38
R15KP36	**R15KP36C**	36	40.0	48.9	5.0	10	66.0	227	46
R15KP36A	**R15KP36CA**	36	40.0	44.2	5.0	10	59.7	251	41
R15KP40	**R15KP40C**	40	44.4	54.3	5.0	10	72.8	206	51
R15KP40A	**R15KP40CA**	40	44.4	49.1	5.0	10	65.8	228	46
R15KP43	**R15KP43C**	43	47.8	58.4	5.0	10	77.1	195	55
R15KP43A	**R15KP43CA**	43	47.8	52.8	5.0	10	69.7	215	50
R15KP45	**R15KP45C**	45	50.0	61.1	5.0	10	80.7	186	57
R15KP45A	**R15KP45CA**	45	50.0	55.3	5.0	10	73.0	205	52
R15KP48	**R15KP48C**	48	53.3	65.1	5.0	10	85.9	175	62
R15KP48A	**R15KP48CA**	48	53.3	58.9	5.0	10	77.7	193	56
R15KP51	**R15KP51C**	51	56.7	69.3	5.0	10	91.5	164	66
R15KP51A	**R15KP51CA**	51	56.7	62.7	5.0	10	82.5	181	60
R15KP54	**R15KP54C**	54	60.0	73.3	5.0	10	96.8	155	70
R15KP54A	**R15KP54CA**	54	60.0	66.3	5.0	10	87.5	171	63
R15KP58	**R15KP58C**	58	64.4	78.7	5.0	10	104	144	76
R15KP58A	**R15KP58CA**	58	64.4	71.2	5.0	10	94	160	68
R15KP60	**R15KP60C**	60	66.7	81.5	5.0	10	107	140	78
R15KP60A	**R15KP60CA**	60	66.7	73.7	5.0	10	97.3	154	70
R15KP64	**R15KP64C**	64	71.1	86.9	5.0	10	115	130	84
R15KP64A	**R15KP64CA**	64	71.1	78.6	5.0	10	104	144	76
R15KP70	**R15KP70C**	70	77.8	95.1	5.0	10	126	119	92
R15KP70A	**R15KP70CA**	70	77.8	86.0	5.0	10	114	132	83
R15KP75	**R15KP75C**	75	83.3	102	5.0	10	135	111	100
R15KP75A	**R15KP75CA**	75	83.3	92.1	5.0	10	122	123	89



Transient Voltage Suppressor Diodes

The plastic material carries U/L recognition 94V-0.

Part Number (Uni-directional)	Part Number (Bi-directional)	Reverse Stand Off Voltage	Breakdown Voltage @ I_T			Maximum Reverse Leakage @ V_R	Maximum Clamping Voltage @ I_{PP}	Maximum Peak Pulse Current	Max. Voltage Temperature Variation of V_{BR}
		V_{WM}	V_{BR} (V)		I_T	I_R	V_C	I_{PP}	
		(V)	Min.	Max.	(mA)	(μA)	(V)	(A)	(mV/°C)
R15KP Series, 15,000 W, Case Type: 5R									
R15KP78	**R15KP78C**	78	86.7	106	5.0	10	140	107	104
R15KP78A	**R15KP78CA**	78	86.7	95.8	5.0	10	126	119	93
R15KP85	**R15KP85C**	85	94.4	115	5.0	10	152	99	113
R15KP85A	**R15KP85CA**	85	94.4	104	5.0	10	137	109	102
R15KP90	**R15KP90C**	90	100	122	5.0	10	160	94	120
R15KP90A	**R15KP90CA**	90	100	111	5.0	10	146	103	110
R15KP100	**R15KP100C**	100	111	136	5.0	10	179	84	134
R15KP100A	**R15KP100CA**	100	111	123	5.0	10	162	93	123
R15KP110	**R15KP110C**	110	122	149	5.0	10	196	77	147
R15KP110A	**R15KP110CA**	110	122	135	5.0	10	178	84	133
R15KP120	**R15KP120C**	120	133	163	5.0	10	214	70	161
R15KP120A	**R15KP120CA**	120	133	147	5.0	10	193	78	146
R15KP130	**R15KP130C**	130	144	176	5.0	10	231	65	174
R15KP130A	**R15KP130CA**	130	144	159	5.0	10	209	72	158
R15KP150	**R15KP150C**	150	167	204	5.0	10	268	56	202
R15KP150A	**R15KP150CA**	150	167	185	5.0	10	243	62	184
R15KP160	**R15KP160C**	160	178	218	5.0	10	287	52	216
R15KP160A	**R15KP160CA**	160	178	197	5.0	10	259	58	196
R15KP170	**R15KP170C**	170	189	231	5.0	10	304	49	229
R15KP170A	**R15KP170CA**	170	189	209	5.0	10	275	55	208
R15KP180	**R15KP180C**	180	200	244	5.0	10	321	47	242
R15KP180A	**R15KP180CA**	180	200	221	5.0	10	287	52	220
R15KP200	**R15KP200C**	200	222	271	5.0	10	356	42	296
R15KP200A	**R15KP200CA**	200	222	245	5.0	10	325	46	274
R15KP220	**R15KP220C**	220	245	299	5.0	10	393	38	297
R15KP220A	**R15KP220CA**	220	245	271	5.0	10	347	43	273
R15KP240	**R15KP240C**	240	267	326	5.0	10	428	35	324
R15KP240A	**R15KP240CA**	240	267	295	5.0	10	387	39	300



Note:

Suffix "A" denotes 5% tolerance device , no suffix denotes a 10% tolerance device

Transient Voltage Suppressor Diodes

The plastic material carries U/L recognition 94V-0.

Type No.		Reverse Stand Off Voltage	Breakdown Voltage @ $I_{(BR)}$			Maximum Reverse Leakage @ V_{WM}	Maximum Clamping Voltage @ I_{PP}	Maximum Peak Pulse Current	Max. Voltage Temperature Variation of V_{BR}
(Unidirectional)	(Bidirectional)	V_{WM}	V_{BR} (V)		$I_{(BR)}$	I_R	V_C	I_{PP}	
		(V)	Min.	Max.	(mA)	(μA)	(V)	(A)	(mV/°C)

30KP Series, 30,000 W, Case Type: D6



30KP22	**30KP22C**	22	24.4	29.8	50	10000	41.1	730	27
30KP22A	**30KP22CA**	22	24.4	26.9	50	10000	37.1	808	24
30KP24	**30KP24C**	24	26.7	32.6	50	10000	45.0	666	30
30KP24A	**30KP24CA**	24	26.7	29.5	50	10000	40.7	738	27
30KP26	**30KP26C**	26	28.9	35.3	50	10000	48.7	616	32
30KP26A	**30KP26CA**	26	28.9	31.9	50	10000	44.0	682	29
30KP28	**30KP28C**	28	31.1	38.0	50	8000	52.4	572	35
30KP28A	**30KP28CA**	28	31.1	34.4	50	8000	47.5	632	31
30KP30	**30KP30C**	30	33.3	40.7	50	8000	56.2	534	37
30KP30A	**30KP30CA**	30	33.3	36.9	50	8000	50.7	592	33
30KP33	**30KP33C**	33	36.7	44.9	50	5000	64.6	496	42
30KP33A	**30KP33CA**	33	36.7	40.6	50	5000	58.6	548	38
30KP36	**30KP36C**	36	40.0	48.9	50	5000	68.2	454	46
30KP36A	**30KP36CA**	36	40.0	44.2	50	5000	61.8	502	41
30KP40	**30KP40C**	40	44.4	54.3	20	1500	75.8	412	51
30KP40A	**30KP40CA**	40	44.4	49.1	20	1500	68.6	456	46
30KP43	**30KP43C**	43	47.8	58.4	10	500	79.0	380	55
30KP43A	**30KP43CA**	43	47.8	52.8	10	500	71.0	430	50
30KP45	**30KP45C**	45	50.0	61.1	5	150	80.7	372	57
30KP45A	**30KP45CA**	45	50.0	55.3	5	150	73.0	410	52
30KP48	**30KP48C**	48	53.3	65.1	5	150	85.9	350	62
30KP48A	**30KP48CA**	48	53.3	58.9	5	150	77.7	386	56
30KP51	**30KP51C**	51	56.7	69.3	5	50	91.5	328	66
30KP51A	**30KP51CA**	51	56.7	62.7	5	50	82.8	362	60
30KP54	**30KP54C**	54	60.0	73.3	5	25	96.8	310	70
30KP54A	**30KP54CA**	54	60.0	66.3	5	25	87.5	342	63
30KP58	**30KP58C**	58	64.4	78.7	5	15	104	288	76
30KP58A	**30KP58CA**	58	64.4	71.2	5	15	94	320	68
30KP60	**30KP60C**	60	66.7	81.5	5	15	107	280	78
30KP60A	**30KP60CA**	60	66.7	73.7	5	15	97.3	304	71
30KP64	**30KP64C**	64	71.1	86.9	5	10	115	260	84
30KP64A	**30KP64CA**	64	71.1	78.6	5	10	104	288	76
30KP70	**30KP70C**	70	77.8	95.1	5	10	126	238	92
30KP70A	**30KP70CA**	70	77.8	86.0	5	10	114	264	83
30KP75	**30KP75C**	75	83.3	102	5	10	135	222	100
30KP75A	**30KP75CA**	75	83.3	92.1	5	10	122	246	89
30KP78	**30KP78C**	78	86.7	106	5	10	140	214	104
30KP78A	**30KP78CA**	78	86.7	95.8	5	10	126	238	93
30KP85	**30KP85C**	85	94.4	115	5	10	152	198	113
30KP85A	**30KP85CA**	85	94.4	104	5	10	137	218	102
30KP90	**30KP90C**	90	100	122	5	10	160	188	120
30KP90A	**30KP90CA**	90	100	111	5	10	146	206	109

Transient Voltage Suppressor Diodes

The plastic material carries U/L recognition 94V-0.

Type No.		Reverse Stand Off Voltage	Breakdown Voltage @ $I_{(BR)}$			Maximum Reverse Leakage @ V_{WM}	Maximum Clamping Voltage @ I_{PP}	Maximum Peak Pulse Current	Max. Voltage Temperature Variation of V_{BR}
(Unidirectional)	(Bidirectional)	V_{WM}	V_{BR} (V)		$I_{(BR)}$	I_R	V_C	I_{PP}	
		(V)	Min.	Max.	(mA)	(μA)	(V)	(A)	(mV/°C)

30KP Series, 30,000 W, Case Type: D6



30KP100	**30KP100C**	100	111	136	5	10	179	168	134
30KP100A	**30KP100CA**	100	111	123	5	10	162	186	121
30KP110	**30KP110C**	110	122	149	5	10	196	154	147
30KP110A	**30KP110CA**	110	122	135	5	10	178	168	133
30KP120	**30KP120C**	120	133	163	5	10	214	140	161
30KP120A	**30KP120CA**	120	133	147	5	10	193	156	145
30KP130	**30KP130C**	130	144	176	5	10	231	130	174
30KP130A	**30KP130CA**	130	144	159	5	10	209	142	157
30KP150	**30KP150C**	150	167	204	5	10	268	112	202
30KP150A	**30KP150CA**	150	167	185	5	10	243	124	183
30KP160	**30KP160C**	160	178	218	5	10	287	104	216
30KP160A	**30KP160CA**	160	178	197	5	10	259	116	195
30KP170	**30KP170C**	170	189	231	5	10	304	98	229
30KP170A	**30KP170CA**	170	189	209	5	10	275	110	207
30KP180	**30KP180C**	180	200	244	5	10	321	94	242
30KP180A	**30KP180CA**	180	200	221	5	10	291	104	219
30KP200	**30KP200C**	200	222	271	5	10	356	84	269
30KP200A	**30KP200CA**	200	222	245	5	10	322	94	243
30KP220	**30KP220C**	220	245	299	5	10	393	76	297
30KP220A	**30KP220CA**	220	245	271	5	10	356	84	269
30KP250A	**30KP250CA**	250	278	308	5	10	403	74	306
30KP260A	**30KP260CA**	260	289	320	5	10	419	71	318
30KP280A	**30KP280CA**	280	311	345	5	10	451	66	344
30KP300A	**30KP300CA**	300	333	369	5	10	483	62	368
30KP350A	**30KP350CA**	350	389	431	5	10	564	53	430
30KP400A	**30KP400CA**	400	444	492	5	10	644	46	490

Note:

Suffix "A" denotes 5% tolerance device , no suffix denotes a 10% tolerance device

Transient Voltage Suppressor Diodes

The plastic material carries U/L recognition 94V-0.

Type No.		Reverse Stand Off Voltage	Breakdown Voltage @ $I_{(BR)}$			Maximum Reverse Leakage @ V_{WM}	Maximum Clamping Voltage @ I_{PP}	Maximum Peak Pulse Current
(Unidirectional)	(Bidirectional)	V_{WM}	V_{BR} (V)		$I_{(BR)}$	I_R	V_C	I_{PP}
		(V)	Min.	Max.	(mA)	(μA)	(V)	(A)
50KP Series, 50,000 W, Case Type: D6								
50KP36	**50KP36C**	36	40.0	48.9	50	10000	68.2	733
50KP36A	**50KP36CA**	36	40.0	44.2	50	10000	61.8	809
50KP40	**50KP40C**	40	44.4	54.3	20	10000	75.8	659
50KP40A	**50KP40CA**	40	44.4	49.1	20	10000	68.6	728
50KP43	**50KP43C**	43	47.8	58.4	10	10000	79.0	632
50KP43A	**50KP43CA**	43	47.8	52.8	10	10000	71.0	704
50KP45	**50KP45C**	45	50.0	61.1	5	8000	80.7	619
50KP45A	**50KP45CA**	45	50.0	55.3	5	8000	73.0	684
50KP48	**50KP48C**	48	53.3	65.1	5	8000	85.9	582
50KP48A	**50KP48CA**	48	53.3	58.9	5	8000	77.7	643
50KP51	**50KP51C**	51	56.7	69.3	5	5000	91.5	546
50KP51A	**50KP51CA**	51	56.7	62.7	5	5000	82.8	603
50KP54	**50KP54C**	54	60.0	73.3	5	5000	96.8	516
50KP54A	**50KP54CA**	54	60.0	66.3	5	5000	87.5	571
50KP58	**50KP58C**	58	64.4	78.7	5	1500	104	480
50KP58A	**50KP58CA**	58	64.4	71.2	5	1500	94	531
50KP60	**50KP60C**	60	66.7	81.5	5	500	107	467
50KP60A	**50KP60CA**	60	66.7	73.7	5	500	97.3	513
50KP64	**50KP64C**	64	71.1	86.9	5	150	115	434
50KP64A	**50KP64CA**	64	71.1	78.6	5	150	104	480
50KP70	**50KP70C**	70	77.8	95.1	5	150	126	396
50KP70A	**50KP70CA**	70	77.8	86.0	5	150	114	438
50KP75	**50KP75C**	75	83.3	102	5	50	135	370
50KP75A	**50KP75CA**	75	83.3	92.1	5	50	122	409
50KP78	**50KP78C**	78	86.7	106	5	25	140	357
50KP78A	**50KP78CA**	78	86.7	95.8	5	25	126	396
50KP85	**50KP85C**	85	94.4	115	5	15	152	328
50KP85A	**50KP85CA**	85	94.4	104	5	15	137	364
50KP90	**50KP90C**	90	100	122	5	15	160	312
50KP90A	**50KP90CA**	90	100	111	5	15	146	342
50KP100	**50KP100C**	100	111	136	5	10	179	279
50KP100A	**50KP100CA**	100	111	123	5	10	162	308

Transient Voltage Suppressor Diodes

The plastic material carries U/L recognition 94V-0.

Type No.		Reverse Stand Off Voltage	Breakdown Voltage @ $I_{(BR)}$			Maximum Reverse Leakage @ V_{WM}	Maximum Clamping Voltage @ I_{PP}	Maximum Peak Pulse Current
(Unidirectional)	(Bidirectional)	V_{WM}	V_{BR} (V)		$I_{(BR)}$	I_R	V_C	I_{PP}
		(V)	Min.	Max.	(mA)	(μA)	(V)	(A)
50KP Series, 50,000 W, Case Type: D6								
50KP110	**50KP110C**	110	122	149	5	10	196	255
50KP110A	**50KP110CA**	110	122	135	5	10	178	280
50KP120	**50KP120C**	120	133	163	5	10	214	233
50KP120A	**50KP120CA**	120	133	147	5	10	193	259
50KP130	**50KP130C**	130	144	176	5	10	231	216
50KP130A	**50KP130CA**	130	144	159	5	10	209	239
50KP150	**50KP150C**	150	167	204	5	10	268	186
50KP150A	**50KP150CA**	150	167	185	5	10	243	205
50KP160	**50KP160C**	160	178	218	5	10	287	174
50KP160A	**50KP160CA**	160	178	197	5	10	259	193
50KP170	**50KP170C**	170	189	231	5	10	304	164
50KP170A	**50KP170CA**	170	189	209	5	10	275	181
50KP180	**50KP180C**	180	200	244	5	10	321	155
50KP180A	**50KP180CA**	180	200	221	5	10	291	171
50KP200	**50KP200C**	200	222	271	5	10	356	140
50KP200A	**50KP200CA**	200	222	245	5	10	322	155
50KP220	**50KP220C**	220	245	299	5	10	393	127
50KP220A	**50KP220CA**	220	245	271	5	10	356	140
50KP250A	**50KP250CA**	250	278	308	5	10	403	124
50KP260A	**50KP260CA**	260	289	320	5	10	419	119
50KP280A	**50KP280CA**	280	311	345	5	10	451	110
50KP300A	**50KP300CA**	300	333	369	5	10	483	103
50KP350A	**50KP350CA**	350	389	431	5	10	564	88
50KP400A	**50KP400CA**	400	444	492	5	10	644	77



Note: (1) For bidirectional type having V_{WM} of 60 volts and less, the I_D limit is double.

Low Capacitance
Transient Voltage Suppressor Diodes

The plastic material carries U/L recognition 94V-O.

Type No.	Breakdown Voltage @ It		Reverse Stand-off Voltage	Max. Reverse Leakage @ V_{RWM}	Max. Clamping Voltage @ I_{RSM} =5A	Max. Reverse Current	Max. Junction Capacitance @ 0 Volt	Working Inverse Blocking Voltage	Max. Inverse Blocking Current @ V_{WIB}	Peak Inverse Blocking Voltage
	V_{BR} (V)	It	V_{RWM}	I_R	V_{RSM}	I_{RSM}		V_{WIB}	I_{IB}	V_{PIB}
	Min.	(mA)	(V)	(μA)	(V)	(A)	pF	(V)	mA	(V)
SAC5.0	7.6	1.0	5.0	300	10.0	44	50	75	1.0	100
SAC6.0	7.9	1.0	6.0	300	11.2	41	50	75	1.0	100
SAC7.0	8.3	1.0	7.0	300	12.6	38	50	75	1.0	100
SAC8.0	8.9	1.0	8.0	100	13.4	36	50	75	1.0	100
SAC8.5	9.4	1.0	8.5	50	14.0	34	50	75	1.0	100
SAC10	11.1	1.0	10	5.0	16.3	29	50	75	1.0	100
SAC12	13.3	1.0	12	5.0	19.0	25	50	75	1.0	100
SAC15	16.7	1.0	15	5.0	23.6	20	50	75	1.0	100
SAC18	20.0	1.0	18	5.0	28.8	15	50	75	1.0	100
SAC22	24.4	1.0	22	5.0	35.4	14	50	75	1.0	100
SAC26	28.9	1.0	26	5.0	42.3	11.1	50	75	1.0	100
SAC30	33.3	1.0	30	5.0	48.6	10	50	75	1.0	100
SAC36	40.0	1.0	36	5.0	60.0	8.6	50	75	1.0	100
SAC45	50.0	1.0	45	5.0	77.0	6.8	50	150	1.0	200
SAC50	55.5	1.0	50	5.0	88.0	5.8	50	150	1.0	200

SAC Series, 500 W, Case Type: DO-41



Low Capacitance
Transient Voltage Suppressor Diodes

The plastic material carries U/L recognition 94V-0.

Type No.	Breakdown Voltage (1) @ I_T			Reverse Stand-off Voltage	Maximum Reverse Leakage @ V_{RWM}	Maximum Peak Pulse Surge Current	Maximum Clamping Voltage @ I_{PPM}	Maximum Junction Capacitance @ 0 Volt
	V_{BR} (V)		I_T	V_{RWM}	I_R	I_{PPM}	V_C	
	Min.	Max.	(mA)	(V)	(μA)	(A)	(V)	pF
SMBJ-LC Series, 600 W, Case Type: SMB								
SMBJ-LC5.0	7.20	8.62	10	5.0	800	62.5	9.6	80
SMBJ-LC5.0A	7.20	7.87	10	5.0	800	65.2	9.2	80
SMBJ-LC6.0	7.47	8.95	10	6.0	800	52.6	11.4	80
SMBJ-LC6.0A	7.47	8.17	10	6.0	800	58.3	10.3	80
SMBJ-LC6.5	8.02	9.62	10	6.5	500	48.7	12.3	80
SMBJ-LC6.5A	8.02	8.78	10	6.5	500	53.6	11.2	80
SMBJ-LC7.0	8.58	10.31	10	7.0	200	45.1	13.3	80
SMBJ-LC7.0A	8.58	9.40	10	7.0	200	50.0	12.0	80
SMBJ-LC7.5	9.13	11.00	1.0	7.5	100	42.0	14.3	80
SMBJ-LC7.5A	9.13	10.01	1.0	7.5	100	46.5	12.9	80
SMBJ-LC8.0	9.69	11.70	1.0	8.0	50	40.0	15.0	80
SMBJ-LC8.0A	9.69	10.63	1.0	8.0	50	44.1	13.6	80
SMBJ-LC8.5	10.24	12.3	1.0	8.5	10	37.7	15.9	80
SMBJ-LC8.5A	10.24	11.2	1.0	8.5	10	41.7	14.4	80
SMBJ-LC9.0	10.8	13.0	1.0	9.0	5.0	35.5	16.9	80
SMBJ-LC9.0A	10.8	11.9	1.0	9.0	5.0	39.0	15.4	80
SMBJ-LC10	11.9	14.4	1.0	10	1.0	31.9	18.8	80
SMBJ-LC10A	11.9	13.1	1.0	10	1.0	35.3	17.0	80
SMBJ-LC11	13.0	15.7	1.0	11	1.0	29.9	20.1	80
SMBJ-LC11A	13.0	14.3	1.0	11	1.0	33.0	18.2	80
SMBJ-LC12	14.1	17.1	1.0	12	1.0	27.3	22.0	80
SMBJ-LC12A	14.1	15.5	1.0	12	1.0	30.2	19.9	80
SMBJ-LC13	15.2	18.4	1.0	13	1.0	25.2	23.8	80
SMBJ-LC13A	15.2	16.7	1.0	13	1.0	27.9	21.5	80
SMBJ-LC14	16.4	19.9	1.0	14	1.0	23.3	25.8	80
SMBJ-LC14A	16.4	18.0	1.0	14	1.0	25.8	23.2	80
SMBJ-LC15	17.5	21.2	1.0	15	1.0	22.3	26.9	80
SMBJ-LC15A	17.5	19.3	1.0	15	1.0	24.0	24.4	80
SMBJ-LC16	18.6	22.6	1.0	16	1.0	20.8	28.8	80
SMBJ-LC16A	18.6	20.5	1.0	16	1.0	23.1	26.0	80
SMBJ-LC17	19.7	23.9	1.0	17	1.0	19.7	30.5	80
SMBJ-LC17A	19.7	21.7	1.0	17	1.0	21.7	27.6	80
SMBJ-LC18	20.8	25.2	1.0	18	1.0	18.6	32.2	80
SMBJ-LC18A	20.8	22.9	1.0	18	1.0	20.5	29.2	80
SMBJ-LC20	23.0	27.9	1.0	20	1.0	16.7	35.8	80
SMBJ-LC20A	23.0	25.3	1.0	20	1.0	18.5	32.4	80
SMBJ-LC22	25.2	30.6	1.0	22	1.0	15.2	39.4	80
SMBJ-LC22A	25.2	27.7	1.0	22	1.0	16.9	35.5	80
SMBJ-LC24	27.5	33.4	1.0	24	1.0	14.0	43.0	80
SMBJ-LC24A	27.5	30.3	1.0	24	1.0	15.4	38.9	80
SMBJ-LC26	29.7	36.1	1.0	26	1.0	12.4	46.6	80
SMBJ-LC26A	29.7	32.7	1.0	26	1.0	14.2	42.1	80
SMBJ-LC28	31.9	38.8	1.0	28	1.0	12.0	50.0	80
SMBJ-LC28A	31.9	35.2	1.0	28	1.0	13.2	45.4	80
SMBJ-LC30	34.1	41.5	1.0	30	1.0	11.2	53.5	80
SMBJ-LC30A	34.1	37.6	1.0	30	1.0	12.4	48.4	80
SMBJ-LC33	37.5	45.7	1.0	33	1.0	10.2	59.0	80
SMBJ-LC33A	37.5	41.4	1.0	33	1.0	11.3	53.3	80

Low Capacitance
Transient Voltage Suppressor Diodes

The plastic material carries U/L recognition 94V-0.

Type No.	Breakdown Voltage (1) @ I_T			Reverse Stand-off Voltage	Maximum Reverse Leakage @ V_{RWM}	Maximum Peak Pulse Surge Current	Maximum Clamping Voltage @ I_{PPM}	Maximum Junction Capacitance @ 0 Volt
	V_{BR} (V)		I_T	V_{RWM}	I_R	I_{PPM}	V_C	
	Min.	Max.	(mA)	(V)	(μA)	(A)	(V)	pF
SMBJ-LC Series, 600 W, Case Type: SMB								
SMBJ-LC36	40.8	49.7	1.0	36	1.0	9.3	64.3	80
SMBJ-LC36A	40.8	45.0	1.0	36	1.0	10.3	58.1	80
SMBJ-LC40	45.2	55.1	1.0	40	1.0	8.4	71.4	80
SMBJ-LC40A	45.2	49.9	1.0	40	1.0	9.3	64.5	80
SMBJ-LC43	48.6	59.2	1.0	43	1.0	7.8	76.7	80
SMBJ-LC43A	48.6	53.6	1.0	43	1.0	8.6	69.4	80
SMBJ-LC45	50.8	61.9	1.0	45	1.0	7.5	80.3	80
SMBJ-LC45A	50.8	56.1	1.0	45	1.0	8.3	72.7	80
SMBJ-LC48	54.1	65.9	1.0	48	1.0	7.0	85.5	80
SMBJ-LC48A	54.1	59.7	1.0	48	1.0	7.7	77.4	80
SMBJ-LC51	57.5	70.1	1.0	51	1.0	6.6	91.1	80
SMBJ-LC51A	57.5	63.5	1.0	51	1.0	7.3	82.4	80
SMBJ-LC54	60.8	74.1	1.0	54	1.0	6.2	96.3	80
SMBJ-LC54A	60.8	67.1	1.0	54	1.0	6.9	87.1	80
SMBJ-LC58	65.2	79.5	1.0	58	1.0	5.8	103	80
SMBJ-LC58A	65.2	72.0	1.0	58	1.0	6.4	93.6	80
SMBJ-LC60	67.5	82.3	1.0	60	1.0	5.6	107	80
SMBJ-LC60A	67.5	74.5	1.0	60	1.0	6.2	96.8	80
SMBJ-LC64	71.9	87.7	1.0	64	1.0	5.3	114	80
SMBJ-LC64A	71.9	79.4	1.0	64	1.0	5.8	103	80
SMBJ-LC70	78.6	95.9	1.0	70	1.0	4.8	125	80
SMBJ-LC70A	78.6	86.8	1.0	70	1.0	5.3	113	80
SMBJ-LC75	84.1	102.8	1.0	75	1.0	4.5	134	80
SMBJ-LC75A	84.1	92.9	1.0	75	1.0	4.9	121	80
SMBJ-LC78	87.5	106.8	1.0	78	1.0	4.3	139	80
SMBJ-LC78A	87.5	96.6	1.0	78	1.0	4.7	126	80
SMBJ-LC85	95.2	115.8	1.0	85	1.0	3.9	151	80
SMBJ-LC85A	95.2	104.8	1.0	85	1.0	4.4	137	80
SMBJ-LC90	100.8	122.8	1.0	90	1.0	3.8	160	80
SMBJ-LC90A	100.8	111.8	1.0	90	1.0	4.1	146	80
SMBJ-LC100	111.8	136.8	1.0	100	1.0	3.4	179	80
SMBJ-LC100A	111.8	123.8	1.0	100	1.0	3.7	162	80
SMBJ-LC110	122.8	149.8	1.0	110	1.0	3.0	196	80
SMBJ-LC110A	122.8	135.8	1.0	110	1.0	3.4	177	80
SMBJ-LC120	133.8	163.8	1.0	120	1.0	2.8	214	80
SMBJ-LC120A	133.8	147.8	1.0	120	1.0	3.1	193	80
SMBJ-LC130	144.8	176.8	1.0	130	1.0	2.6	231	80
SMBJ-LC130A	144.8	159.8	1.0	130	1.0	2.9	209	80
SMBJ-LC150	167.8	204.8	1.0	150	1.0	2.2	268	80
SMBJ-LC150A	167.8	185.8	1.0	150	1.0	2.5	243	80
SMBJ-LC160	178.8	218.8	1.0	160	1.0	2.1	287	80
SMBJ-LC160A	178.8	197.8	1.0	160	1.0	2.3	259	80
SMBJ-LC170	189.8	231.8	1.0	170	1.0	2.0	304	80
SMBJ-LC170A	189.8	209.8	1.0	170	1.0	2.2	275	80
SMBJ-LC188	209.8	255.8	1.0	188	1.0	1.7	344	80
SMBJ-LC188A	209.8	231.8	1.0	188	1.0	2.0	328	80

Notes: (1) Pulse test : tp ≤ 50ms.

(2) "SMBJ-L" will be omitted in marking on the diode.

Low Capacitance
Transient Voltage Suppressor Diodes

The plastic material carries U/L recognition 94V-O.

Type No.	Breakdown Voltage @ It			Reverse Stand-off Voltage	Max. Reverse Leakage @ V_{RWM}	Max. Clamping Voltage @ I_{RSM}	Max. Reverse Current	Max. Junction Capacitance @ 0 Volt	Working Inverse Blocking Voltage	Max. Inverse Blocking Current @ V_{WIB}	Peak Inverse Blocking Voltage
	V_{BR} (V)		It	V_{RWM}	I_R	V_{RSM}	I_{RSM}		V_{WIB}	I_{IB}	V_{PIB}
	Min.	Max.	(mA)	(V)	(μA)	(V)	(A)	pF	(V)	mA	(V)
LCE6.5	8.02	9.62	10	6.5	1000	14.3	100	100	75	1.0	100
LCE6.5A	8.02	8.78	10	6.5	1000	13.2	100	100	75	1.0	100
LCE7.0	8.58	10.31	10	7.0	500	15.3	100	100	75	1.0	100
LCE7.0A	8.58	9.40	10	7.0	500	14.0	100	100	75	1.0	100
LCE7.5	9.13	11.00	10	7.5	250	16.3	100	100	75	1.0	100
LCE7.5A	9.13	10.01	10	7.5	250	14.9	100	100	75	1.0	100
LCE8.0	9.69	11.70	10	8.0	100	17.0	100	100	75	1.0	100
LCE8.0A	9.69	10.63	10	8.0	100	15.6	100	100	75	1.0	100
LCE8.5	10.24	12.3	1.0	8.5	50	17.9	94	100	75	1.0	100
LCE8.5A	10.24	11.2	1.0	8.5	50	16.4	100	100	75	1.0	100
LCE9.0	10.8	13.0	1.0	9.0	10.0	18.9	89	100	75	1.0	100
LCE9.0A	10.8	11.9	1.0	9.0	10.0	17.4	97	100	75	1.0	100
LCE10	11.9	14.4	1.0	10	5.0	20.8	80	100	75	1.0	100
LCE10A	11.9	13.1	1.0	10	5.0	19.0	88	100	75	1.0	100
LCE11	13.0	15.7	1.0	11	5.0	22.1	74	100	75	1.0	100
LCE11A	13.0	14.3	1.0	11	5.0	20.2	82	100	75	1.0	100
LCE12	14.1	17.1	1.0	12	5.0	24.0	68	100	75	1.0	100
LCE12A	14.1	15.5	1.0	12	5.0	21.9	75	100	75	1.0	100
LCE13	15.2	18.4	1.0	13	5.0	25.8	63	100	75	1.0	100
LCE13A	15.2	16.7	1.0	13	5.0	23.5	70	100	75	1.0	100
LCE14	16.4	19.9	1.0	14	5.0	27.8	58	100	75	1.0	100
LCE14A	16.4	18.0	1.0	14	5.0	25.2	65	100	75	1.0	100
LCE15	17.5	21.2	1.0	15	5.0	28.9	56	100	75	1.0	100
LCE15A	17.5	19.3	1.0	15	5.0	26.4	61	100	75	1.0	100
LCE16	18.6	22.6	1.0	16	5.0	30.8	52	100	75	1.0	100
LCE16A	18.6	20.5	1.0	16	5.0	28.0	57	100	75	1.0	100
LCE17	19.7	23.9	1.0	17	5.0	32.5	49	100	75	1.0	100
LCE17A	19.7	21.7	1.0	17	5.0	29.6	54	100	75	1.0	100
LCE18	20.8	25.2	1.0	18	5.0	34.2	46	100	75	1.0	100
LCE18A	20.8	22.9	1.0	18	5.0	31.2	51	100	75	1.0	100
LCE20	23.0	27.9	1.0	20	5.0	37.8	42	100	75	1.0	100
LCE20A	23.0	25.3	1.0	20	5.0	34.4	46	100	75	1.0	100
LCE22	25.2	30.6	1.0	22	5.0	41.4	38	100	75	1.0	100
LCE22A	25.2	27.7	1.0	22	5.0	37.5	42	100	75	1.0	100
LCE24	27.5	33.4	1.0	24	5.0	45.0	35	100	75	1.0	100
LCE24A	27.5	30.3	1.0	24	5.0	40.9	39	100	75	1.0	100
LCE26	29.7	36.1	1.0	26	5.0	48.6	32	100	75	1.0	100
LCE26A	29.7	32.7	1.0	26	5.0	44.1	36	100	75	1.0	100
LCE28	31.9	38.8	1.0	28	5.0	52.1	30	100	75	1.0	100
LCE28A	31.9	35.2	1.0	28	5.0	47.5	33	100	75	1.0	100

LCE Series, 1500 W, Case Type: DO-201



Low Capacitance
Transient Voltage Suppressor Diodes

The plastic material carries U/L recognition 94V-O.

Type No.	Breakdown Voltage @ It			Reverse Stand-off Voltage	Max. Reverse Leakage @ V_{RWM}	Max. Clamping Voltage @ I_{RSM}	Max. Reverse Current	Max. Junction Capacitance @ 0 Volt	Working Inverse Blocking Voltage	Max. Inverse Blocking Current @ V_{WIB}	Peak Inverse Blocking Voltage
	V_{BR} (V)		It	V_{RWM}	I_R	V_{RSM}	I_{RSM}		V_{WIB}	I_{IB}	V_{PIB}
	Min.	Max.	(mA)	(V)	(μA)	(V)	(A)	pF	(V)	mA	(V)
LCE Series, 1500 W, Case Type: DO-201											
LCE30	34.1	41.5	1.0	30	5.0	55.5	28	100	75	1.0	100
LCE30A	34.1	37.6	1.0	30	5.0	50.4	31	100	75	1.0	100
LCE33	37.5	45.7	1.0	33	5.0	61.0	25.4	100	75	1.0	100
LCE33A	37.5	41.4	1.0	33	5.0	55.3	28.1	100	75	1.0	100
LCE36	40.8	49.7	1.0	36	5.0	66.3	23.3	100	75	1.0	100
LCE36A	40.8	45.0	1.0	36	5.0	60.1	25.8	100	75	1.0	100
LCE40	45.2	55.1	1.0	40	5.0	73.4	21	100	75	1.0	100
LCE40A	45.2	49.9	1.0	40	5.0	66.5	23.3	100	75	1.0	100
LCE43	48.6	59.2	1.0	43	5.0	78.7	19.5	100	150	1.0	200
LCE43A	48.6	53.6	1.0	43	5.0	71.4	21.6	100	150	1.0	200
LCE45	50.8	61.9	1.0	45	5.0	82.3	18.7	100	150	1.0	200
LCE45A	50.8	56.1	1.0	45	5.0	74.7	20.6	100	150	1.0	200
LCE48	54.1	65.9	1.0	48	5.0	87.5	17.5	100	150	1.0	200
LCE48A	54.1	59.7	1.0	48	5.0	79.4	19.4	100	150	1.0	200
LCE51	57.5	70.1	1.0	51	5.0	93.1	16.5	100	150	1.0	200
LCE51A	57.5	63.5	1.0	51	5.0	84.4	18.2	100	150	1.0	200
LCE54	60.8	74.1	1.0	54	5.0	98.3	15.6	100	150	1.0	200
LCE54A	60.8	67.1	1.0	54	5.0	89.1	17.2	100	150	1.0	200
LCE58	65.2	79.5	1.0	58	5.0	105.0	14.6	100	150	1.0	200
LCE58A	65.2	72.0	1.0	58	5.0	95.6	16	100	150	1.0	200
LCE60	67.5	82.3	1.0	60	5.0	109.0	14	90	150	1.0	200
LCE60A	67.5	74.5	1.0	60	5.0	98.8	15.5	90	150	1.0	200
LCE64	71.9	87.7	1.0	64	5.0	116.0	13.2	90	150	1.0	200
LCE64A	71.9	79.4	1.0	64	5.0	105.0	14.6	90	150	1.0	200
LCE70	78.6	95.9	1.0	70	5.0	127.0	12.0	90	150	1.0	200
LCE70A	78.6	86.8	1.0	70	5.0	115.0	13.3	90	150	1.0	200
LCE75	84.1	102.8	1.0	75	5.0	136.0	11.2	90	150	1.0	200
LCE75A	84.1	92.9	1.0	75	5.0	123.0	12.4	90	150	1.0	200
LCE80	95.2	115.8	1.0	80	5.0	144.0	10.6	90	150	1.0	200
LCE80A	95.2	104.8	1.0	80	5.0	131.0	11.6	90	150	1.0	200
LCE90	100.8	122.8	1.0	90	5.0	162.0	9.4	90	300	1.0	200
LCE90A	100.8	111.8	1.0	90	5.0	148.0	10.3	90	300	1.0	200



Low Capacitance
Transient Voltage Suppressor Diodes

The plastic material carries U/L recognition 94V-O.

Type Number	Reverse Stand-off Voltage	Breakdown Voltage @ $I_{(BR)}$			Maximum Reverse Leakage @ V_{WM}	Maximum Clamping Voltage @ I_{PP}	Maximum Peak Pulse Current @ 10/1000	Maximum Junction Capacitance @ 0 Volt	Working Inverse Blocking Voltage	Inverse Blocking Leakage Current	Peak Inverse Blocking Voltage
	V_{WM}	V_{BR} (V)		$I_{(BR)}$	I_D	V_C	I_{PP}		V_{WIB}	I_{IB}	V_{PIB}
	(V)	Min.	Max.	(mA)	(μA)	(V)	(A)	pF	(V)	mA	(V)
SMCJLCE Series, 1500 W, Case Type: SMC											
SMCJLCE6.5	6.5	7.22	8.82	10	1000	12.3	100	75	75	1.0	100
SMCJLCE6.5A	6.5	7.22	7.98	10	1000	11.2	100	75	75	1.0	100
SMCJLCE7.0	7.0	7.78	9.51	10	500	13.3	100	75	75	1.0	100
SMCJLCE7.0A	7.0	7.78	8.60	10	500	12.0	100	75	75	1.0	100
SMCJLCE7.5	7.5	8.33	10.2	10	250	14.3	100	100	75	1.0	100
SMCJLCE7.5A	7.5	8.33	9.21	10	250	12.9	100	100	75	1.0	100
SMCJLCE8.0	8.0	8.89	10.9	10	100	15.0	100	100	75	1.0	100
SMCJLCE8.0A	8.0	8.89	9.83	1.0	100	13.6	100	100	75	1.0	100
SMCJLCE8.5	8.5	9.44	11.5	1.0	50	15.9	94	100	75	1.0	100
SMCJLCE8.5A	8.5	9.44	10.4	1.0	50	14.4	100	100	75	1.0	100
SMCJLCE9.0	9.0	10.0	12.2	1.0	10	16.9	89	100	75	1.0	100
SMCJLCE9.0A	9.0	10.0	11.1	1.0	10	15.4	97	100	75	1.0	100
SMCJLCE10	10	11.1	13.6	1.0	5.0	18.8	80	100	75	1.0	100
SMCJLCE10A	10	11.1	12.3	1.0	5.0	17.0	88	100	75	1.0	100
SMCJLCE11	11	12.2	14.9	1.0	5.0	20.1	74	100	75	1.0	100
SMCJLCE11A	11	12.2	13.5	1.0	5.0	18.2	82	100	75	1.0	100
SMCJLCE12	12	13.3	16.3	1.0	5.0	22.0	68	100	75	1.0	100
SMCJLCE12A	12	13.3	14.7	1.0	5.0	19.9	75	100	75	1.0	100
SMCJLCE13	13	14.4	17.6	1.0	5.0	23.8	63	100	75	1.0	100
SMCJLCE13A	13	14.4	15.9	1.0	5.0	21.5	70	100	75	1.0	100
SMCJLCE14	14	15.6	19.1	1.0	5.0	25.8	58	100	75	1.0	100
SMCJLCE14A	14	15.6	17.2	1.0	5.0	23.2	65	100	75	1.0	100
SMCJLCE15	15	16.7	20.4	1.0	5.0	26.9	56	100	75	1.0	100
SMCJLCE15A	15	16.7	18.5	1.0	5.0	24.4	61	100	75	1.0	100
SMCJLCE16	16	17.8	21.8	1.0	5.0	28.8	52	100	75	1.0	100
SMCJLCE16A	16	17.8	19.7	1.0	5.0	26.0	57	100	75	1.0	100
SMCJLCE17	17	18.9	23.1	1.0	5.0	30.5	49	100	75	1.0	100
SMCJLCE17A	17	18.9	20.9	1.0	5.0	27.6	54	100	75	1.0	100
SMCJLCE18	18	20.0	24.4	1.0	5.0	32.2	46	100	75	1.0	100
SMCJLCE18A	18	20.0	22.1	1.0	5.0	29.2	51	100	75	1.0	100
SMCJLCE20	20	22.2	27.1	1.0	5.0	35.8	42	100	75	1.0	100
SMCJLCE20A	20	22.2	24.5	1.0	5.0	32.4	46	100	75	1.0	100
SMCJLCE22	22	24.4	29.8	1.0	5.0	39.4	38	100	75	1.0	100
SMCJLCE22A	22	24.4	26.9	1.0	5.0	35.5	42	100	75	1.0	100
SMCJLCE24	24	26.7	32.6	1.0	5.0	43.0	35	100	75	1.0	100
SMCJLCE24A	24	26.7	29.5	1.0	5.0	38.9	39	100	75	1.0	100
SMCJLCE26	26	28.9	35.3	1.0	5.0	46.6	32	100	75	1.0	100
SMCJLCE26A	26	28.9	31.9	1.0	5.0	42.1	36	100	75	1.0	100
SMCJLCE28	28	31.1	38.0	1.0	5.0	50.1	30	100	75	1.0	100
SMCJLCE28A	28	31.1	34.4	1.0	5.0	45.5	33	100	75	1.0	100
SMCJLCE30	30	33.3	40.7	1.0	5.0	53.5	28	100	75	1.0	100
SMCJLCE30A	30	33.3	36.8	1.0	5.0	48.4	31	100	75	1.0	100
SMCJLCE33	33	36.7	44.9	1.0	5.0	59.0	25.4	100	75	1.0	100
SMCJLCE33A	33	36.7	40.6	1.0	5.0	53.3	28.1	100	75	1.0	100

Low Capacitance
Transient Voltage Suppressor Diodes

The plastic material carries U/L recognition 94V-O.

Type Number	Reverse Stand-off Voltage	Breakdown Voltage @ $I_{(BR)}$			Maximum Reverse Leakage @ V_{WM}	Maximum Clamping Voltage @ I_{PP}	Maximum Peak Pulse Current @ 10/1000	Maximum Junction Capacitance @ 0 Volt	Working Inverse Blocking Voltage	Inverse Blocking Leakage Current	Peak Inverse Blocking Voltage
	V_{WM}	V_{BR} (V)		$I_{(BR)}$	I_D	V_C	I_{PP}		V_{WIB}	I_{IB}	V_{PIB}
	(V)	Min.	Max.	(mA)	(μA)	(V)	(A)	pF	(V)	mA	(V)
SMCJLCE Series, 1500 W, Case Type: SMC											
SMCJLCE36	36	40.0	48.9	1.0	5.0	64.3	23.3	100	75	1.0	100
SMCJLCE36A	36	40.0	44.2	1.0	5.0	58.1	25.8	100	75	1.0	100
SMCJLCE40	40	44.4	54.3	1.0	5.0	71.4	21.0	100	75	1.0	100
SMCJLCE40A	40	44.4	49.1	1.0	5.0	64.5	23.3	100	75	1.0	100
SMCJLCE43	43	47.8	58.4	1.0	5.0	76.7	19.5	100	150	1.0	200
SMCJLCE43A	43	47.8	52.8	1.0	5.0	69.4	21.6	100	150	1.0	200
SMCJLCE45	45	50.0	61.1	1.0	5.0	80.3	18.7	100	150	1.0	200
SMCJLCE45A	45	50.0	55.3	1.0	5.0	72.7	20.6	100	150	1.0	200
SMCJLCE48	48	53.3	65.1	1.0	5.0	85.5	17.5	100	150	1.0	200
SMCJLCE48A	48	53.3	58.9	1.0	5.0	77.4	19.4	100	150	1.0	200
SMCJLCE51	51	56.7	69.3	1.0	5.0	91.1	16.5	100	150	1.0	200
SMCJLCE51A	51	56.7	62.7	1.0	5.0	82.4	18.2	100	150	1.0	200
SMCJLCE54	54	60.0	73.3	1.0	5.0	96.3	15.6	100	150	1.0	200
SMCJLCE54A	54	60.0	66.3	1.0	5.0	87.1	17.2	100	150	1.0	200
SMCJLCE58	58	64.4	78.7	1.0	5.0	103	14.6	100	150	1.0	200
SMCJLCE58A	58	64.4	71.2	1.0	5.0	93.6	16.0	100	150	1.0	200
SMCJLCE60	60	66.7	81.5	1.0	5.0	107	14.0	90	150	1.0	200
SMCJLCE60A	60	66.7	73.7	1.0	5.0	96.8	15.5	90	150	1.0	200
SMCJLCE64	64	71.1	86.9	1.0	5.0	114	13.2	90	150	1.0	200
SMCJLCE64A	64	71.1	78.6	1.0	5.0	103	14.6	90	150	1.0	200
SMCJLCE70	70	77.8	95.1	1.0	5.0	125	12.0	90	150	1.0	200
SMCJLCE70A	70	77.8	86.0	1.0	5.0	113	13.3	90	150	1.0	200
SMCJLCE75	75	83.3	102	1.0	5.0	134	11.2	90	150	1.0	200
SMCJLCE75A	75	83.3	92.1	1.0	5.0	121	12.4	90	150	1.0	200
SMCJLCE80	80	88.7	108	1.0	5.0	142	10.6	90	150	1.0	200
SMCJLCE80A	80	88.7	98.0	1.0	5.0	129	11.6	90	150	1.0	200
SMCJLCE90	90	100	122	1.0	5.0	160	9.4	90	300	1.0	200
SMCJLCE90A	90	100	111	1.0	5.0	146	10.3	90	300	1.0	200
SMCJLCE100	100	111	136	1.0	5.0	179	8.4	90	300	1.0	200
SMCJLCE100A	100	111	123	1.0	5.0	162	9.3	90	300	1.0	200
SMCJLCE110	110	122	149	1.0	5.0	196	7.7	90	300	1.0	400
SMCJLCE110A	110	122	135	1.0	5.0	178	8.4	90	300	1.0	400
SMCJLCE120	120	133	163	1.0	5.0	214	7.0	90	300	1.0	400
SMCJLCE120A	120	133	147	1.0	5.0	193	7.8	90	300	1.0	400
SMCJLCE130	130	144	176	1.0	5.0	231	6.5	90	300	1.0	400
SMCJLCE130A	130	144	159	1.0	5.0	209	7.2	90	300	1.0	400
SMCJLCE150	150	167	204	1.0	5.0	268	5.6	90	300	1.0	400
SMCJLCE150A	150	167	185	1.0	5.0	243	6.2	90	300	1.0	400
SMCJLCE160	160	178	218	1.0	5.0	287	5.2	90	300	1.0	400
SMCJLCE160A	160	178	197	1.0	5.0	259	5.8	90	300	1.0	400
SMCJLCE170	170	189	231	1.0	5.0	304	4.9	90	300	1.0	400
SMCJLCE170A	170	189	209	1.0	5.0	275	5.4	90	300	1.0	400

Low Capacitance
Transient Voltage Suppressor Diodes

The plastic material carries U/L recognition 94V-0.

Type No.	Breakdown Voltage @ $I_{(BR)}$			Reverse Stand-off Voltage	Maximum Clamping Voltage @ I_{PP}	Peak Pulse Current	Maximum Standby Current @ V_{WM}	Maximum Junction Capacitance @ 0 Volt
	V_{BR} (V)		$I_{(BR)}$	V_{WM}	V_C	I_{PP}	I_D	
	Min.	Max.	(mA)	(V)	(V)	(A)	(μA)	pF
SMLJ-LCxx Series, 3000 W, Case Type: SMC								
SMLJ-LC5.0	7.40	8.30	10	5.0	9.6	312.5	1000	100
SMLJ-LC5.0A	7.40	8.00	10	5.0	9.2	326.0	1000	100
SMLJ-LC6.0	7.67	9.15	10	6.0	11.4	263.2	1000	100
SMLJ-LC6.0A	7.67	8.37	10	6.0	10.3	291.3	1000	100
SMLJ-LC6.5	8.22	9.82	10	6.5	12.3	243.9	500	100
SMLJ-LC6.5A	8.22	8.98	10	6.5	11.2	267.9	500	100
SMLJ-LC7.0	8.78	10.51	10	7.0	13.3	225.6	200	100
SMLJ-LC7.0A	8.78	9.60	10	7.0	12.0	250.0	200	100
SMLJ-LC7.5	9.33	11.2	1.0	7.5	14.3	209.8	100	100
SMLJ-LC7.5A	9.33	10.21	1.0	7.5	12.9	232.6	100	100
SMLJ-LC8.0	9.89	11.9	1.0	8.0	15.0	200.0	50	100
SMLJ-LC8.0A	9.89	10.83	1.0	8.0	13.6	220.6	50	100
SMLJ-LC8.5	10.44	12.5	1.0	8.5	15.9	188.6	25	100
SMLJ-LC8.5A	10.44	11.4	1.0	8.5	14.4	208.4	25	100
SMLJ-LC9.0	11.0	13.2	1.0	9.0	16.9	177.4	10	100
SMLJ-LC9.0A	11.0	12.1	1.0	9.0	15.4	194.8	10	100
SMLJ-LC10	12.1	14.6	1.0	10	18.8	159.6	5	100
SMLJ-LC10A	12.1	13.3	1.0	10	17.0	176.4	5	100
SMLJ-LC11	13.2	15.9	1.0	11	20.1	149.2	5	100
SMLJ-LC11A	13.2	14.5	1.0	11	18.2	164.8	5	100
SMLJ-LC12	14.3	17.3	1.0	12	22.0	136.4	5	100
SMLJ-LC12A	14.3	15.7	1.0	12	19.9	150.6	5	100
SMLJ-LC13	15.4	18.6	1.0	13	23.8	126.0	5	100
SMLJ-LC13A	15.4	16.9	1.0	13	21.5	139.4	5	100
SMLJ-LC14	16.6	20.1	1.0	14	25.8	116.2	2	100
SMLJ-LC14A	16.6	18.2	1.0	14	23.2	129.4	2	100
SMLJ-LC15	17.7	21.4	1.0	15	26.9	111.6	2	100
SMLJ-LC15A	17.7	19.5	1.0	15	24.4	123.0	2	100
SMLJ-LC16	18.8	22.8	1.0	16	28.8	104.2	2	100
SMLJ-LC16A	18.8	20.7	1.0	16	26.0	115.4	2	100
SMLJ-LC17	19.9	24.1	1.0	17	30.5	98.4	2	100
SMLJ-LC17A	19.9	21.9	1.0	17	27.6	106.6	2	100
SMLJ-LC18	21.0	25.4	1.0	18	32.2	93.2	2	100
SMLJ-LC18A	21.0	23.1	1.0	18	29.2	102.8	2	100
SMLJ-LC20	23.2	28.1	1.0	20	35.8	83.8	2	100
SMLJ-LC20A	23.2	25.5	1.0	20	32.4	92.6	2	100
SMLJ-LC22	25.4	30.8	1.0	22	39.4	76.2	2	100
SMLJ-LC22A	25.4	27.9	1.0	22	35.5	84.4	2	100
SMLJ-LC24	27.7	33.6	1.0	24	43.0	69.8	2	100
SMLJ-LC24A	27.7	30.5	1.0	24	38.9	77.2	2	100
SMLJ-LC26	29.9	36.3	1.0	26	46.6	64.4	2	100
SMLJ-LC26A	29.9	32.9	1.0	26	42.1	71.2	2	100
SMLJ-LC28	32.1	39.0	1.0	28	50.0	60.0	2	100
SMLJ-LC28A	32.1	35.4	1.0	28	45.4	66.0	2	100
SMLJ-LC30	34.3	41.7	1.0	30	53.5	56.0	2	100
SMLJ-LC30A	34.3	37.8	1.0	30	48.4	62.0	2	100
SMLJ-LC33	37.7	45.9	1.0	33	59.0	50.4	2	100
SMLJ-LC33A	37.7	41.6	1.0	33	53.3	56.2	2	100



Low Capacitance
Transient Voltage Suppressor Diodes

The plastic material carries U/L recognition 94V-0.

Type No.	Breakdown Voltage @ $I_{(BR)}$			Reverse Stand-off Voltage	Maximum Clamping Voltage @ I_{PP}	Peak Pulse Current	Maximum Standby Current @ V_{WM}	Maximum Junction Capacitance @ 0 Volt
	V_{BR} (V)		$I_{(BR)}$	V_{WM}	V_C	I_{PP}	I_D	
	Min.	Max.	(mA)	(V)	(V)	(A)	(μA)	pF
SMLJ-LCxx Series, 3000 W, Case Type: SMC								
SMLJ-LC36	41.0	49.9	1.0	36	64.3	46.6	2	100
SMLJ-LC36A	41.0	45.2	1.0	36	58.1	51.6	2	100
SMLJ-LC40	45.4	55.3	1.0	40	71.4	42.0	2	100
SMLJ-LC40A	45.4	50.1	1.0	40	64.5	46.4	2	100
SMLJ-LC43	48.8	59.4	1.0	43	76.7	39.2	2	100
SMLJ-LC43A	48.8	53.8	1.0	43	69.4	43.2	2	100
SMLJ-LC45	51.0	62.1	1.0	45	80.3	37.4	2	100
SMLJ-LC45A	51.0	56.3	1.0	45	72.7	41.2	2	100
SMLJ-LC48	54.3	66.1	1.0	48	85.5	35.0	2	100
SMLJ-LC48A	54.3	59.9	1.0	48	77.4	38.8	2	100
SMLJ-LC51	57.7	70.3	1.0	51	91.1	37.0	2	100
SMLJ-LC51A	57.7	63.7	1.0	51	82.4	36.4	2	100
SMLJ-LC54	61.0	74.3	1.0	54	96.3	31.2	2	100
SMLJ-LC54A	61.0	67.3	1.0	54	87.1	34.4	2	100
SMLJ-LC58	65.4	79.7	1.0	58	103	39.2	2	100
SMLJ-LC58A	65.4	72.2	1.0	58	93.6	32.0	2	100
SMLJ-LC60	67.7	82.5	1.0	60	107	28.0	2	90
SMLJ-LC60A	67.7	74.7	1.0	60	96.8	31.0	2	90
SMLJ-LC64	72.1	87.9	1.0	64	114	26.4	2	90
SMLJ-LC64A	72.1	79.6	1.0	64	103	29.2	2	90
SMLJ-LC70	78.8	96.1	1.0	70	125	24.0	2	90
SMLJ-LC70A	78.8	87.0	1.0	70	113	26.6	2	90
SMLJ-LC75	84.3	103.0	1.0	75	134	22.4	2	90
SMLJ-LC75A	84.3	93.1	1.0	75	121	24.8	2	90
SMLJ-LC78	87.7	107.0	1.0	78	139	21.6	2	90
SMLJ-LC78A	87.7	96.8	1.0	78	126	22.8	2	90
SMLJ-LC85	95.4	116	1.0	85	151	19.8	2	90
SMLJ-LC85A	95.4	105	1.0	85	137	20.8	2	90
SMLJ-LC90	101	123	1.0	90	160	18.8	2	90
SMLJ-LC90A	101	112	1.0	90	146	20.6	2	90
SMLJ-LC100	112	137	1.0	100	179	16.8	2	90
SMLJ-LC100A	112	124	1.0	100	162	18.6	2	90
SMLJ-LC110	123	150	1.0	110	196	15.4	2	90
SMLJ-LC110A	123	136	1.0	110	177	16.8	2	90
SMLJ-LC120	134	164	1.0	120	214	14.0	2	90
SMLJ-LC120A	134	148	1.0	120	193	15.6	2	90
SMLJ-LC130	145	177	1.0	130	231	13.0	2	90
SMLJ-LC130A	145	160	1.0	130	209	14.4	2	90
SMLJ-LC150	168	205	1.0	150	268	11.2	2	90
SMLJ-LC150A	168	186	1.0	150	243	12.4	2	90
SMLJ-LC160	179	219	1.0	160	287	10.4	2	90
SMLJ-LC160A	179	198	1.0	160	259	11.6	2	90
SMLJ-LC170	190	232	1.0	170	304	9.8	2	90
SMLJ-LC170A	190	210	1.0	170	275	11.0	2	90



Notes: (1) Pulse test : tp ≤ 50ms.

(2) "SMLJ-L" will be omitted in marking on the diode.

Ultra Low Capacitance Transient Voltage Suppressor Diodes

The plastic material carries U/L recognition 94V-O.

Type No.	Breakdown Voltage @ It			Reverse Stand-off Voltage	Max. Reverse Leakage @ V_{RWM}	Max. Clamping Voltage @ I_{RSM}	Max. Reverse Current	Max. Junction Capacitance @ 0 Volt	Working Inverse Blocking Voltage	Max. Inverse Blocking Current @ V_{WIB}	Peak Inverse Blocking Voltage
	V_{BR} (V)		It	V_{RWM}	I_R	V_{RSM}	I_{RSM}		V_{WIB}	I_{IB}	V_{PIB}
	Min.	Max.	(mA)	(V)	(μA)	(V)	(A)	pF	(V)	mA	(V)

ULCE Series, 1500 W, Case Type: DO-201



ULCE6.5	8.82	10.42	10	6.5	1000	16.3	100	35	75	1.0	100
ULCE6.5A	8.82	9.58	10	6.5	1000	15.2	100	35	75	1.0	100
ULCE7.0	9.38	11.11	10	7.0	500	17.3	100	35	75	1.0	100
ULCE7.0A	9.38	10.20	10	7.0	500	16.0	100	35	75	1.0	100
ULCE7.5	9.93	11.80	10	7.5	250	18.3	100	35	75	1.0	100
ULCE7.5A	9.93	10.81	10	7.5	250	16.9	100	35	75	1.0	100
ULCE8.0	10.49	12.50	10	8.0	100	19.0	100	35	75	1.0	100
ULCE8.0A	10.49	11.43	10	8.0	100	17.6	100	35	75	1.0	100
ULCE8.5	11.04	13.1	1.0	8.5	50	19.9	94	35	75	1.0	100
ULCE8.5A	11.04	12.0	1.0	8.5	50	18.4	100	35	75	1.0	100
ULCE9.0	11.6	13.8	1.0	9.0	10.0	20.9	89	35	75	1.0	100
ULCE9.0A	11.6	12.7	1.0	9.0	10.0	19.4	97	35	75	1.0	100
ULCE10	12.7	15.2	1.0	10	5.0	22.8	80	35	75	1.0	100
ULCE10A	12.7	13.9	1.0	10	5.0	21.0	88	35	75	1.0	100
ULCE11	13.8	16.5	1.0	11	5.0	24.1	74	35	75	1.0	100
ULCE11A	13.8	15.1	1.0	11	5.0	22.2	82	35	75	1.0	100
ULCE12	14.9	17.9	1.0	12	5.0	26.0	68	35	75	1.0	100
ULCE12A	14.9	16.3	1.0	12	5.0	23.9	75	35	75	1.0	100
ULCE13	16.0	19.2	1.0	13	5.0	27.8	63	35	75	1.0	100
ULCE13A	16.0	17.5	1.0	13	5.0	25.5	70	35	75	1.0	100
ULCE14	17.2	20.7	1.0	14	5.0	29.8	58	35	75	1.0	100
ULCE14A	17.2	18.8	1.0	14	5.0	27.2	65	35	75	1.0	100
ULCE15	18.3	22.0	1.0	15	5.0	30.9	56	35	75	1.0	100
ULCE15A	18.3	20.1	1.0	15	5.0	28.4	61	35	75	1.0	100
ULCE16	19.4	23.4	1.0	16	5.0	32.8	52	35	75	1.0	100
ULCE16A	19.4	21.3	1.0	16	5.0	30.0	57	35	75	1.0	100
ULCE17	20.5	24.7	1.0	17	5.0	34.5	49	35	75	1.0	100
ULCE17A	20.5	22.5	1.0	17	5.0	31.6	54	35	75	1.0	100
ULCE18	21.6	26.0	1.0	18	5.0	36.2	46	35	75	1.0	100
ULCE18A	21.6	23.7	1.0	18	5.0	33.2	51	35	75	1.0	100
ULCE20	23.8	28.7	1.0	20	5.0	39.8	42	35	75	1.0	100
ULCE20A	23.8	26.1	1.0	20	5.0	36.4	46	35	75	1.0	100
ULCE22	26.0	31.4	1.0	22	5.0	43.4	38	35	75	1.0	100
ULCE22A	26.0	28.5	1.0	22	5.0	39.5	42	35	75	1.0	100
ULCE24	28.3	34.2	1.0	24	5.0	47.0	35	35	75	1.0	100
ULCE24A	28.3	31.1	1.0	24	5.0	42.9	39	35	75	1.0	100
ULCE26	30.5	36.9	1.0	26	5.0	50.6	32	35	75	1.0	100
ULCE26A	30.5	33.5	1.0	26	5.0	46.1	36	35	75	1.0	100

Ultra Low Capacitance Transient Voltage Suppressor Diodes

The plastic material carries U/L recognition 94V-O.

Type No.	Breakdown Voltage @ It			Reverse Stand-off Voltage	Max. Reverse Leakage @ V_{RWM}	Max. Clamping Voltage @ I_{RSM}	Max. Reverse Current	Max. Junction Capacitance @ 0 Volt	Working Inverse Blocking Voltage	Max. Inverse Blocking Current @ V_{WIB}	Peak Inverse Blocking Voltage
	V_{BR} (V)		It	V_{RWM}	I_R	V_{RSM}	I_{RSM}		V_{WIB}	I_{IB}	V_{PIB}
	Min.	Max.	(mA)	(V)	(μA)	(V)	(A)	pF	(V)	mA	(V)
ULCE Series, 1500 W, Case Type: DO-201											
ULCE28	32.7	39.6	1.0	28	5.0	54.1	30	35	75	1.0	100
ULCE28A	32.7	36.0	1.0	28	5.0	49.5	33	35	75	1.0	100
ULCE30	34.9	42.3	1.0	30	5.0	57.5	28	35	75	1.0	100
ULCE30A	34.9	38.4	1.0	30	5.0	52.4	31	35	75	1.0	100
ULCE33	38.3	46.5	1.0	33	5.0	63.0	25.4	35	75	1.0	100
ULCE33A	38.3	42.2	1.0	33	5.0	57.3	28.1	35	75	1.0	100
ULCE36	41.6	50.5	1.0	36	5.0	68.3	23.3	35	75	1.0	100
ULCE36A	41.6	45.8	1.0	36	5.0	62.1	25.8	35	75	1.0	100
ULCE40	46.0	55.9	1.0	40	5.0	75.4	21	35	75	1.0	100
ULCE40A	46.0	50.7	1.0	40	5.0	68.5	23.3	35	75	1.0	100
ULCE43	49.4	60.0	1.0	43	5.0	80.7	19.5	35	150	1.0	200
ULCE43A	49.4	54.4	1.0	43	5.0	73.4	21.6	35	150	1.0	200
ULCE45	51.6	62.7	1.0	45	5.0	84.3	18.7	35	150	1.0	200
ULCE45A	51.6	56.9	1.0	45	5.0	76.7	20.6	35	150	1.0	200
ULCE48	54.9	66.7	1.0	48	5.0	89.5	17.5	35	150	1.0	200
ULCE48A	54.9	60.5	1.0	48	5.0	81.4	19.4	35	150	1.0	200
ULCE51	58.3	70.9	1.0	51	5.0	95.1	16.5	35	150	1.0	200
ULCE51A	58.3	64.3	1.0	51	5.0	86.4	18.2	35	150	1.0	200
ULCE54	61.6	74.9	1.0	54	5.0	100.3	15.6	35	150	1.0	200
ULCE54A	61.6	67.9	1.0	54	5.0	91.1	17.2	35	150	1.0	200
ULCE58	66.0	80.3	1.0	58	5.0	107.0	14.6	35	150	1.0	200
ULCE58A	66.0	72.8	1.0	58	5.0	97.6	16	35	150	1.0	200
ULCE60	68.3	83.1	1.0	60	5.0	111.0	14	35	150	1.0	200
ULCE60A	68.3	75.3	1.0	60	5.0	100.8	15.5	35	150	1.0	200
ULCE64	72.7	88.5	1.0	64	5.0	118.0	13.2	35	150	1.0	200
ULCE64A	72.7	80.2	1.0	64	5.0	107.0	14.6	35	150	1.0	200
ULCE70	79.4	96.7	1.0	70	5.0	129.0	12.0	35	150	1.0	200
ULCE70A	79.4	87.6	1.0	70	5.0	117.0	13.3	35	150	1.0	200
ULCE75	84.9	103.6	1.0	75	5.0	138.0	11.2	35	150	1.0	200
ULCE75A	84.9	93.7	1.0	75	5.0	125.0	12.4	35	150	1.0	200
ULCE80	90.3	109.6	1.0	80	5.0	146.0	10.6	35	150	1.0	200
ULCE80A	90.3	99.6	1.0	80	5.0	133.0	11.6	35	150	1.0	200
ULCE90	101.6	123.6	1.0	90	5.0	164.0	9.4	35	300	1.0	200
ULCE90A	101.6	112.6	1.0	90	5.0	150.0	10.3	35	300	1.0	200



Automotive Transient Suppressor Diodes

The plastic material carries U/L recognition 94V-0.

Type No.	Breakdown Voltage @ I_R (Note 1) at Tc = 25 °C			Working Peak Reverse Voltage	Maximum Average Forward Rectified Current		Maximum Reverse Current	Maximum Reverse Leakage @ V_{RWM}	Typical Temperature Coefficient of V_{BR}
	V_{BR} (V)		I_R	V_{RWM}	$I_{F(AV)}$ @ Tc		I_{RSM}	I_R	
	Min.	Max.	(mA)	(V)	(A)	(°C)	(A)	(nA)	(% / °C)
MR2535 Series, Case Type: MR									
MR2535	24	32	100	20	35	150	110	200	0.096
MR2540	24	32	100	20	50	150	150	200	0.096
MR3230	38	42	100	30	32	150	77.0	1000	-
MR2535L Series, Case Type: D6									
MR2535L	24	32	100	20	35	150	110	200	0.096
MR2540L	24	32	100	20	50	150	150	200	0.096





* For wire leads use suffix "AL" for Case Type : MR-L

Note :

(1) Pulse set : Pulse Width ≤ 300μs, Duty Cycle ≤ 2%

Automotive Transient Suppressor Diodes

The plastic material carries U/L recognition 94V-0.

Type No.	Breakdown Voltage @ It (Note 1)			Working Peak Reverse Voltage	Maximum Reverse Leakage @ V_{RWM}	Maximum Reverse Leakage @ VRWM, Tj=150°C	Maximum Peak Pulse Surge Current	Maximum Clamping Voltage @ I_{PPM}
	V_{BR} (V)		It	V_{RWM}	I_R	I_D	I_{PPM}(2)	V_{RSM}
	Min.	Max.	(mA)	(V)	(μA)	(μA)	(A)	(V)

TPSMC6.8 Series, 1500 W, Case Type: SMC



TPSMC6.8	6.12	7.48	10	5.50	1000	10000	139	10.8
TPSMC6.8A	6.45	7.14	10	5.80	1000	10000	143	10.5
TPSMC7.5	6.75	8.25	10	6.05	500	5000	128	11.7
TPSMC7.5A	7.13	7.88	10	6.40	500	2000	132	11.3
TPSMC8.2	7.38	9.02	10	6.63	200	2000	120	12.5
TPSMC8.2A	7.79	8.61	10	7.02	200	500	124	12.1
TPSMC9.1	8.19	10.0	1.0	7.37	50	500	109	13.8
TPSMC9.1A	8.65	9.55	1.0	7.78	50	200	112	13.4
TPSMC10	9.00	11.0	1.0	8.10	20	200	100	15.0
TPSMC10A	9.50	10.5	1.0	8.55	20	50	103	14.5
TPSMC11	9.90	12.1	1.0	8.92	5.0	50	92.6	16.2
TPSMC11A	10.5	11.6	1.0	9.40	5.0	10	96.2	15.6
TPSMC12	10.8	13.2	1.0	9.72	2.0	10	86.7	17.3
TPSMC12A	11.4	12.6	1.0	10.2	2.0	10	89.8	16.7
TPSMC13	11.7	14.3	1.0	10.5	2.0	10	78.9	19.0
TPSMC13A	12.4	13.7	1.0	11.1	2.0	10	82.4	18.2
TPSMC15	13.5	16.5	1.0	12.1	1.0	10	68.2	22.0
TPSMC15A	14.3	15.8	1.0	12.8	1.0	10	70.8	21.2
TPSMC16	14.4	17.6	1.0	12.9	1.0	10	63.8	23.5
TPSMC16A	15.2	16.8	1.0	13.6	1.0	10	66.7	22.5
TPSMC18	16.2	19.8	1.0	14.5	1.0	10	56.6	26.5
TPSMC18A	17.1	18.9	1.0	15.3	1.0	10	59.5	25.2
TPSMC20	18.0	22.0	1.0	16.2	1.0	10	51.5	29.1
TPSMC20A	19.0	21.0	1.0	17.1	1.0	10	54.2	27.7
TPSMC22	19.8	24.2	1.0	17.8	1.0	10	47.0	31.9
TPSMC22A	20.9	23.1	1.0	18.8	1.0	10	49.0	30.6
TPSMC24	21.6	26.4	1.0	19.4	1.0	10	43.2	34.7
TPSMC24A	22.8	25.2	1.0	20.5	1.0	10	45.2	33.2
TPSMC27	24.3	29.7	1.0	21.8	1.0	10	38.4	39.1
TPSMC27A	25.7	28.4	1.0	23.1	1.0	10	40.0	37.5
TPSMC30	27.0	33.0	1.0	24.3	1.0	10	34.5	43.5
TPSMC30A	28.5	31.5	1.0	25.6	1.0	10	36.2	41.4
TPSMC33	29.7	36.3	1.0	26.8	1.0	10	31.4	47.7
TPSMC33A	31.4	34.7	1.0	28.2	1.0	10	32.8	45.7
TPSMC36	32.4	39.6	1.0	29.1	1.0	10	28.8	52.0
TPSMC36A	34.2	37.8	1.0	30.8	1.0	10	30.1	49.9
TPSMC39	35.1	42.9	1.0	31.6	1.0	10	26.6	56.4
TPSMC39A	37.1	41.0	1.0	33.3	1.0	10	27.8	53.9
TPSMC43	38.7	47.3	1.0	34.8	1.0	10	24.2	61.9
TPSMC43A	40.9	45.2	1.0	36.8	1.0	10	25.3	59.3

Notes :

(1) V_{BR} measured after It applied for 300 μs., It = square wave pulse or equivalent

(2) "PSMC" will be omitted on marking of the diode

Silicon Bridge Rectifiers

The plastic material carries U/L recognition 94V-0.

Type No.	Max. Average Forward Rectified Current		Input Voltage Recommended	Max. Repetitive Peak Reverse Voltage	Max. Peak Forward Surge Current	Max. Forward Voltage Drop at Ta = 25°C		Max. Reverse Current at Ta = 25°C
	$I_{F(AV)}$ @	Tc		V_{RRM}	I_{FSM}	V_F @	I_F	I_R
	(A)	(°C)	(V)	(V)	(A)	(V)	(A)	(μA)
KBP200 Series, 2 A, Case Type: KBP								
KBP200	2.0	50	20	50	60	1.0	1.0	10
KBP201	2.0	50	40	100	60	1.0	1.0	10
KBP202	2.0	50	80	200	60	1.0	1.0	10
KBP204	2.0	50	125	400	60	1.0	1.0	10
KBP206	2.0	50	250	600	60	1.0	1.0	10
KBP208	2.0	50	380	800	60	1.0	1.0	10
KBP210	2.0	50	440	1000	60	1.0	1.0	10
KBL400 Series, 4 A, Case Type: KBL								
KBL400	4.0	50	20	50	200	1.1	4.0	10
KBL401	4.0	50	40	100	200	1.1	4.0	10
KBL402	4.0	50	80	200	200	1.1	4.0	10
KBL404	4.0	50	125	400	200	1.1	4.0	10
KBL406	4.0	50	250	600	200	1.1	4.0	10
KBL408	4.0	50	380	800	200	1.1	4.0	10
KBL410	4.0	50	440	1000	200	1.1	4.0	10
KBU4A-M Series, 4 A, Case Type: KBU								
KBU4A	4.0	30	-	50	200	1.0	4.0	5.0
KBU4B	4.0	30	-	100	200	1.0	4.0	5.0
KBU4D	4.0	30	-	200	200	1.0	4.0	5.0
KBU4G	4.0	30	-	400	200	1.0	4.0	5.0
KBU4J	4.0	30	-	600	200	1.0	4.0	5.0
KBU4K	4.0	30	-	800	200	1.0	4.0	5.0
KBU4M	4.0	30	-	1000	200	1.0	4.0	5.0
KBU6A-M Series, 6 A, Case Type: KBU								
KBU6A	6.0	100	-	50	250	1.0	6.0	5.0
KBU6B	6.0	100	-	100	250	1.0	6.0	5.0
KBU6D	6.0	100	-	200	250	1.0	6.0	5.0
KBU6G	6.0	100	-	400	250	1.0	6.0	5.0
KBU6J	6.0	100	-	600	250	1.0	6.0	5.0
KBU6K	6.0	100	-	800	250	1.0	6.0	5.0
KBU6M	6.0	100	-	1000	250	1.0	6.0	5.0







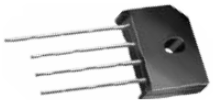

Silicon Bridge Rectifiers

The plastic material carries U/L recognition 94V-0.

Type No.	Max. Average Forward Rectified Current		Input Voltage Recommended	Max. Repetitive Peak Reverse Voltage	Max. Peak Forward Surge Current	Max. Forward Voltage Drop at Ta = 25°C		Max. Reverse Current at Ta = 25°C
	$I_{F(AV)}$ @	Tc		V_{RRM}	I_{FSM}	V_F @	I_F	I_R
	(A)	(°C)	(V)	(V)	(A)	(V)	(A)	(μA)
KBU8A-M Series, 8 A, Case Type: KBU								
KBU8A	8.0	65	-	50	250	1.0	8.0	10
KBU8B	8.0	65	-	100	250	1.0	8.0	10
KBU8D	8.0	65	-	200	250	1.0	8.0	10
KBU8G	8.0	65	-	400	250	1.0	8.0	10
KBU8J	8.0	65	-	600	250	1.0	8.0	10
KBU8K	8.0	65	-	800	250	1.0	8.0	10
KBU8M	8.0	65	-	1000	250	1.0	8.0	10
GBU4A-M Series, 4 A, Case Type: GBU								
GBU4A	4.0	100	-	50	80	1.0	4.0	5.0
GBU4B	4.0	100	-	100	80	1.0	4.0	5.0
GBU4D	4.0	100	-	200	80	1.0	4.0	5.0
GBU4G	4.0	100	-	400	80	1.0	4.0	5.0
GBU4J	4.0	100	-	600	80	1.0	4.0	5.0
GBU4K	4.0	100	-	800	80	1.0	4.0	5.0
GBU4M	4.0	100	-	1000	80	1.0	4.0	5.0
GBU6A-M Series, 6 A, Case Type: GBU								
GBU6A	6.0	90	-	50	175	1.0	6.0	5.0
GBU6B	6.0	90	-	100	175	1.0	6.0	5.0
GBU6D	6.0	90	-	200	175	1.0	6.0	5.0
GBU6G	6.0	90	-	400	175	1.0	6.0	5.0
GBU6J	6.0	90	-	600	175	1.0	6.0	5.0
GBU6K	6.0	90	-	800	175	1.0	6.0	5.0
GBU6M	6.0	90	-	1000	175	1.0	6.0	5.0
GBU8A-M Series, 8 A, Case Type: GBU								
GBU8A	8.0	100	-	50	200	1.0	8.0	5.0
GBU8B	8.0	100	-	100	200	1.0	8.0	5.0
GBU8D	8.0	100	-	200	200	1.0	8.0	5.0
GBU8G	8.0	100	-	400	200	1.0	8.0	5.0
GBU8J	8.0	100	-	600	200	1.0	8.0	5.0
GBU8K	8.0	100	-	800	200	1.0	8.0	5.0
GBU8M	8.0	100	-	1000	200	1.0	8.0	5.0



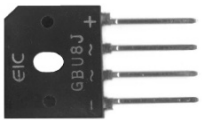

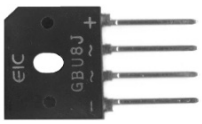

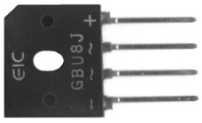

Silicon Bridge Rectifiers

The plastic material carries U/L recognition 94V-0.

Type No.		Max. Average Forward Rectified Current		Input Voltage Recommended	Max. Repetitive Peak Reverse Voltage	Max. Peak Forward Surge Current	Max. Forward Voltage Drop at Ta = 25°C		Max. Reverse Current at Ta = 25°C
		$I_{F(AV)}$ @	Tc		V_{RRM}	I_{FSM}	V_F @	I_F	I_R
DIP	SIP	(A)	(°C)	(V)	(V)	(A)	(V)	(A)	(μA)
RBV400 Series, 4 A, Case Type: RBV4									
	RBV401	4.0	50	-	100	80	1.05	2.0	10
	RBV402	4.0	50	-	200	80	1.05	2.0	10
	RBV404	4.0	50	-	400	80	1.10	2.0	10
	RBV406	4.0	50	-	600	80	1.10	2.0	10
	RBV408	4.0	50	-	800	80	1.10	2.0	10
	RBV410	4.0	50	-	1000	80	1.10	2.0	10
D3SB10 Series, 4 A, Case Type: RBV4									
	D3SB10	4.0	25	-	100	120	1.05	2.0	10
	D3SB20	4.0	25	-	200	120	1.05	2.0	10
	D3SB40	4.0	25	-	400	120	1.10	2.0	10
	D3SB60	4.0	25	-	600	120	1.10	2.0	10
	D3SB80	4.0	25	-	800	120	1.10	2.0	10
	D4SB80	4.0	108	-	800	150	0.95	2.0	10
D3SBA10 Series, 4 A, Case Type: RBV4									
	D3SBA10	4.0	25	-	100	80	1.05	2.0	10
	D3SBA20	4.0	25	-	200	80	1.05	2.0	10
	D3SBA40	4.0	25	-	400	80	1.05	2.0	10
	D3SBA60	4.0	25	-	600	80	1.05	2.0	10
	D3SBA80	4.0	25	-	800	80	1.05	2.0	10
	D3SBA100	4.0	25	-	1000	80	1.05	2.0	10
D5SBA10 Series, 6 A, Case Type: RBV25									
	D5SBA10	6.0	25	-	100	120	1.05	3.0	10
	D5SBA20	6.0	25	-	200	120	1.05	3.0	10
	D5SBA40	6.0	25	-	400	120	1.10	3.0	10
	D5SBA60	6.0	25	-	600	120	1.10	3.0	10
BR600/RBV600 Series, 6 A, Case Type: BR6/RBV25									
BR600	**RBV600**	6.0	50	20	50	200	1.0	3.0	10
BR601	**RBV601**	6.0	50	40	100	200	1.0	3.0	10
BR602	**RBV602**	6.0	50	80	200	200	1.0	3.0	10
BR604	**RBV604**	6.0	50	125	400	200	1.0	3.0	10
BR606	**RBV606**	6.0	50	250	600	200	1.0	3.0	10
BR608	**RBV608**	6.0	50	380	800	200	1.0	3.0	10
BR610	**RBV610**	6.0	50	440	1000	200	1.0	3.0	10



BR6

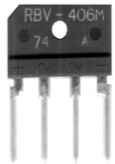

RBV4



RBV25

Silicon Bridge Rectifiers

The plastic material carries U/L recognition 94V-0.

Type No.		Max. Average Forward Rectified Current		Input Voltage Recommended	Max. Repetitive Peak Reverse Voltage	Max. Peak Forward Surge Current	Max. Forward Voltage Drop at Ta = 25°C		Max. Reverse Current at Ta = 25°C
		$I_{F(AV)}$ @	Tc		V_{RRM}	I_{FSM}	V_F @	I_F	I_R
DIP	SIP	(A)	(°C)	(V)	(V)	(A)	(V)	(A)	(μA)
RBV600D Series, 6 A, Case Type: RBV25									
	RBV600D	6.0	50	20	50	300	1.0	6.0	10
	RBV601D	6.0	50	40	100	300	1.0	6.0	10
	RBV602D	6.0	50	80	200	300	1.0	6.0	10
	RBV604D	6.0	50	125	400	300	1.0	6.0	10
	RBV606D	6.0	50	250	600	300	1.0	6.0	10
	RBV608D	6.0	50	380	800	300	1.0	6.0	10
	RBV610D	6.0	50	440	1000	300	1.0	6.0	10
BR800/RBV800 Series, 8 A, Case Type: BR10/RBV25									
BR800	**RBV800**	8.0	50	20	50	300	1.0	4.0	10
BR801	**RBV801**	8.0	50	40	100	300	1.0	4.0	10
BR802	**RBV802**	8.0	50	80	200	300	1.0	4.0	10
BR804	**RBV804**	8.0	50	125	400	300	1.0	4.0	10
BR806	**RBV806**	8.0	50	250	600	300	1.0	4.0	10
BR808	**RBV808**	8.0	50	380	800	300	1.0	4.0	10
BR810	**RBV810**	8.0	50	440	1000	300	1.0	4.0	10
RBV800D Series, 8 A, Case Type: RBV25									
	RBV800D	8.0	50	20	50	300	1.0	8.0	10
	RBV801D	8.0	50	40	100	300	1.0	8.0	10
	RBV802D	8.0	50	80	200	300	1.0	8.0	10
	RBV804D	8.0	50	125	400	300	1.0	8.0	10
	RBV806D	8.0	50	250	600	300	1.0	8.0	10
	RBV808D	8.0	50	380	800	300	1.0	8.0	10
	RBV810D	8.0	50	440	1000	300	1.0	8.0	10
BR1000/RBV1000 Series, 10 A, Case Type: BR10/RBV25									
BR1000	**RBV1000**	10	55	20	50	300	1.0	5.0	10
BR1001	**RBV1001**	10	55	40	100	300	1.0	5.0	10
BR1002	**RBV1002**	10	55	80	200	300	1.0	5.0	10
BR1004	**RBV1004**	10	55	125	400	300	1.0	5.0	10
BR1006	**RBV1006**	10	55	250	600	300	1.0	5.0	10
BR1008	**RBV1008**	10	55	380	800	300	1.0	5.0	10
BR1010	**RBV1010**	10	55	440	1000	300	1.0	5.0	10



BR6



RBV25

Silicon Bridge Rectifiers

The plastic material carries U/L recognition 94V-0.

Type No.		Max. Average Forward Rectified Current		Input Voltage Recommended	Max. Repetitive Peak Reverse Voltage	Max. Peak Forward Surge Current	Max. Forward Voltage Drop at Ta = 25°C		Max. Reverse Current at Ta = 25°C
		$I_{F(AV)}$ @	Tc		V_{RRM}	I_{FSM}	V_F @	I_F	I_R
DIP	SIP	(A)	(°C)	(V)	(V)	(A)	(V)	(A)	(μA)
RBV1000D Series, 10 A, Case Type: RBV25									
	RBV1000D	10	55	20	50	300	1.1	10	10
	RBV1001D	10	55	40	100	300	1.1	10	10
	RBV1002D	10	55	80	200	300	1.1	10	10
	RBV1004D	10	55	125	400	300	1.1	10	10
	RBV1006D	10	55	250	600	300	1.1	10	10
	RBV1008D	10	55	380	800	300	1.1	10	10
	RBV1010D	10	55	440	1000	300	1.1	10	10
KBPC1000 Series, 10 A, Case Type: BR50M									
KBPC1000		10	55	-	50	200	1.2	5.0	10
KBPC1001		10	55	-	100	200	1.2	5.0	10
KBPC1002		10	55	-	200	200	1.2	5.0	10
KBPC1004		10	55	-	400	200	1.2	5.0	10
KBPC1006		10	55	-	600	200	1.2	5.0	10
KBPC1008		10	55	-	800	200	1.2	5.0	10
KBPC1010		10	55	-	1000	200	1.2	5.0	10
BR1500/RBV1500 Series, 15 A, Case Type: BR50/RBV25									
BR1500	**RBV1500**	15	55	20	50	300	1.1	7.5	10
BR1501	**RBV1501**	15	55	40	100	300	1.1	7.5	10
BR1502	**RBV1502**	15	55	80	200	300	1.1	7.5	10
BR1504	**RBV1504**	15	55	125	400	300	1.1	7.5	10
BR1506	**RBV1506**	15	55	250	600	300	1.1	7.5	10
BR1508	**RBV1508**	15	55	380	800	300	1.1	7.5	10
BR1510	**RBV1510**	15	55	440	1000	300	1.1	7.5	10
RBV1500D Series, 15 A, Case Type: RBV25									
	RBV1500D	15	55	20	50	300	1.1	15	10
	RBV1501D	15	55	40	100	300	1.1	15	10
	RBV1502D	15	55	80	200	300	1.1	15	10
	RBV1504D	15	55	125	400	300	1.1	15	10
	RBV1506D	15	55	250	600	300	1.1	15	10
	RBV1508D	15	55	380	800	300	1.1	15	10
	RBV1510D	15	55	440	1000	300	1.1	15	10

* For wire leads use suffix "W" for Case Type : BR50W



RBV25

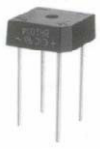

BR10



BR50



BR50W



BR50M

Silicon Bridge Rectifiers

The plastic material carries U/L recognition 94V-0.

Type No.		Max. Average Forward Rectified Current		Input Voltage Recommended	Max. Repetitive Peak Reverse Voltage	Max. Peak Forward Surge Current	Max. Forward Voltage Drop at Ta = 25°C		Max. Reverse Current at Ta = 25°C
		$I_{F(AV)}$ @	Tc		V_{RRM}	I_{FSM}	V_F @	I_F	I_R
DIP	SIP	(A)	(°C)	(V)	(V)	(A)	(V)	(A)	(μA)
KBPC1500 Series, 15 A, Case Type: BR50M									
KBPC1500		15	55	-	50	300	1.2	7.5	10
KBPC1501		15	55	-	100	300	1.2	7.5	10
KBPC1502		15	55	-	200	300	1.2	7.5	10
KBPC1504		15	55	-	400	300	1.2	7.5	10
KBPC1506		15	55	-	600	300	1.2	7.5	10
KBPC1508		15	55	-	800	300	1.2	7.5	10
KBPC1510		15	55	-	1000	300	1.2	7.5	10
S15VB20 Series, 15 A, Case Type: BR50									
S15VB20		15	83	-	200	200	1.05	7.5	10
S15VB60		15	83	-	600	200	1.05	7.5	10
D20XB20 Series, 20 A, Case Type: RBV25									
	D20XB20	20	87	-	200	240	1.1	10	10
	D20XB60	20	87	-	600	240	1.1	10	10
	D20XB80	20	87	-	800	240	1.1	10	10
	D20XB100	20	87	-	1000	240	1.1	10	10
BR2500/RBV2500 Series, 25 A, Case Type: BR50/RBV25									
BR2500	**RBV2500**	25	55	20	50	300	1.1	12.5	10
BR2501	**RBV2501**	25	55	40	100	300	1.1	12.5	10
BR2502	**RBV2502**	25	55	80	200	300	1.1	12.5	10
BR2504	**RBV2504**	25	55	125	400	300	1.1	12.5	10
BR2506	**RBV2506**	25	55	250	600	300	1.1	12.5	10
BR2508	**RBV2508**	25	55	380	800	300	1.1	12.5	10
BR2510	**RBV2510**	25	55	440	1000	300	1.1	12.5	10
D25XB20 Series, 25 A, Case Type: RBV25									
	D25XB20	25	98	-	200	350	1.05	12.5	10
	D25XB60	25	98	-	600	350	1.05	12.5	10

* For wire leads use suffix "W" for Case Type : BR50W



RBV25



BR50

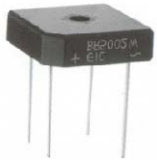

BR50W



BR50M

Silicon Bridge Rectifiers

The plastic material carries U/L recognition 94V-0.

Type No.		Max. Average Forward Rectified Current		Input Voltage Recommended	Max. Repetitive Peak Reverse Voltage	Max. Peak Forward Surge Current	Max. Forward Voltage Drop at Ta = 25°C		Max. Reverse Current at Ta = 25°C
		$I_{F(AV)}$ @	Tc		V_{RRM}	I_{FSM}	V_F @	I_F	I_R
DIP	SIP	(A)	(°C)	(V)	(V)	(A)	(V)	(A)	(μA)
GBJ2500 Series, 25 A, Case Type: RBV25									
	GBJ2500	25	100	-	50	300	1.1	12.5	10
	GBJ2501	25	100	-	100	300	1.1	12.5	10
	GBJ2502	25	100	-	200	300	1.1	12.5	10
	GBJ2504	25	100	-	400	300	1.1	12.5	10
	GBJ2506	25	100	-	600	300	1.1	12.5	10
	GBJ2508	25	100	-	800	300	1.1	12.5	10
	GBJ2510	25	100	-	1000	300	1.1	12.5	10
S25VB20 Series, 25 A, Case Type: BR50									
S25VB20		25	85	-	200	400	1.05	12.5	10
S25VB60		25	85	-	600	400	1.05	12.5	10
RBV2500 Series, 25 A, Case Type: RBV25									
	RBV2500D	25	55	20	50	400	1.1	25	10
	RBV2501D	25	55	40	100	400	1.1	25	10
	RBV2502D	25	55	80	200	400	1.1	25	10
	RBV2504D	25	55	125	400	400	1.1	25	10
	RBV2506D	25	55	250	600	400	1.1	25	10
	RBV2508D	25	55	380	800	400	1.1	25	10
	RBV2510D	25	55	440	1000	400	1.1	25	10
KBPC2500 Series, 25 A, Case Type: BR50M									
KBPC2500		25	55	-	50	300	1.1	12.5	10
KBPC2501		25	55	-	100	300	1.1	12.5	10
KBPC2502		25	55	-	200	300	1.1	12.5	10
KBPC2504		25	55	-	400	300	1.1	12.5	10
KBPC2506		25	55	-	600	300	1.1	12.5	10
KBPC2508		25	55	-	800	300	1.1	12.5	10
KBPC2510		25	55	-	1000	300	1.1	12.5	10



RBV25



BR50

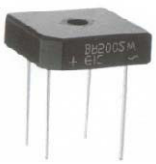

BR50W



BR50M

Silicon Bridge Rectifiers

The plastic material carries U/L recognition 94V-0.

Type No.		Max. Average Forward Rectified Current		Input Voltage Recommended	Max. Repetitive Peak Reverse Voltage	Max. Peak Forward Surge Current	Max. Forward Voltage Drop at Ta = 25°C		Max. Reverse Current at Ta = 25°C
		$I_{F(AV)}$ @	Tc		V_{RRM}	I_{FSM}	V_F @	I_F	I_R
DIP	SIP	(A)	(°C)	(V)	(V)	(A)	(V)	(A)	(μA)
KBPC3500 Series, 35 A, Case Type: BR50M									
KBPC3500		35	55	-	50	400	1.1	17.5	10
KBPC3501		35	55	-	100	400	1.1	17.5	10
KBPC3502		35	55	-	200	400	1.1	17.5	10
KBPC3504		35	55	-	400	400	1.1	17.5	10
KBPC3506		35	55	-	600	400	1.1	17.5	10
KBPC3508		35	55	-	800	400	1.1	17.5	10
KBPC3510		35	55	-	1000	400	1.1	17.5	10
BR3500/RBV3500 Series, 35 A, Case Type: BR50/RBV25									
BR3500	**RBV3500**	35	55	20	50	400	1.1	17.5	10
BR3501	**RBV3501**	35	55	40	100	400	1.1	17.5	10
BR3502	**RBV3502**	35	55	80	200	400	1.1	17.5	10
BR3504	**RBV3504**	35	55	125	400	400	1.1	17.5	10
BR3506	**RBV3506**	35	55	250	600	400	1.1	17.5	10
BR3508	**RBV3508**	35	55	380	800	400	1.1	17.5	10
BR3510	**RBV3510**	35	55	440	1000	400	1.1	17.5	10
BR5000/RBV5000 Series, 50 A, Case Type: BR50/RBV25									
BR5000	**RBV5000**	50	55	20	50	400	1.1	25	10
BR5001	**RBV5001**	50	55	40	100	400	1.1	25	10
BR5002	**RBV5002**	50	55	80	200	400	1.1	25	10
BR5004	**RBV5004**	50	55	125	400	400	1.1	25	10
BR5006	**RBV5006**	50	55	250	600	400	1.1	25	10
BR5008	**RBV5008**	50	55	380	800	400	1.1	25	10
BR5010	**RBV5010**	50	55	440	1000	400	1.1	25	10
KBPC5000 Series, 50 A, Case Type: BR50M									
KBPC5000		50	55	-	50	400	1.1	25	10
KBPC5001		50	55	-	100	400	1.1	25	10
KBPC5002		50	55	-	200	400	1.1	25	10
KBPC5004		50	55	-	400	400	1.1	25	10
KBPC5006		50	55	-	600	400	1.1	25	10
KBPC5008		50	55	-	800	400	1.1	25	10
KBPC5010		50	55	-	1000	400	1.1	25	10

* For wire leads use suffix "W" for Case Type : BR50W

* For wire leads use suffix "W" for Case Type : BR50W



RBV25



BR50



BR50W



BR50M

Glass Passivated Bridge Rectifiers

The plastic material carries U/L recognition 94V-0.

Type No.	Max. Average Forward Rectified Current		Input Voltage Recommended	Max. Repetitive Peak Reverse Voltage	Max. Peak Forward Surge Current	Max. Forward Voltage Drop at Ta = 25°C		Max. Reverse Current at Ta = 25°C
	$I_{F(AV)}$ @	Tc		V_{RRM}	I_{FSM}	V_F @	I_F	I_R
	(A)	(°C)	(V)	(V)	(A)	(V)	(A)	(μA)
W005G Series, 1.5 A, Case Type: WOB								
W005G	1.5	25	-	50	50	1.0	1.0	5
W01G	1.5	25	-	100	50	1.0	1.0	5
W02G	1.5	25	-	200	50	1.0	1.0	5
W04G	1.5	25	-	400	50	1.0	1.0	5
W06G	1.5	25	-	600	50	1.0	1.0	5
W08G	1.5	25	-	800	50	1.0	1.0	5
W10G	1.5	25	-	1000	50	1.0	1.0	5
KBL400G Series, 4 A, Case Type: KBL								
KBL400G	4.0	50 (Ta)	-	50	150	1.1	4.0	10
KBL401G	4.0	50 (Ta)	-	100	150	1.1	4.0	10
KBL402G	4.0	50 (Ta)	-	200	150	1.1	4.0	10
KBL404G	4.0	50 (Ta)	-	400	150	1.1	4.0	10
KBL406G	4.0	50 (Ta)	-	600	150	1.1	4.0	10
KBL408G	4.0	50 (Ta)	-	800	150	1.1	4.0	10
KBL410G	4.0	50 (Ta)	-	1000	150	1.1	4.0	10
GBPC6005 Series, 6 A, Case Type: BR6								
GBPC6005	6.0	50	-	50	175	1.0	3.0	5.0
GBPC601	6.0	50	-	100	175	1.0	3.0	5.0
GBPC602	6.0	50	-	200	175	1.0	3.0	5.0
GBPC604	6.0	50	-	400	175	1.0	3.0	5.0
GBPC606	6.0	50	-	600	175	1.0	3.0	5.0
GBPC608	6.0	50	-	800	175	1.0	3.0	5.0
GBPC610	6.0	50	-	1000	175	1.0	3.0	5.0
GBPC15005 Series, 15 A, Case Type: BR50								
GBPC15005	15	50	-	50	300	1.1	7.5	5.0
GBPC1501	15	50	-	100	300	1.1	7.5	5.0
GBPC1502	15	50	-	200	300	1.1	7.5	5.0
GBPC1504	15	50	-	400	300	1.1	7.5	5.0
GBPC1506	15	50	-	600	300	1.1	7.5	5.0
GBPC1508	15	50	-	800	300	1.1	7.5	5.0
GBPC1510	15	50	-	1000	300	1.1	7.5	5.0







BR6



BR50

Glass Passivated Bridge Rectifiers

The plastic material carries U/L recognition 94V-0.

Type No.	Max. Average Forward Rectified Current		Input Voltage Recommended	Max. Repetitive Peak Reverse Voltage	Max. Peak Forward Surge Current	Max. Forward Voltage Drop at Ta = 25°C		Max. Reverse Current at Ta = 25°C
	$I_{F(AV)}$ @	Tc		V_{RRM}	I_{FSM}	V_F @	I_F	I_R
	(A)	(°C)	(V)	(V)	(A)	(V)	(A)	(μA)
GBPC25005 Series, 25 A, Case Type: BR50								
GBPC25005	25	50	-	50	300	1.1	12.5	5.0
GBPC2501	25	50	-	100	300	1.1	12.5	5.0
GBPC2502	25	50	-	200	300	1.1	12.5	5.0
GBPC2504	25	50	-	400	300	1.1	12.5	5.0
GBPC2506	25	50	-	600	300	1.1	12.5	5.0
GBPC2508	25	50	-	800	300	1.1	12.5	5.0
GBPC2510	25	50	-	1000	300	1.1	12.5	5.0
GBPC25005W Series, 25 A, Case Type: BR50W								
GBPC25005W	25	50	-	50	300	1.1	12.5	5.0
GBPC2501W	25	50	-	100	300	1.1	12.5	5.0
GBPC2502W	25	50	-	200	300	1.1	12.5	5.0
GBPC2504W	25	50	-	400	300	1.1	12.5	5.0
GBPC2506W	25	50	-	600	300	1.1	12.5	5.0
GBPC2508W	25	50	-	800	300	1.1	12.5	5.0
GBPC2510W	25	50	-	1000	300	1.1	12.5	5.0
GBPC35005 Series, 35 A, Case Type: BR50								
GBPC35005	35	50	-	50	400	1.1	17.5	5.0
GBPC3501	35	50	-	100	400	1.1	17.5	5.0
GBPC3502	35	50	-	200	400	1.1	17.5	5.0
GBPC3504	35	50	-	400	400	1.1	17.5	5.0
GBPC3506	35	50	-	600	400	1.1	17.5	5.0
GBPC3508	35	50	-	800	400	1.1	17.5	5.0
GBPC3510	35	50	-	1000	400	1.1	17.5	5.0



BR50

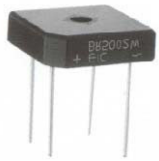

BR50W

Mini Bridge Rectifiers

The plastic material carries U/L recognition 94V-0.

Type No.	Max. Average Forward Rectified Current		Input Voltage Recommended	Max. Repetitive Peak Reverse Voltage	Max. Peak Forward Surge Current	Max. Forward Voltage Drop at Ta = 25°C		Max. Reverse Current at Ta = 25°C
	$I_{F(AV)}$ @ Tc			V_{RRM}	I_{FSM}	V_F @ I_F		I_R
	(A)	(°C)	(V)	(V)	(A)	(V)	(A)	(μA)
MB1S Series, 0.5 A, Case Type: MBS								
MB1S	0.5	30	-	100	35	1.0	0.4	5.0
MB2S	0.5	30	-	200	35	1.0	0.4	5.0
MB4S	0.5	30	-	400	35	1.0	0.4	5.0
MB6S	0.5	30	-	600	35	1.0	0.4	5.0
MB8S	0.5	30	-	800	35	1.0	0.4	5.0
MB10S	0.5	30	-	1000	35	1.0	0.4	5.0
MB1M Series, 0.5 A, Case Type: MBM								
MB1M	0.5	30	-	100	35	1.0	0.4	5.0
MB2M	0.5	30	-	200	35	1.0	0.4	5.0
MB4M	0.5	30	-	400	35	1.0	0.4	5.0
MB6M	0.5	30	-	600	35	1.0	0.4	5.0
MB8M	0.5	30	-	800	35	1.0	0.4	5.0
MB10M	0.5	30	-	1000	35	1.0	0.4	5.0
S1ZB20 Series, 0.8 A, Case Type: MBS								
S1ZB20	0.8	30	-	200	30	1.05	0.4	10
S1ZB60	0.8	30	-	600	30	1.05	0.4	10
S1ZB80	0.8	30	-	800	30	1.05	0.4	10
DB101 Series, 1 A, Case Type: DFM								
DB101	1.0	40	-	50	40	1.1	1.0	5.0
DB102	1.0	40	-	100	40	1.1	1.0	5.0
DB103	1.0	40	-	200	40	1.1	1.0	5.0
DB104	1.0	40	-	400	40	1.1	1.0	5.0
DB105	1.0	40	-	600	40	1.1	1.0	5.0
DB106	1.0	40	-	800	40	1.1	1.0	5.0
DB107	1.0	40	-	1000	40	1.1	1.0	5.0
DF005S Series, 1 A, Case Type: DFS								
DF005S	1.0	40	-	50	30	1.1	1.0	10
DF01S	1.0	40	-	100	30	1.1	1.0	10
DF02S	1.0	40	-	200	30	1.1	1.0	10
DF04S	1.0	40	-	400	30	1.1	1.0	10
DF06S	1.0	40	-	600	30	1.1	1.0	10
DF08S	1.0	40	-	800	30	1.1	1.0	10
DF10S	1.0	40	-	1000	30	1.1	1.0	10

Mini Bridge Rectifiers

The plastic material carries U/L recognition 94V-0.

Type No.	Max. Average Forward Rectified Current		Input Voltage Recommended	Max. Repetitive Peak Reverse Voltage	Max. Peak Forward Surge Current	Max. Forward Voltage Drop at Ta = 25°C		Max. Reverse Current at Ta = 25°C
	$I_{F(AV)}$ @ Tc			V_{RRM}	I_{FSM}	V_F @ I_F		I_R
	(A)	(°C)	(V)	(V)	(A)	(V)	(A)	(μA)
DF005M Series, 1 A, Case Type: DFM								
DF005M	1.0	40	-	50	30	1.1	1.0	5.0
DF01M	1.0	40	-	100	30	1.1	1.0	5.0
DF02M	1.0	40	-	200	30	1.1	1.0	5.0
DF04M	1.0	40	-	400	30	1.1	1.0	5.0
DF06M	1.0	40	-	600	30	1.1	1.0	5.0
DF08M	1.0	40	-	800	30	1.1	1.0	5.0
DF10M	1.0	40	-	1000	30	1.1	1.0	5.0
DF15005S Series, 1.5 A, Case Type: DFS								
DF15005S	1.5	40	-	50	50	1.1	1.5	10
DF1501S	1.5	40	-	100	50	1.1	1.5	10
DF1502S	1.5	40	-	200	50	1.1	1.5	10
DF1504S	1.5	40	-	400	50	1.1	1.5	10
DF1506S	1.5	40	-	600	50	1.1	1.5	10
DF1508S	1.5	40	-	800	50	1.1	1.5	10
DF1510S	1.5	40	-	1000	50	1.1	1.5	10
DF15005M Series, 1.5 A, Case Type: DFM								
DF15005M	1.5	40 (Ta)	-	50	50	1.1	1.5	5.0
DF1501M	1.5	40 (Ta)	-	100	50	1.1	1.5	5.0
DF1502M	1.5	40 (Ta)	-	200	50	1.1	1.5	5.0
DF1504M	1.5	40 (Ta)	-	400	50	1.1	1.5	5.0
DF1506M	1.5	40 (Ta)	-	600	50	1.1	1.5	5.0
DF1508M	1.5	40 (Ta)	-	800	50	1.1	1.5	5.0
DF1510M	1.5	40 (Ta)	-	1000	50	1.1	1.5	5.0







Avalanche Bridge Rectifiers

The plastic material carries U/L recognition 94V-0.

Type No.	Max. Average Forward Rectified Current		Input Voltage Recommended	Max. Recurrent Peak Reverse Voltage	Avalanche Breakdown Voltage at 100 mA		Max. Forward Peak Surge Current	Max. Forward Voltage Drop at Ta = 25°C		Max. Reverse Current at Ta = 25°C
	$I_{F(AV)}$ @ Tc			V_{RRM}	Min.	Max.	I_{FSM}	V_F @ I_F		I_R
	(A)	(°C)	(V)	(V)	(V)	(V)	(A)	(V)	(A)	(μA)
AKBL400 Series, 4 A, Case Type: KBL										
AKBL400	4.0	50	20	50	100	550	200	1.1	4.0	10
AKBL401	4.0	50	40	100	150	600	200	1.1	4.0	10
AKBL402	4.0	50	80	200	250	700	200	1.1	4.0	10
AKBL404	4.0	50	125	400	450	900	200	1.1	4.0	10
AKBL406	4.0	50	250	600	700	1150	200	1.1	4.0	10
AKBL408	4.0	50	380	800	900	1350	200	1.1	4.0	10
AKBL410	4.0	50	440	1000	1100	1550	200	1.1	4.0	10
ABR600 Series, 6 A, Case Type: BR6										
ABR600	6.0	50	20	50	100	550	200	1.0	3.0	10
ABR601	6.0	50	40	100	150	600	200	1.0	3.0	10
ABR602	6.0	50	80	200	250	700	200	1.0	3.0	10
ABR604	6.0	50	125	400	450	900	200	1.0	3.0	10
ABR606	6.0	50	250	600	700	1150	200	1.0	3.0	10
ABR608	6.0	50	380	800	900	1350	200	1.0	3.0	10
ABR610	6.0	50	440	1000	1100	1550	200	1.0	3.0	10
ABR800 Series, 8 A, Case Type: BR10										
ABR800	8.0	50	20	50	100	550	300	1.0	4.0	10
ABR801	8.0	50	40	100	150	600	300	1.0	4.0	10
ABR802	8.0	50	80	200	250	700	300	1.0	4.0	10
ABR804	8.0	50	125	400	450	900	300	1.0	4.0	10
ABR806	8.0	50	250	600	700	1150	300	1.0	4.0	10
ABR808	8.0	50	380	800	900	1350	300	1.0	4.0	10
ABR810	8.0	50	440	1000	1100	1550	300	1.0	4.0	10
ABR1000 Series, 10 A, Case Type: BR10										
ABR1000	10	50	20	50	100	550	300	1.0	5.0	10
ABR1001	10	50	40	100	150	600	300	1.0	5.0	10
ABR1002	10	50	80	200	250	700	300	1.0	5.0	10
ABR1004	10	50	125	400	450	900	300	1.0	5.0	10
ABR1006	10	50	250	600	700	1150	300	1.0	5.0	10
ABR1008	10	50	380	800	900	1350	300	1.0	5.0	10
ABR1010	10	50	440	1000	1100	1550	300	1.0	5.0	10





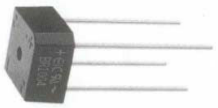

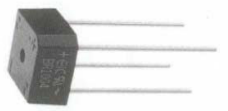

Avalanche Bridge Rectifiers

The plastic material carries U/L recognition 94V-0.

Type No.	Max. Average Forward Rectified Current		Input Voltage Recommended	Max. Recurrent Peak Reverse Voltage	Avalanche Breakdown Voltage at 100 mA		Max. Forward Peak Surge Current	Max. Forward Voltage Drop at Ta = 25°C		Max. Reverse Current at Ta = 25°C
	$I_{F(AV)}$ @	Tc		V_{RRM}	Min.	Max.	I_{FSM}	V_F @	I_F	I_R
	(A)	(°C)	(V)	(V)	(V)	(V)	(A)	(V)	(A)	(μA)
ABR1500 Series, 15 A, Case Type: BR50										
ABR1500	15	55	20	50	100	550	300	1.1	7.5	10
ABR1501	15	55	40	100	150	600	300	1.1	7.5	10
ABR1502	15	55	80	200	250	700	300	1.1	7.5	10
ABR1504	15	55	125	400	450	900	300	1.1	7.5	10
ABR1506	15	55	250	600	700	1150	300	1.1	7.5	10
ABR1508	15	55	380	800	900	1350	300	1.1	7.5	10
ABR1510	15	55	440	1000	1100	1550	300	1.1	7.5	10
* For wire leads use suffix "W" for Case Type : BR50W										
ABR2500 Series, 25 A, Case Type: BR50										
ABR2500	25	55	20	50	100	550	300	1.1	12.5	10
ABR2501	25	55	40	100	150	600	300	1.1	12.5	10
ABR2502	25	55	80	200	250	700	300	1.1	12.5	10
ABR2504	25	55	125	400	450	900	300	1.1	12.5	10
ABR2506	25	55	250	600	700	1150	300	1.1	12.5	10
ABR2508	25	55	380	800	900	1350	300	1.1	12.5	10
ABR2510	25	55	440	1000	1100	1550	300	1.1	12.5	10
* For wire leads use suffix "W" for Case Type : BR50W										
ABR3500 Series, 35 A, Case Type: BR50										
ABR3500	35	55	20	50	100	550	300	1.1	17.5	10
ABR3501	35	55	40	100	150	600	300	1.1	17.5	10
ABR3502	35	55	80	200	250	700	300	1.1	17.5	10
ABR3504	35	55	125	400	450	900	300	1.1	17.5	10
ABR3506	35	55	250	600	700	1150	300	1.1	17.5	10
ABR3508	35	55	380	800	900	1350	300	1.1	17.5	10
ABR3510	35	55	440	1000	1100	1550	300	1.1	17.5	10
* For wire leads use suffix "W" for Case Type : BR50W										
ABR5000 Series, 50 A, Case Type: BR50										
ABR5000	50	55	20	50	100	550	400	1.1	25	10
ABR5001	50	55	40	100	150	600	400	1.1	25	10
ABR5002	50	55	80	200	250	700	400	1.1	25	10
ABR5004	50	55	125	400	450	900	400	1.1	25	10
ABR5006	50	55	250	600	700	1150	400	1.1	25	10
ABR5008	50	55	380	800	900	1350	400	1.1	25	10
ABR5010	50	55	440	1000	1100	1550	400	1.1	25	10
* For wire leads use suffix "W" for Case Type : BR50W										



BR50

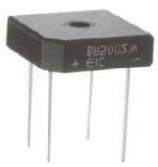

BR50W

Fast Recovery Bridge Rectifiers

The plastic material carries U/L recognition 94V-0.

Type No.	Maximum Average Forward Rectified Current		Input Voltage Recommended	Max. Repetitive Peak Forward Voltage	Max. Peak Forward Surge Current	Max. Forward Voltage Drop at Ta = 25°C		Max. Reverse Current at Ta = 25°C	Max. Reverse Recovery Time (1)
	$I_{F(AV)}$ @	Tc		V_{RRM}	I_{FSM}	V_F @	I_F	I_R	Trr
	(A)	(°C)	(V)	(V)	(A)	(V)	(A)	(μA)	(ns)
FKBL400 Series, 4 A, Case Type: KBL									
FKBL400	4.0	50	20	50	150	1.4	4.0	10	150
FKBL401	4.0	50	40	100	150	1.4	4.0	10	150
FKBL402	4.0	50	80	200	150	1.4	4.0	10	150
FKBL404	4.0	50	125	400	150	1.4	4.0	10	150
FKBL406	4.0	50	250	600	150	1.4	4.0	10	250
FKBL408	4.0	50	380	800	150	1.4	4.0	10	500
FKBL410	4.0	50	440	1000	150	1.4	4.0	10	500
FBR600 Series, 6 A, Case Type: BR6									
FBR600	6.0	50	20	50	150	1.3	3.0	10	150
FBR601	6.0	50	40	100	150	1.3	3.0	10	150
FBR602	6.0	50	80	200	150	1.3	3.0	10	150
FBR604	6.0	50	125	400	150	1.3	3.0	10	150
FBR606	6.0	50	250	600	150	1.3	3.0	10	250
FBR608	6.0	50	380	800	150	1.3	3.0	10	500
FBR610	6.0	50	440	1000	150	1.3	3.0	10	500
FKBP800 Series, 8 A, Case Type: BR10									
FBR800	8.0	50	20	50	200	1.3	4.0	10	150
FBR801	8.0	50	40	100	200	1.3	4.0	10	150
FBR802	8.0	50	80	200	200	1.3	4.0	10	150
FBR804	8.0	50	125	400	200	1.3	4.0	10	150
FBR806	8.0	50	250	600	200	1.3	4.0	10	250
FBR808	8.0	50	380	800	200	1.3	4.0	10	500
FBR810	8.0	50	440	1000	200	1.3	4.0	10	500
FBR1000 Series, 10 A, Case Type: BR10									
FBR1000	10	55	20	50	250	1.3	5.0	10	150
FBR1001	10	55	40	100	250	1.3	5.0	10	150
FBR1002	10	55	80	200	250	1.3	5.0	10	150
FBR1004	10	55	125	400	250	1.3	5.0	10	150
FBR1006	10	55	250	600	250	1.3	5.0	10	250
FBR1008	10	55	380	800	250	1.3	5.0	10	500
FBR1010	10	55	440	1000	250	1.3	5.0	10	500





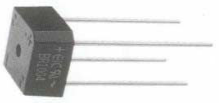

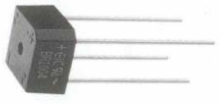

Note : (1) Reverse Recovery test conditions : I_F = 0.5 A, I_R = 1 A, Irr = 0.25 A

Fast Recovery Bridge Rectifiers

The plastic material carries U/L recognition 94V-0.

Type No.	Maximum Average Forward Rectified Current		Input Voltage Recommended	Max. Repetitive Peak Forward Voltage	Max. Peak Forward Surge Current	Max. Forward Voltage Drop at Ta = 25°C		Max. Reverse Current at Ta = 25°C	Max. Reverse Recovery Time (1)
	$I_{F(AV)}$ @	Tc		V_{RRM}	I_{FSM}	V_F @	I_F	I_R	Trr
	(A)	(°C)	(V)	(V)	(A)	(V)	(A)	(μA)	(ns)
FBR1500 Series, 15 A, Case Type: BR50									
FBR1500	15	55	20	50	300	1.3	7.5	10	150
FBR1501	15	55	40	100	300	1.3	7.5	10	150
FBR1502	15	55	80	200	300	1.3	7.5	10	150
FBR1504	15	55	125	400	300	1.3	7.5	10	150
FBR1506	15	55	250	600	300	1.3	7.5	10	250
FBR1508	15	55	380	800	300	1.3	7.5	10	500
FBR1510	15	55	440	1000	300	1.3	7.5	10	500
* For wire leads use suffix "W" for Case Type : BR50W									
FBR2500 Series, 25 A, Case Type: BR50									
FBR2500	25	55	20	50	300	1.3	12.5	10	150
FBR2501	25	55	40	100	300	1.3	12.5	10	150
FBR2502	25	55	80	200	300	1.3	12.5	10	150
FBR2504	25	55	125	400	300	1.3	12.5	10	150
FBR2506	25	55	250	600	300	1.3	12.5	10	250
FBR2508	25	55	380	800	300	1.3	12.5	10	500
FBR2510	25	55	440	1000	300	1.3	12.5	10	500
* For wire leads use suffix "W" for Case Type : BR50W									
FBR3500 Series, 35 A, Case Type: BR50									
FBR3500	35	55	20	50	400	1.3	17.5	10	150
FBR3501	35	55	40	100	400	1.3	17.5	10	150
FBR3502	35	55	80	200	400	1.3	17.5	10	150
FBR3504	35	55	125	400	400	1.3	17.5	10	150
FBR3506	35	55	250	600	400	1.3	17.5	10	250
FBR3508	35	55	380	800	400	1.3	17.5	10	500
FBR3510	35	55	440	1000	400	1.3	17.5	10	500
* For wire leads use suffix "W" for Case Type : BR50W									
FBR5000 Series, 50 A, Case Type: BR50									
FBR5000	50	55	20	50	400	1.3	25	10	150
FBR5001	50	55	40	100	400	1.3	25	10	150
FBR5002	50	55	80	200	400	1.3	25	10	150
FBR5004	50	55	125	400	400	1.3	25	10	150
FBR5006	50	55	250	600	400	1.3	25	10	250
FBR5008	50	55	380	800	400	1.3	25	10	500
FBR5010	50	55	440	1000	400	1.3	25	10	500
* For wire leads use suffix "W" for Case Type : BR50W									

Note : (1) Reverse Recovery test conditions : I_F = 0.5 A, I_R = 1 A, Irr = 0.25 A



BR50



BR50W

Bi - Directional trigger - DIACS

The plastic material carries U/L recognition 94V-0.

Type No.	Breakdown Voltage			Breakover Voltage Symmetry	Dynamic Breakback Voltage	Breakover Current	Peak Pulse Current for 10 μs 120 PPS Ta < 40 °C
	$V_{(BR)1}$ and $V_{(BR)2}$			$[V_{(BR)1}] - [V_{(BR)2}]$	$\lvert \Delta V \pm \rvert$	$I_{(BR)1}$ and $I_{(BR)2}$	I_{TRM}
	V(Min.)	V(Typ.)	V(Max.)	V(Max)	V(Min.)	μA(Max.)	A(Max.)

D32P Series, Case Type: DO-41



D32P	27	32	37	3.0	5.0	100	2.0
D35P	30	35	40	3.0	5.0	100	2.0
D40P	35	40	45	3.0	5.0	100	2.0
D50P	42	50	58	4.0	8.0	100	1.6
D60P	56	60	70	4.0	10.0	100	1.6

DB3 & DB4, Case Type: DO-35



DB3	28	32	36	3.8	5.0	200	2.0
DB4	35	40	45	3.8	5.0	200	2.0

Thyristor - SIDAC

The plastic material carries U/L recognition 94V-0.

Type No.	Repetitive Peak Off-State Voltage	Breakover Voltage (60 Hz Sine Wave)		On-State RMS Current Conduction Angle of 360°	Peak Surge (Non-Repetitive) On-State Current One-cycle@ 60 Hz	Repetitive Peak Off-State Current @ 60Hz, $V=V_{DRM}$	Dynamic Holding Current R=0.1 KΩ ,60Hz	Breakover Current 60 Hz Sine Wave
	V_{DRM}	$V_{BO(Min.)}$	$V_{BO(Max.)}$	$I_{T(RMS)}$	I_{TSM}	I_{DRM}	I_{HO}	I_{BO}
	(V)	(V)	(V)	(A)	(A)	(μA)	(mA)	(μA)

ET013 Series, Case Type: DO-41



ET013	± 90	120	138	0.6	20	10	100	200
ET015	± 115	142	157	0.6	20	10	100	200
ET020	± 170	190	200	0.6	20	10	100	200

G105 Series, Case Type: DO-41



G105*	± 90	95	113	1.0	20	10	100	200
G120*	± 90	110	125	1.0	20	10	100	200
G130	± 90	120	135	1.0	20	10	100	200
G220*	± 180	205	230	1.0	20	10	100	200
G240*	± 180	220	250	1.0	20	10	100	200
G260	± 180	240	270	1.0	20	10	100	200
G270*	± 180	250	280	1.0	20	10	100	200

* Also available in Axial D2A Case Types. Use suffix "C" to order(e.g. G105C, G120C,...).

Packaging Information

Case Type	Packaging	Quantity per Box. (Pcs.)	Package size [mm. (inches)]	Quantity per carton (Pcs.)	Net weight per carton (Kgs.)	Gross weight per carton (Kgs.)	Carton size [mm. (inches)]
R-1	BAG(200 Pcs)	6,000	72x255x135 (2.83x10.04x5.32)	30,000	7.42	8.35	260x370x150 (10.24x14.57x5.90)
	TAPE & AMMO (26 mm)	3,000	45x255x78 (1.77x10.04x3.07)	39,000	5.30	7.30	260x370x150 (10.24x14.57x5.90)
	TAPE & AMMO(52 mm)	5,000	72x255x135 (2.83x10.04x5.32)	25,000	5.00	6.20	260x370x150 (10.24x14.57x5.90)
M1A	BAG(300 Pcs)	7,500	72x255x135 (2.83x10.04x5.32)	37,500	7.75	8.16	260x370x150 (10.24x14.57x5.90)
	TAPE&AMMO (26 mm)	4,000	45x255x78 (1.77x10.04x3.07)	52,000	10.24	12.80	260x370x150 (10.24x14.57x5.90)
	TAPE&AMMO (52 mm)	5,000	72x255x135 (2.83x10.04x5.32)	25,000	5.55	6.00	260x370x150 (10.24x14.57x5.90)
DO-34 (Glass)	BULK	2,000	205x90x21 (8.07x3.54x0.82)	100,000	9.30	11.75	215x450x240 (8.46x17.71x9.45)
	TAPE & REEL	10,000	ϕ 330x81 (ϕ 12.992x3.189)	40,000	3.72	6.45	340x340x330 (13.39x13.39x12.99)
	TAPE & AMMO (26 mm)	5,000	45x255x78 (1.77x10.04x3.07)	65,000	5.30	6.30	260x370x150 (10.24x14.57x5.90)
	TAPE & AMMO (52 mm)	10,000	72x255x135 (2.83x10.04x5.32)	50,000	4.65	6.05	260x370x150 (10.24x14.57x5.90)
	BAG(500Pcs) & BULK	5,000	115x155x45 (4.53x6.10x1.78)	100,000	9.30	11.00	250x325x240 (9.84x12.80x9.45)
DO-35 (Glass)	BULK	2,000	205x90x21 (8.07x3.54x0.82)	100,000	12.70	15.10	215x450x240 (8.46x17.71x9.45)
	TAPE & REEL	10,000	ϕ 330x81 (ϕ 12.992x3.189)	40,000	5.08	7.80	340x340x325 (13.39x13.39x12.79)
	TAPE & AMMO (26 mm)	5,000	45x255x78 (1.77x10.04x3.07)	65,000	6.20	8.00	260x370x150 (10.24x14.57x5.90)
	TAPE & AMMO (52 mm)	10,000	72x255x135 (2.83x10.04x5.32)	50,000	6.35	7.75	260x370x150 (10.24x14.57x5.90)
	BAG(500Pcs) & BULK	5,000	92x170x50 (3.62x6.69x1.97)	100,000	12.70	14.60	185x395x285 (7.28x15.55x11.22)
DO-41 (Glass)	TAPE & REEL	5,000	ϕ 330x81 (ϕ 12.992x3.189)	20,000	5.10	7.30	340x340x325 (13.39x13.39x12.79)
	TAPE & AMMO (26 mm)	2,500	45x255x78 (1.77x10.04x3.07)	32,500	6.40	8.00	260x370x150 (10.24x14.57x5.90)
	TAPE & AMMO (52 mm)	5,000	72x255x135 (2.83x10.04x5.32)	25,000	6.38	7.45	260x370x150 (10.24x14.57x5.90)
	BAG(250Pcs) & BULK	2,500	92x170x50 (4.62x6.69x1.97)	50,000	12.75	14.65	250x325x240 (9.84x12.80x9.45)

Packaging Information

Case Type	Packaging	Quantity per Box. (Pcs.)	Package size [mm. (inches)]	Quantity per carton (Pcs.)	Net weight per carton (Kgs.)	Gross weight per carton (Kgs.)	Carton size [mm. (inches)]
DO-41	BAG(200Pcs)	5,000	72x255x135 (2.83x10.04x5.32)	25,000	8.38	9.30	260x370x150 (10.24x14.57x5.90)
	TAPE & REEL	5,000	ϕ 330x81 (ϕ 12.992x3.189)	20,000	6.70	9.20	340x340x325 (13.39x13.39x12.78)
	TAPE & AMMO (26 mm)	2,000	45x255x78 (1.77x10.04x3.07)	26,000	5.90	7.00	260x370x150 (10.24x14.57x5.90)
	TAPE & AMMO (52 mm)	4,000	72x255x135 (2.83x10.04x5.32)	20,000	6.70	7.70	260x370x150 (10.24x14.57x5.90)
	TAPE & AMMO 120	3,000	72x255x120 (2.83x10.04x4.72)	15,000	5.03	6.00	260x370x140 (10.24x14.57x5.51)
DO-15	BAG(100Pcs)	3,000	72x255x135 (2.83x10.04x5.32)	15,000	6.00	6.90	260x370x150 (10.24x14.57x5.90)
	TAPE & REEL	3,000	ϕ 330x81 (ϕ 12.992x3.189)	12,000	4.86	6.97	340x340x325 (13.39x13.39x12.80)
	TAPE & AMMO	3,000	72x255x135 (2.83x10.04x5.32)	15,000	6.00	7.00	260x370x150 (10.24x14.57x5.90)
	TAPE & AMMO 120	2,500	72x255x120 (2.83x10.04x4.72)	12,500	5.00	6.00	260x370x140 (10.24x14.57x5.51)
D2	BAG(100Pcs)	2,500	72x255x135 (2.83x10.04x5.32)	12,500	5.88	6.85	260x370x150 (10.24x14.57x5.90)
	TAPE & REEL	3,000	ϕ 330x81 (ϕ 12.992x3.189)	12,000	5.64	7.75	340x340x325 (13.39x13.39x12.80)
	TAPE & AMMO	2,000	72x255x135 (2.83x10.04x5.32)	10,000	4.70	5.65	260x370x150 (10.24x14.57x5.90)
	TAPE & AMMO 120	1,500	72x255x120 (2.83x10.04x4.72)	7,500	3.53	4.40	260x370x140 (10.24x14.57x5.51)
	TAPE & AMMO (26mm)	1,000	45x255x78 (1.77x10.04x3.07)	13,000	4.72	5.95	260x370x150 (10.24x14.57x5.90)
D2A	BAG (100Pcs)	2,500	72x255x135 (2.83x10.04x5.32)	12,500	7.98	8.95	260x370x150 (10.24x14.57x5.90)
	TAPE & REEL	3,000	ϕ 330x81 (ϕ 12.992x3.189)	12,000	7.66	9.75	340x340x325 (13.39x13.39x12.80)
	TAPE & AMMO(52 mm)	2,000	72x255x135 (2.83x10.04x5.32)	10,000	6.38	7.30	260x370x150 (10.24x14.57x5.90)
DO-201	BAG (50Pcs)	1,500	72x255x135 (2.83x10.04x5.32)	7,500	6.98	8.00	260x370x150 (10.24x14.57x5.90)
	TAPE & REEL	1,250	ϕ 330x81 (ϕ 12.992x3.189)	5,000	4.65	6.70	340x340x325 (13.39x13.39x12.80)
	TAPE & AMMO	1,000	72x255x135 (2.83x10.04x5.32)	5,000	4.65	5.60	260x370x150 (10.24x14.57x5.90)

Packaging Information

Case Type	Packaging	Quantity per Box. (Pcs.)	Package size [mm. (inches)]	Quantity per carton (Pcs.)	Net weight per carton (Kgs.)	Gross weight per carton (Kgs.)	Carton size [mm. (inches)]
DO-201AD	BAG(50Pcs)	1,500	72x255x135 (2.83x10.04x5.32)	7,500	8.61	9.60	260x370x150 (10.24x14.57x5.90)
	TAPE & REEL	1,250	ϕ 330x81 (ϕ 12.992x3.189)	5,000	5.74	7.80	340x340x325 (13.39x13.39x12.80)
	TAPE & AMMO	1,000	72x255x135 (2.83x10.04x5.32)	5,000	5.74	6.70	260x370x150 (10.24x14.57x5.90)
D6	BAG(20Pcs)	600	72x255x135 (2.83x10.04x5.32)	3,000	6.70	7.11	260x370x150 (10.24x14.57x5.90)
	TAPE & REEL	800	ϕ 330x81 (ϕ 12.992x3.189)	3,200	6.56	8.45	340x340x325 (13.39x13.39x12.80)
MiniMELF	REEL	3,000	ϕ 178x14.4 (ϕ 7.008x0.567)	120,000	3.72	6.90	215x405x265 (8.46x15.95x10.43)
	REEL	10,000	ϕ 330x14.4 (ϕ 12.992x0.567)	50,000	1.55	3.67	340x340x100 (13.39x13.39x3.94)
MELF	REEL	5,000	ϕ 330x14.4 (ϕ 12.992x0.567)	25,000	3.35	5.39	340x340x100 (13.39x13.39x3.94)
SMA(DO-214AC)	REEL	5,000	ϕ 330x18.4 (ϕ 12.992x0.724)	25,000	1.68	3.71	340x340x100 (13.39x13.39x3.94)
SMB(DO-214AA)	REEL	3,000	ϕ 330x18.4 (ϕ 12.992x0.724)	15,000	1.76	3.94	340x340x100 (13.39x13.39x3.94)
SMC(DO-214AB)	REEL	2,500	ϕ 330x22.4 (ϕ 12.992x0.882)	10,000	2.51	4.34	340x340x100 (13.39x13.39x3.94)
DO-215AC	REEL	3,000	ϕ 330x18.4 (ϕ 12.992x0.724)	15,000	1.28	3.56	340x340x100 (13.39x13.39x3.94)
DFS	REEL	1,500	ϕ 330x22.4 (ϕ 12.992x0.882)	7,500	2.85	4.45	340x340x100 (13.39x13.39x3.94)
MBS	REEL	3,000	ϕ 330x22.4 (ϕ 12.992x0.882)	15,000	1.92	3.00	340x340x100 (13.39x13.39x3.94)

Packaging Information

Case Type	Quantity per box (Pcs.)	Box size [mm. (inches)]	Quantity per carton (Pcs.)	Net weight per carton (Kgs.)	Gross weight per carton (Kgs.)	Carton size [mm. (inches)]
DFM	50	440 Length (17.4 Length)	Plastic Tubes			
MBM	100	70x250x135 (2.75x9.84x5.31)	Plastic Tubes			
WOB	500	200x200x47 (7.87x7.87x1.85)	5,000	6.26	8.00	215x405x265 (8.46x15.95x10.43)
KBP	100	90x170x52 (3.54x6.69x1.97)	2,000	6.52	8.80	185x395x285 (7.28x15.55x11.22)
KBU	100	90x170x52 (3.54x6.69x1.97)	2,000	16.00	18.28	185x395x285 (7.28x15.55x11.22)
KBL	100	90x170x52 (3.54x6.69x1.97)	2,000	10.58	12.86	185x395x285 (7.28x15.55x11.22)
GBU	160	115x115x45 (4.53x6.10x1.77)	3,200	11.51	13.30	250x325x240 (4.53x6.10x1.77)
BR6	200	160x210x38 (6.30x8.27x1.50)	2,000	6.52	7.95	215x345x225 (8.46x13.58x8.86)
BR10	200	200x200x47 (7.87x7.87x1.85)	2,000	11.45	13.20	215x405x265 (8.46x15.95x10.43)
BR50	50	155x165x30 (6.10x6.50x1.18)	1,000	16.55	18.65	180x330x345 (7.09x12.99x13.58)
BR50W	40	155x165x30 (6.10x6.50x1.18)	800	12.52	14.60	180x330x345 (7.09x12.99x13.58)
BR50M	50	155x165x30 (6.10x6.50x1.18)	900	27.60	29.30	180x330x345 (7.09x12.99x13.58)
RBV4	120	115x155x45 (4.53x6.10x1.77)	2,400	10.27	12.10	250x325x240 (9.84x12.80x9.45)
RBV25 (6A)	100	115x155x45 (4.53x6.10x1.77)	2,000	15.60	17.40	250x325x240 (9.84x12.80x9.45)
RBV25 (8A-10A)	100	115x155x45 (4.53x6.10x1.77)	2,000	15.94	17.75	250x325x240 (9.84x12.80x9.45)
RBV25 (15A)	100	115x155x45 (4.53x6.10x1.77)	2,000	16.22	18.05	250x325x240 (9.84x12.80x9.45)
RBV25 (25A-50A)	100	115x155x45 (4.53x6.10x1.77)	2,000	16.31	18.15	250x325x240 (9.84x12.80x9.45)
CELL 3A	10,000	Bottle ϕ 70x120 (ϕ 2.76x4.72)	100,000	9.20	10.00	260x370x150 (10.24x14.57x5.90)
CELL 5A	10,000	Bottle ϕ 70x120 (ϕ 2.76x4.72)	100,000	15.40	16.20	260x370x150 (10.24x14.57x5.90)
CELL 8A	5,000	Bottle ϕ 70x120 (ϕ 2.76x4.72)	50,000	9.75	10.55	260x370x150 (10.24x14.57x5.90)
CELL 18A	5,000	Bottle ϕ 70x120 (ϕ 2.76x4.72)	50,000	12.15	12.95	260x370x150 (10.24x14.57x5.90)
CELL 25A	5,000	Bottle ϕ 70x120 (ϕ 2.76x4.72)	50,000	12.55	13.35	260x370x150 (10.24x14.57x5.90)

Packaging Information

Case Type	Quantity per box (Pcs.)	Box size [mm. (inches)]	Quantity per carton (Pcs.)	Net weight per carton (Kgs.)	Gross weight per carton (Kgs.)	Carton size [mm. (inches)]
5R	400	115x115x45 (4.53x6.10x1.77)	8,000	9.28	10.90	250x325x240 (9.84x12.80x9.45)
BUTTON CASE	2,000	72x255x120 (2.83x10.04x4.72)	10,000	18.18	19.00	260x370x140 (10.24x14.57x5.51)
MR	2,000	72x255x120 (2.83x10.04x4.72)	10,000	16.01	16.80	260x370x140 (10.24x14.57x5.51)
AR-L	200	305x84x41 (12.0x3.30x1.61)	6,000	16.39	19.04	310x420x255 (12.20x16.54x10.04)
MR-L	200	305x84x41 (12.0x3.30x1.61)	6,000	15.31	17.83	310x420x255 (12.20x16.54x10.04)
D2PAK	50	Tube 32x520x6 (1.23x20.52x0.24)	1,000	1.44	2.30	140x540x85 (5.51x21.26x3.35)
TO-220AB, AC	50	Tube 32x520x6 (1.23x20.52x0.24)	1,000	1.95	2.81	140x540x85 (5.51x21.26x3.35)
	500	160x210x38 (6.50x8.27x1.50)	5,000	9.39	10.80	250x325x240 (9.84x12.80x9.45)
ITO-220AB, AC	50	Tube 32x520x6 (1.23x20.52x0.24)	1,000	1.75	2.60	140x540x85 (5.51x21.26x3.35)
	500	160x210x38 (6.50x8.27x1.50)	5,000	8.75	10.15	250x325x240 (9.84x12.80x9.45)
TO-247AD	120	90x170x52 (3.54x6.69x1.97)	2,400	15.08	17.35	185x395x285 (7.28x15.55x11.22)

NEW PACKAGING (SURFACE MOUNT DIODES)

Package	Tape Width	Package size		Reel Size		Quantity per box
	(mm)	(mm)	(inch)	(mm)	(inch)	(Pcs.)
SOT-23	8	4.0 ± 0.1	0.157 ± 0.004	178	7	3,000
SOD-123FL	8	4.0 ± 0.1	0.157 ± 0.004	178	7	2,500
SOD-123	8	4.0 ± 0.1	0.157 ± 0.004	178	7	3,000
SOD-323	8	4.0 ± 0.1	0.157 ± 0.004	178	7	3,000
SOD-523	8	4.0 ± 0.1	0.157 ± 0.004	178	7	4,000

Packaging Information

TYPE DIMENSIONS (AXIAL LEAD DIODES)

CASE TYPE (Outline)	Type Dimensions			
	S	Δ s	b	G
DO-34, DO-35, DO-41 (Glass), DO-41, DO-15 R-1, M1A, D2, D2A	5 ± 0.5 (0.196 ± 0.0196)	1.2(0.047)	6 ± 1.05 (0.236 ± 0.039)	52 ± 1.50 (2.047 ± 0.059)
DO-34, DO-35, DO-41 (Glass), DO-41, DO-15 R-1, M1A, D2, D2A	5 ± 0.5 (0.196 ± 0.0196)	1.2(0.047)	6 ± 1.05 (0.236 ± 0.039)	26 ± 1.0 (1.023 ± 0.039)
DO-201, DO-201AD, D6	10 ± 0.5 (0.393 ± 0.0196)	1.2(0.047)	6 ± 1.05 (0.236 ± 0.039)	52 ± 1.50 (2.047 ± 0.059)

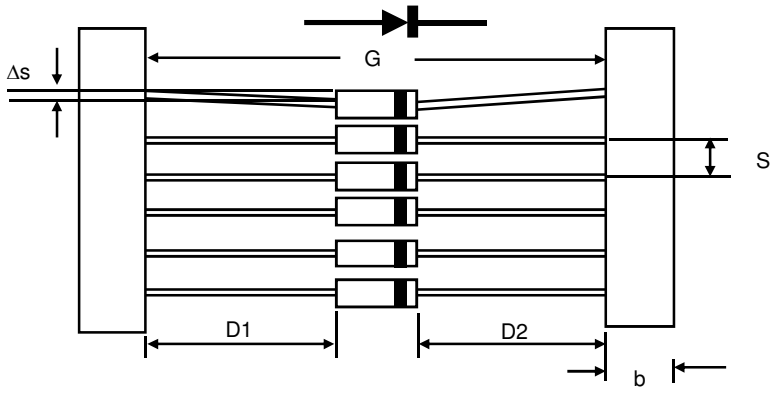

|D1 — D2| = 1.4 (0.055) max.

Packaging Information

AMMOPACK PACKAGING (AXIAL LEAD DIODES)

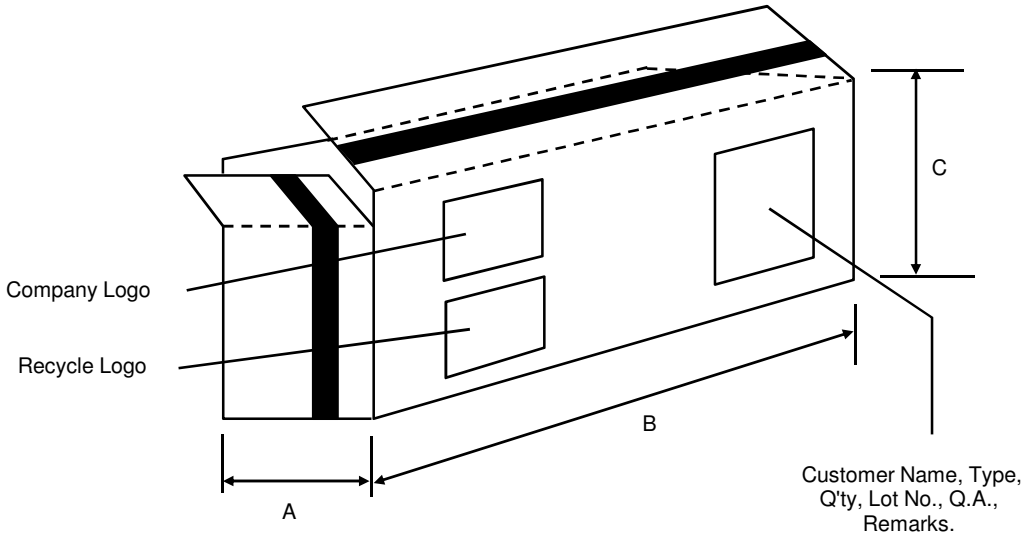

Packaging	Type Dimensions [mm. (inches)]		
	Dimension "A"	Dimension "B"	Dimension "C"
26mm Horizontal	45 ± 2.0 (1.771 ± 0.079)	255 ± 2.0 (10.039 ± 0.079)	78 ± 2.0 (3.070 ± 0.079)
52mm Horizontal	72 ± 2.0 (2.834 ± 0.079)	255 ± 2.0 (10.039 ± 0.079)	135 ± 2.0 (5.314 ± 0.079)

REEL PACKAGING (AXIAL LEAD DIODES)

DIMENSIONS IN mm. (inches)

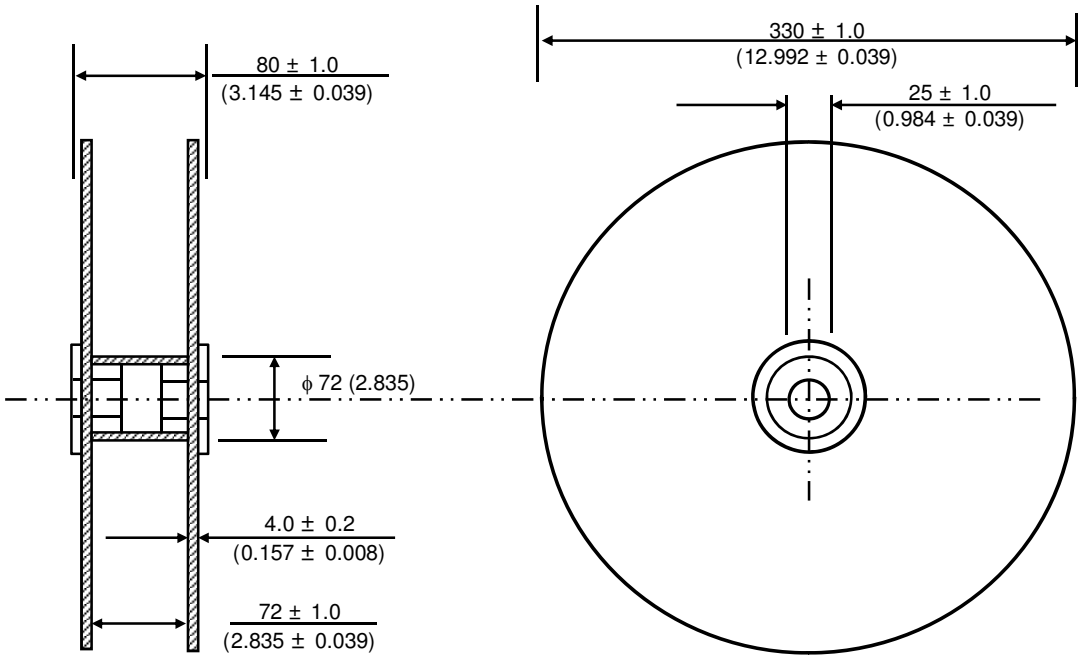

Packaging Information

SURFACE MOUNT TAPE AND REEL PACKAGING

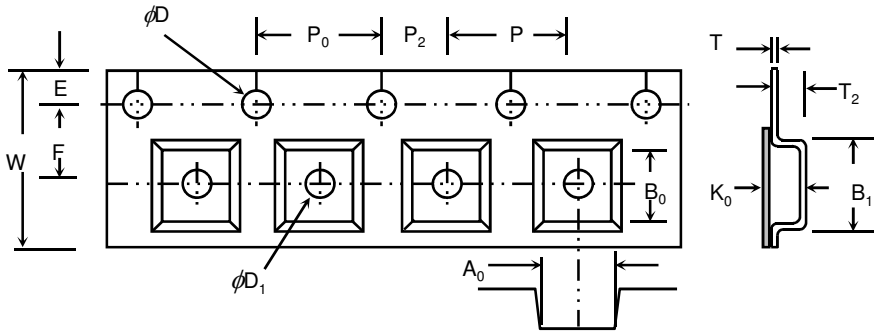

DIMENSIONS IN mm. (inches)

	Tape Size	D	E	P_0	T Max.	A_0, B_0, K_0	P_2
	8, 12, 16mm.	1.50 ± 0.10 (0.059 ± 0.004)	1.75 ± 0.1 (0.069 ± 0.004)	4.00 ± 0.1 (0.157 ± 0.004)	0.600 (0.024)	See Note 1	2.00 ± 0.05 (0.079 ± 0.002)

Case Type	Tape Size	W	P	B_1 Max.	F	T_2 Max.	D_1
MiniMELF, SOD-123FL, SOD-123, SOD-323, SOD-523, SOT-23	8mm.	8.00 ± 0.3 (0.314 ± 0.012)	4.00 ± 0.1 (0.157 ± 0.004)	4.2(0.165)	3.50 ± 0.05 (0.137 ± 0.002)	2.4(0.094)	1.00 ± 0.10 (0.039 ± 0.004)
MELF	12mm.	12.00 ± 0.3 (0.472 ± 0.012)	4.00 ± 0.1 (0.157 ± 0.004)	8.2(0.323)	5.50 ± 0.05 (0.217 ± 0.002)	4.5(0.177)	1.50 ± 0.25 (0.059 ± 0.001)
SMA	12mm.	12.00 ± 0.3 (0.472 ± 0.012)	4.00 ± 0.1 (0.157 ± 0.004)		5.50 ± 0.05 (0.217 ± 0.002)	2.54 ± 0.10 (0.100 ± 0.004)	1.50 ± 0.25 (0.059 ± 0.001)
SMB	12mm.	12.00 ± 0.3 (0.472 ± 0.012)	8.00 ± 0.1 (0.315 ± 0.004)		5.50 ± 0.05 (0.217 ± 0.002)	2.67 ± 0.10 (0.105 ± 0.004)	1.50 ± 0.25 (0.059 ± 0.001)
SMC	16mm.	16.00 ± 0.3 (0.629 ± 0.012)	8.00 ± 0.1 (0.315 ± 0.004)	12.1(0.476)	7.50 ± 0.1 (0.295 ± 0.004)	2.54 ± 0.10 (0.100 ± 0.004)	1.50 ± 0.25 (0.059 ± 0.001)
MBS	16mm.	16.00 ± 0.3 (0.629 ± 0.012)	8.00 ± 0.1 (0.315 ± 0.004)		7.50 ± 0.1 (0.295 ± 0.004)	2.54 ± 0.10 (0.100 ± 0.004)	1.50 ± 0.25 (0.059 ± 0.001)
DFS	16mm.	16.00 ± 0.3 (0.629 ± 0.012)	12.00 ± 0.1 (0.473 ± 0.004)		7.50 ± 0.1 (0.295 ± 0.004)	3.8 ± 0.10 (0.150 ± 0.004)	1.50 ± 0.25 (0.059 ± 0.001)

Note:

1. Ao, Bo, and Ko are determined by the maximum dimensions of the component size. The clearance between the component and the cavity must be within 0.05 mm (0.002") min. to 0.5 mm (0.02") max. for 8mm tape and 12mm tape and 0.15mm(0.006") min. to 0.90 mm (0.035") max. for 16 mm. tape.

Packaging Information

REEL PACKAGING (SURFACE MOUNT DIODES)

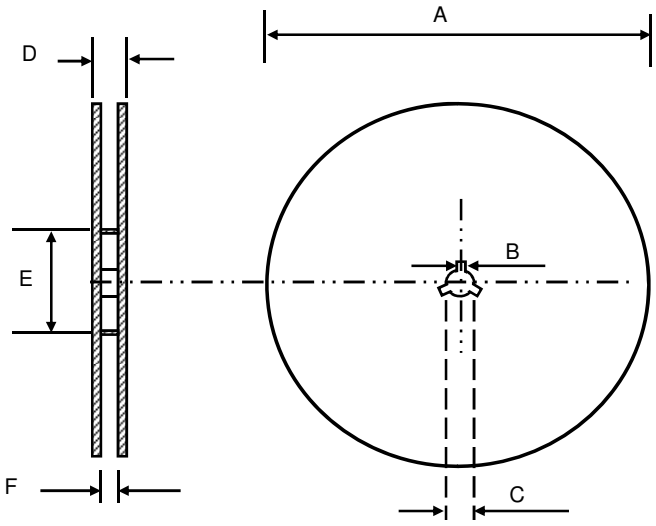

DIMENSIONS IN mm. (inches)

Tape Size	A max.	B max.	C	D max.	E min.	F max.
8 mm	178 ± 2.0 (7.0 ± 0.079) 330 ± 2.0 (13 ± 0.079)	2.5 (0.098)	13.0 ± 2.0 (0.51 ± 0.079)	14.4 (0.567)	100 (3.94)	9.9 (0.389)
12 mm	330 ± 2.0 (13 ± 0.079)	2.5 (0.098)	13.0 ± 2.0 (0.51 ± 0.079)	18.4 (0.724)	100 (3.94)	14.4 (0.567)
16 mm	330 ± 2.0 (13 ± 0.079)	2.5 (0.098)	13.0 ± 2.0 (0.51 ± 0.079)	22.4 (0.802)	100 (3.94)	18.4 (0.724)

Package Outline

Dimension in inches and (millimeters)

Mini MELF(LL-34)

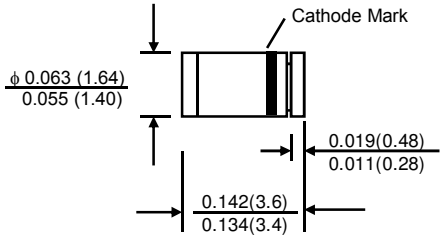

MELF(LL-41)

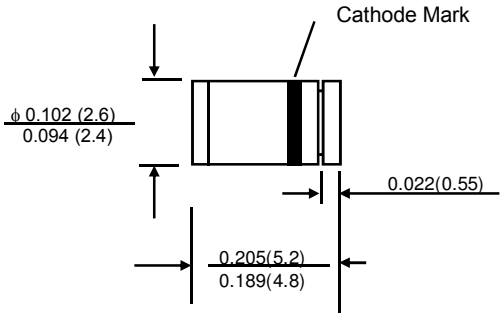

Mini MELF (Plastic)

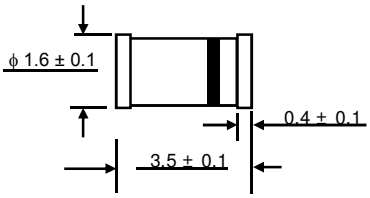

Dimensions in millimeters

MELF (Plastic)

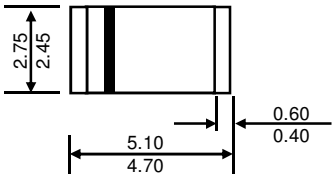

Dimensions in millimeters

SOT-23

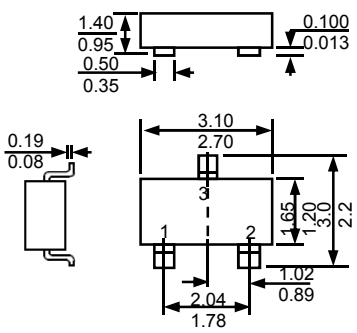

Dimensions in millimeters

SOD-123FL

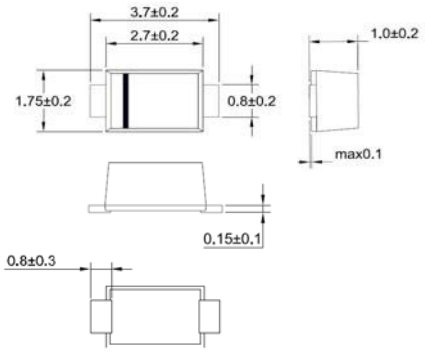

Dimensions in millimeters

Package Outline

Dimension in inches and (millimeters)

SOD-123

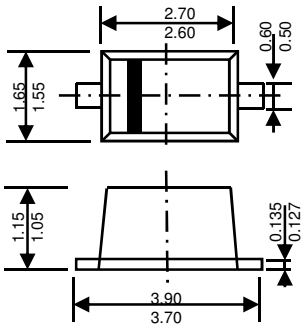

Dimensions in millimeters

SOD-323

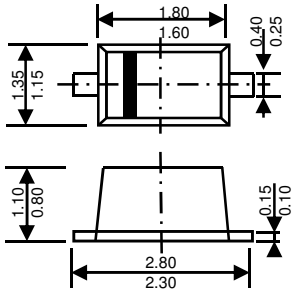

Dimensions in millimeters

SOD-523

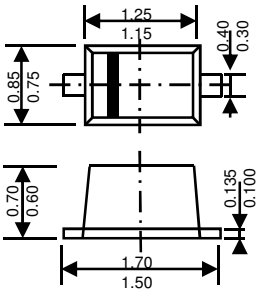

Dimensions in millimeters

DO-215AC

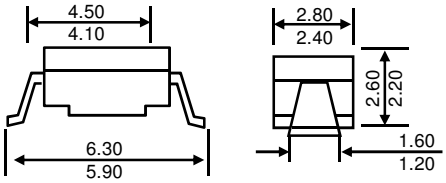

Dimensions in millimeters

SMA

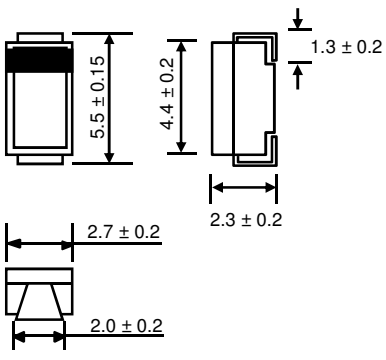

Dimensions in millimeters

SMA(DO-214AC)

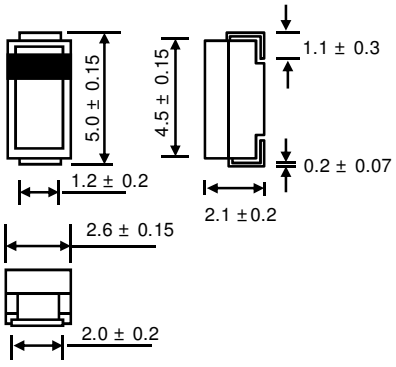

Dimensions in millimeters

Package Outline

Dimension in inches and (millimeters)

SMB(DO-214AA)

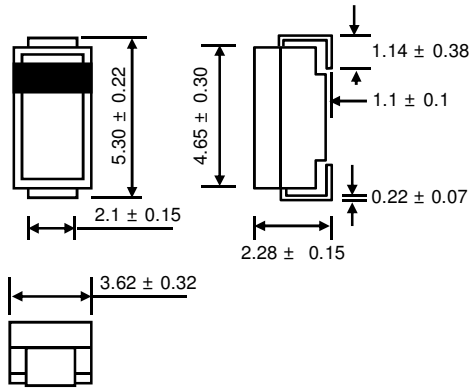

Dimensions in millimeters

SMC(DO-214AB)

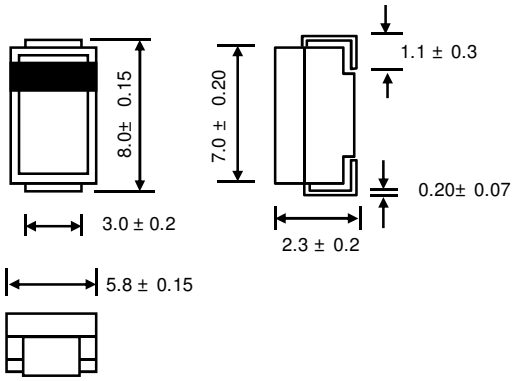

Dimensions in millimeters

DO-34

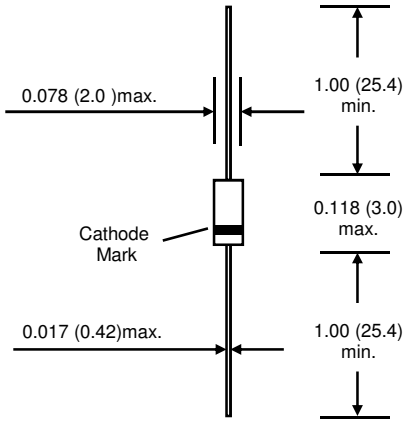

DO-35

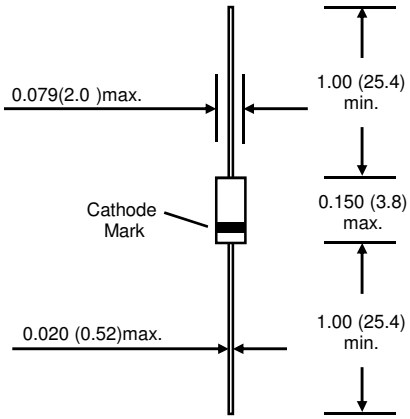

DO-41(Glass)

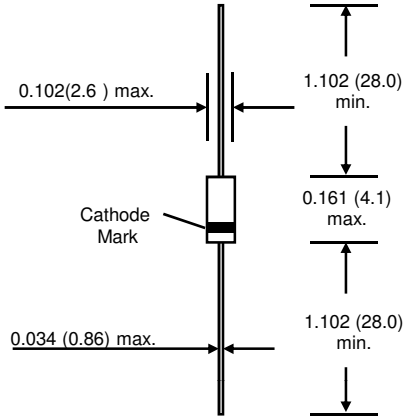

R-1

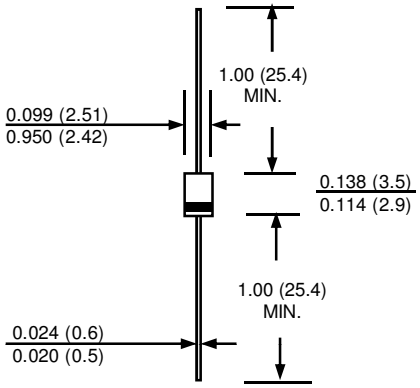

Package Outline

Dimension in inches and (millimeters)

M1A

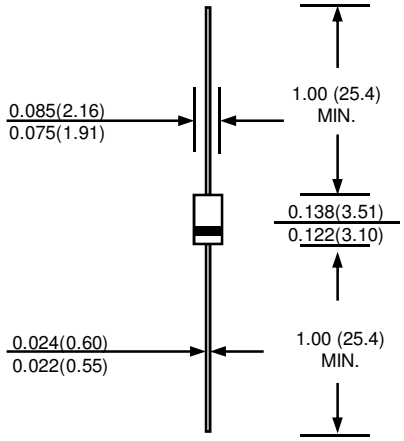

DO-41

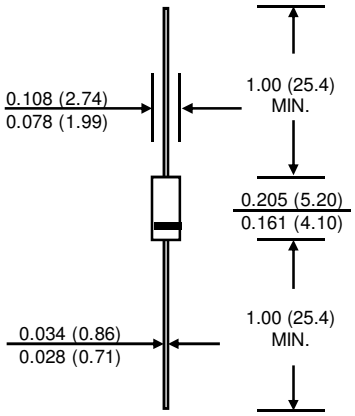

DO-15

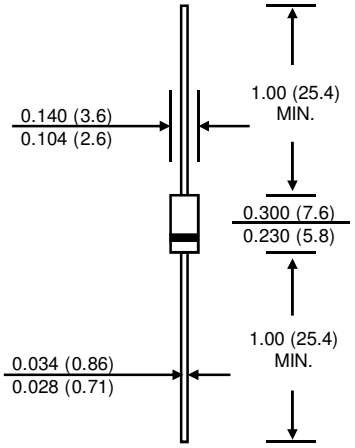

D2

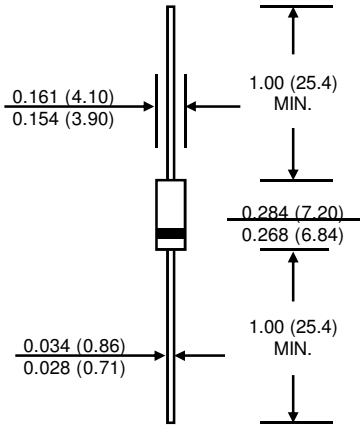

D2A

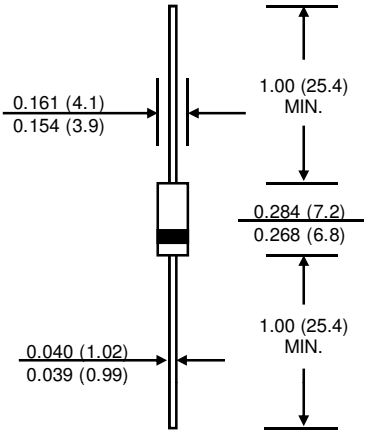

DO-201

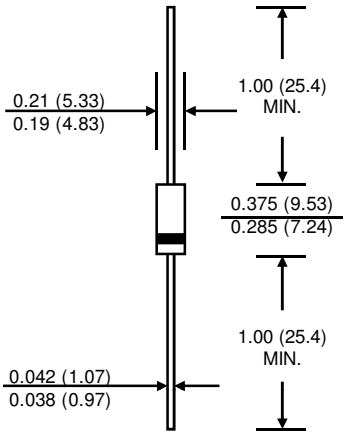

Package Outline

Dimension in inches and (millimeters)

DO-201AD

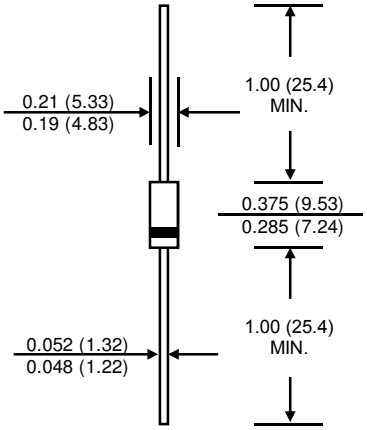

D6

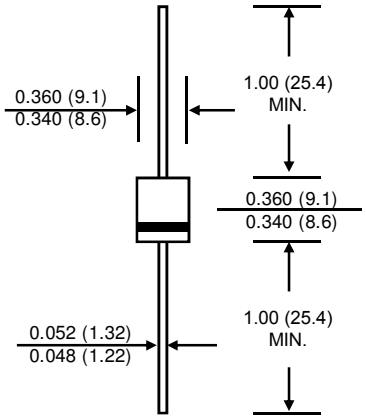

BUTTON CASE (AR)

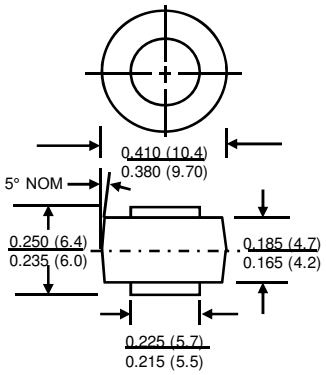

MR

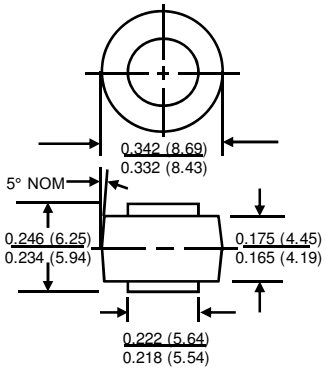

CELL

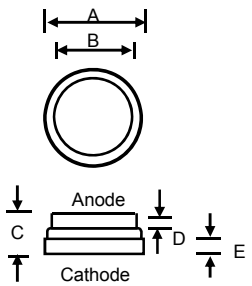

DIM.	MILLIMETER				
	3A	**5A**	**8A**	**18A**	**25A**
A	3.94	4.82	5.47	6.20	6.20
B	3.18	3.94	4.82	5.47	5.47
C	1.30	1.40	1.27	1.30	1.30
D	0.51	0.51	0.51	0.51	0.51
E	0.38	0.38	0.38	0.38	0.38

D^2PAK

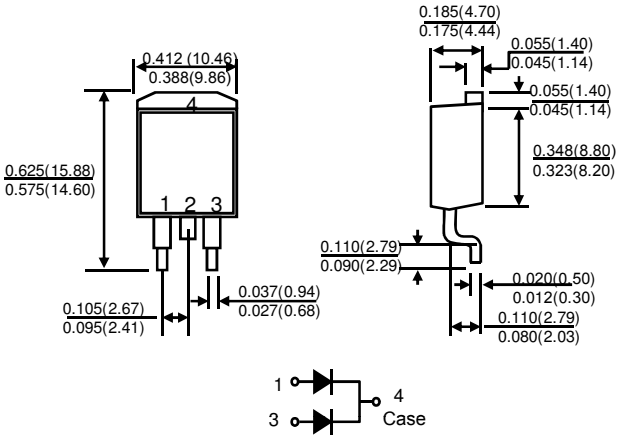

Package Outline

Dimension in inches and (millimeters)

DFS

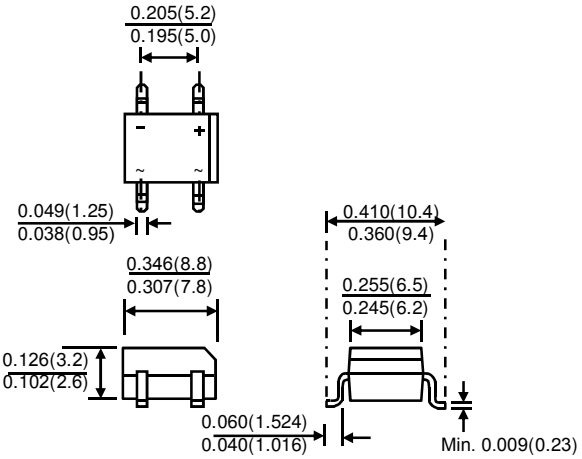

DFM

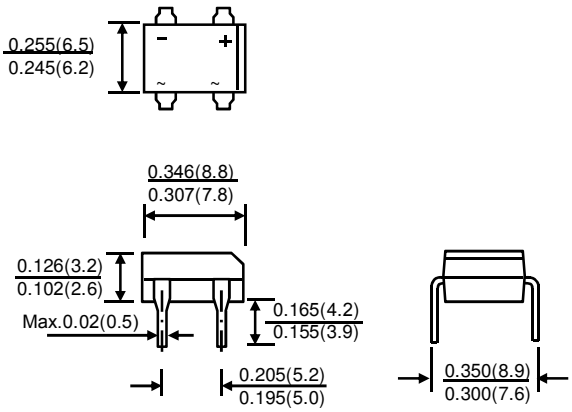

MBS

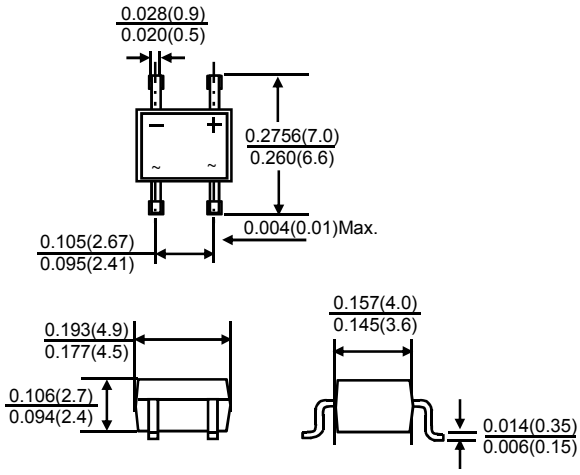

MBM

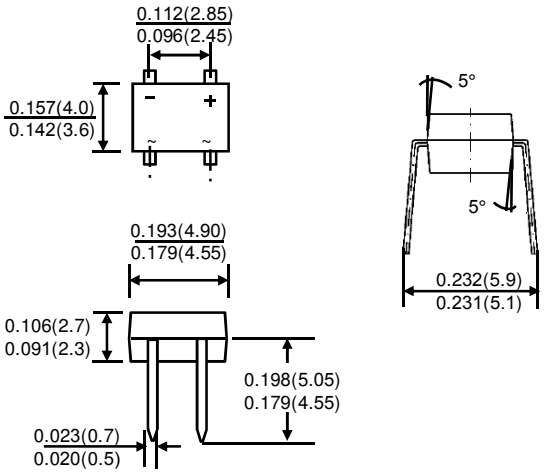

5R

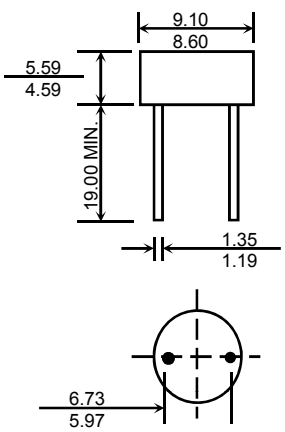

WOB

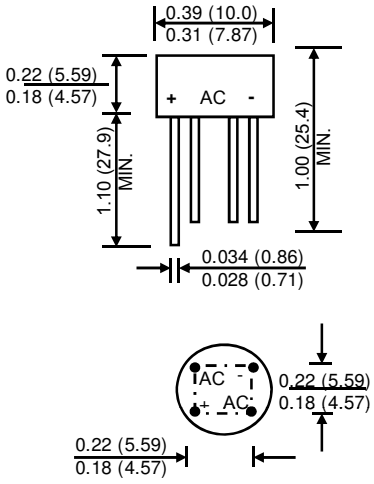

Package Outline

Dimension in inches and (millimeters)

KBL

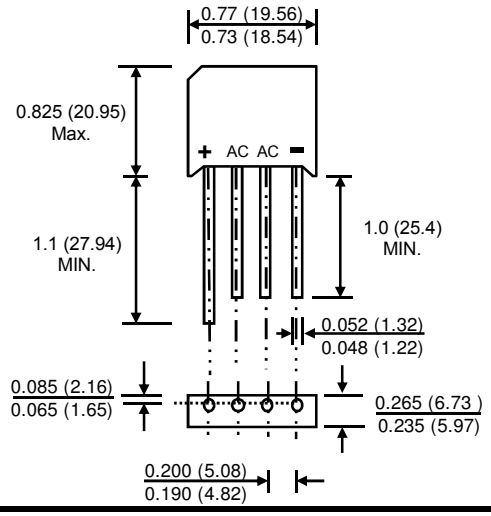

KBP

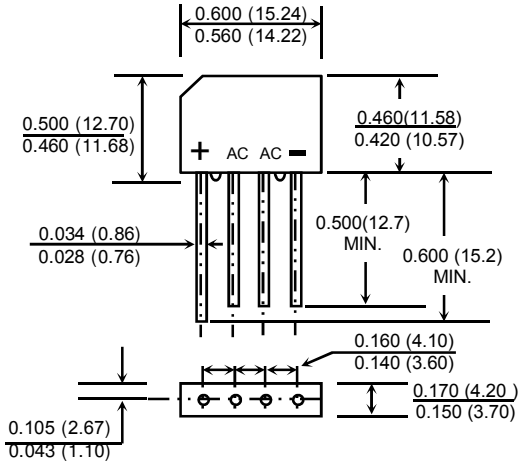

KBU

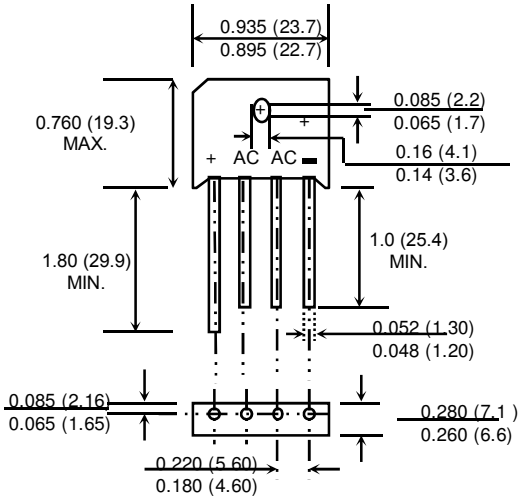

BR6

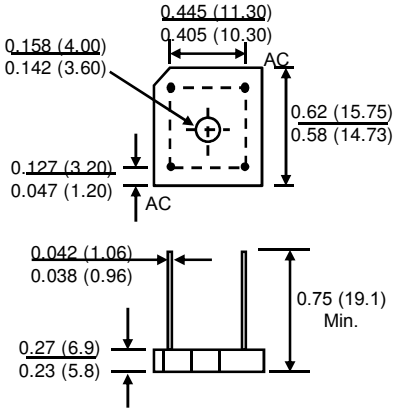

BR10

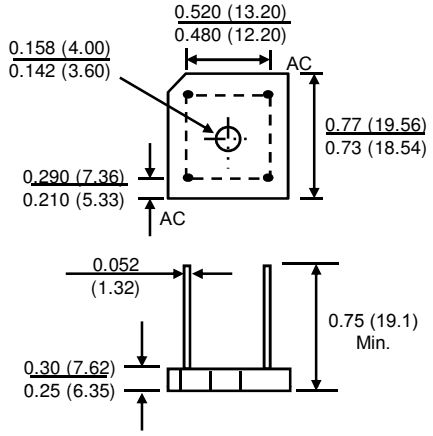

BR50

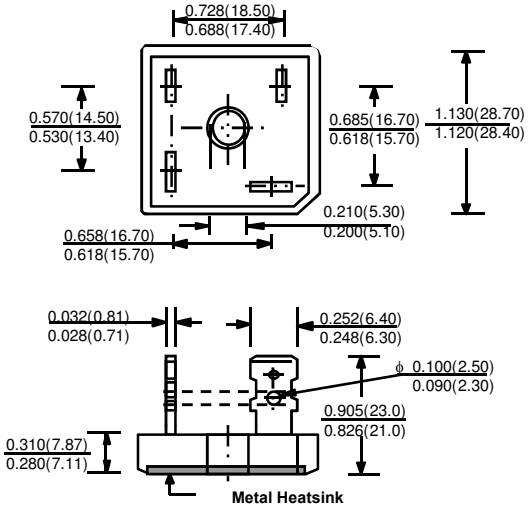

Package Outline

Dimension in inches and (millimeters)

BR50M

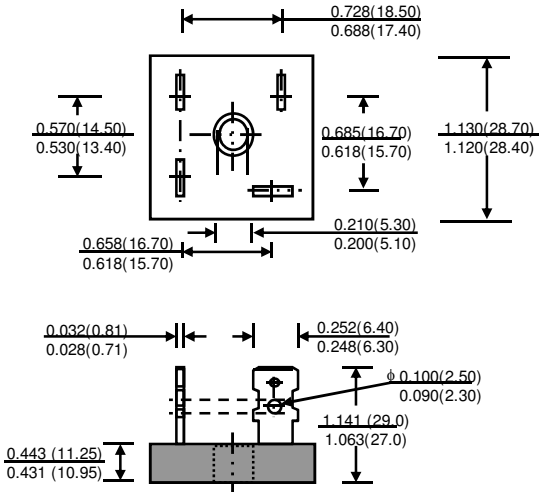

BR50W

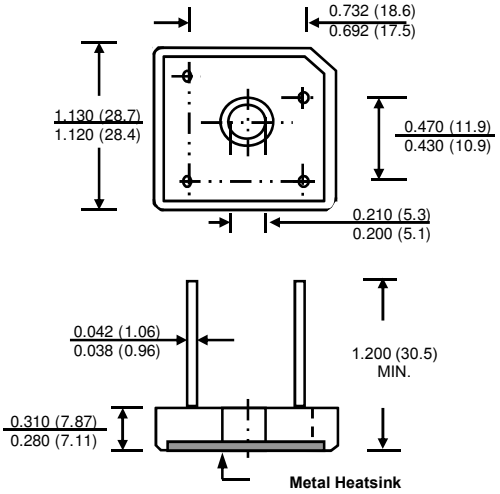

RBV4

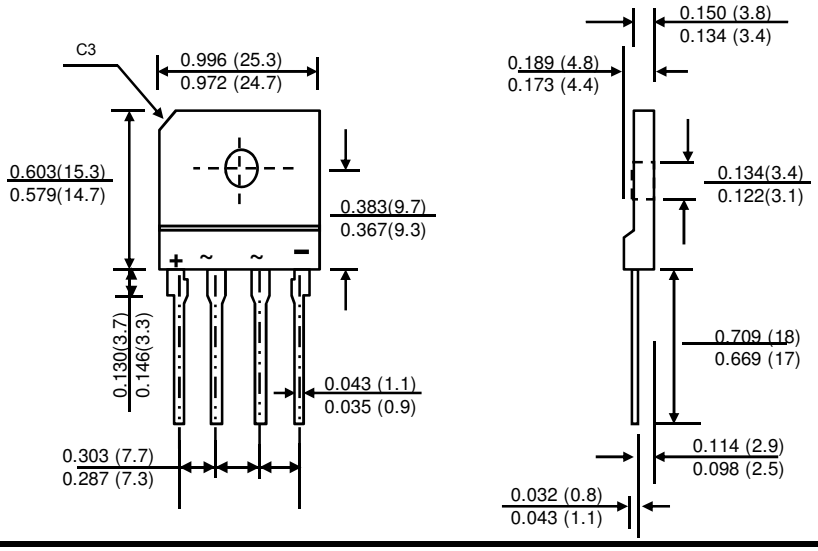

RBV25

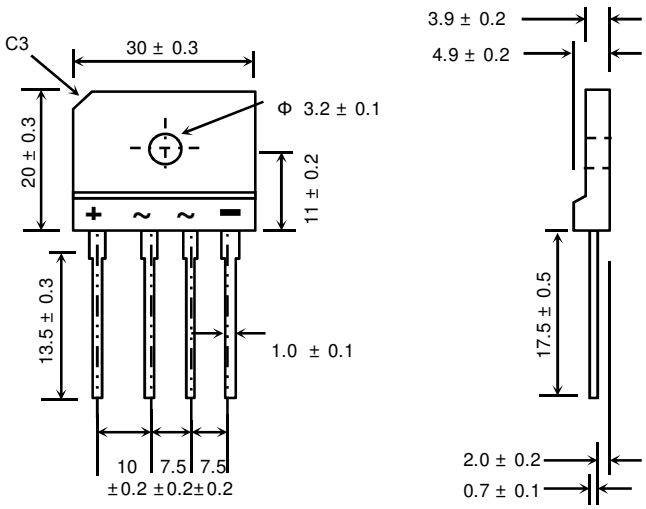

Package Outline

Dimension in inches and (millimeters)

GBU

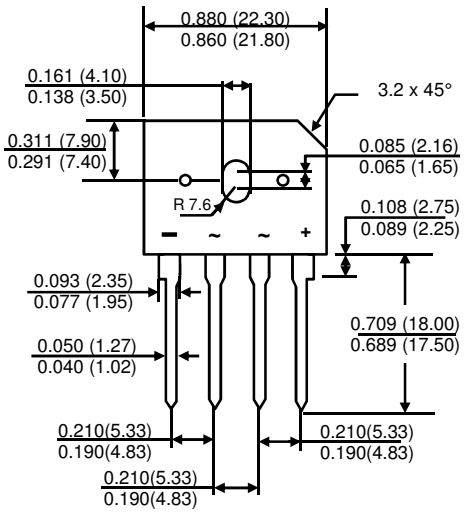

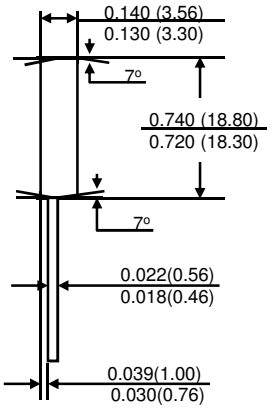

TO-220AC

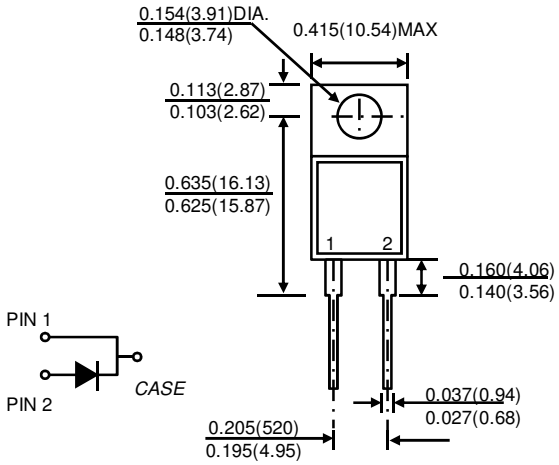

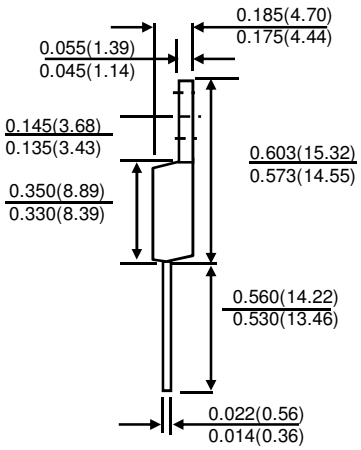

TO-220AB

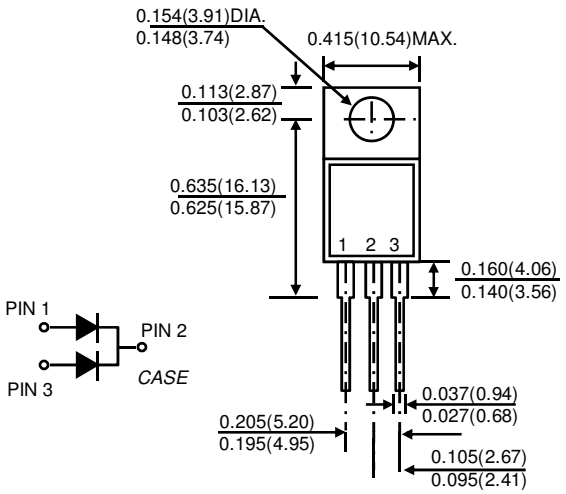

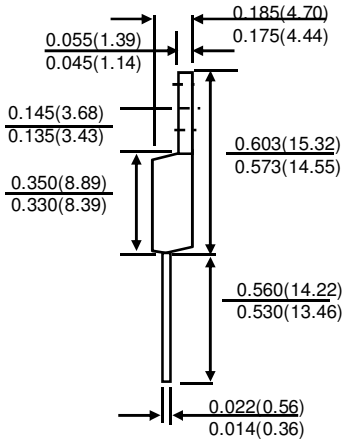

Package Outline

Dimension in inches and (millimeters)

ITO-220AC

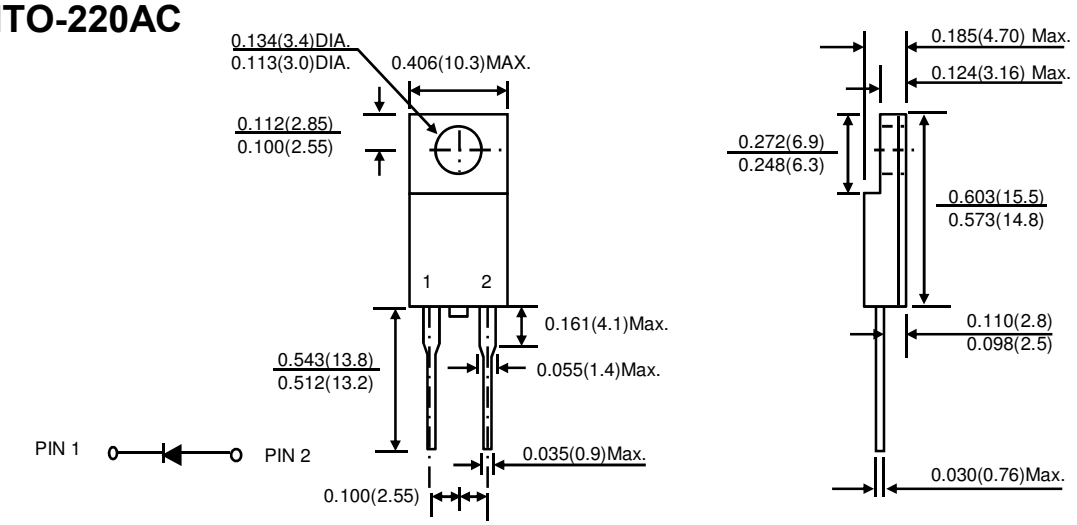

ITO-220AB

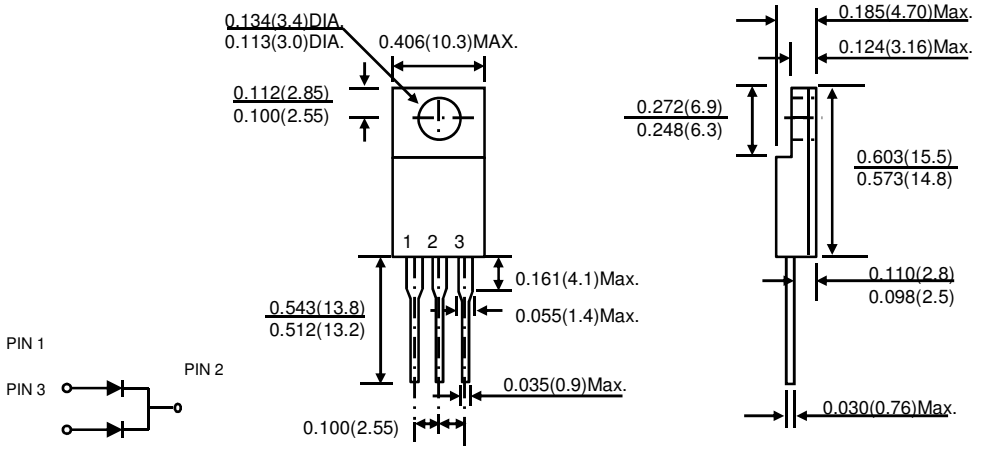

TO-247AD (TO-3P)

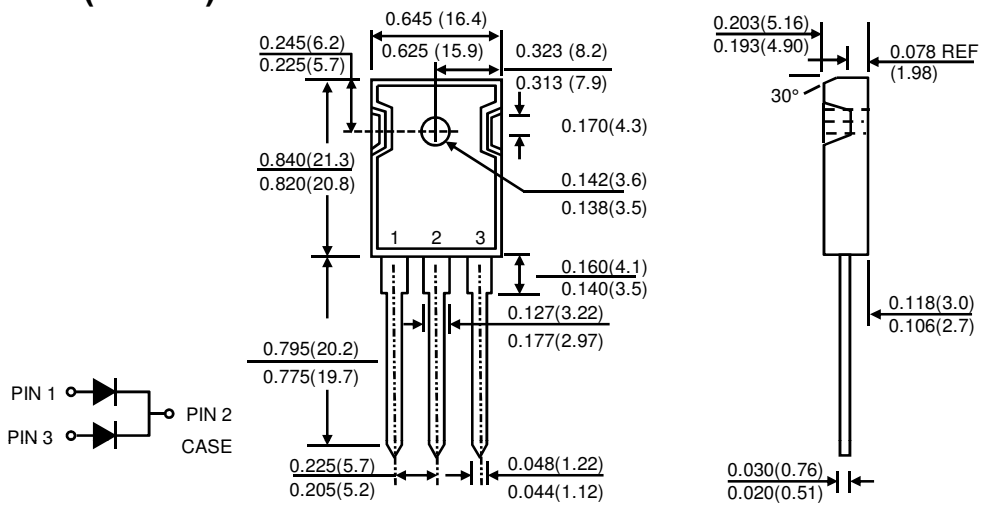

COMPANY HEADQUARTERS

Electronics Industry Public Company Limited
65, 68 Soi Chalongkrung 31 I-EA-T Free Zone,
Lat Krabang Industrial Estate, Lat Krabang, Bangkok 10520 Thailand
Tel: (662) 326 1234, 326 1541, 739 4580
Fax : (662) 326 1020, 326 0933 E-mail : eic@eicsemi.com

EIC WORLDWIDE SALES AGENTS

AMERICA

EIC Semiconductor, Inc.
15705 Arrow Highway, # 4 & 5, Irwindale, CA 91706 USA
Tel: (626) 960-0877 Fax: (626) 960-0871 E-mail: sales@eicsemi.com

ASIA

EIC International Co.,Ltd
Room 711, Block B, Hoi Luen Industrial Centre,
55 Hoi Yuen Road, Kwun Tong, Kowloon, Hong Kong
Tel: +852 3189 9412 Direct Line: +852 3189 9452

EIC Semiconductor Inc.
RM 25E & F, Metropolis 100A, Zhonghan Rd,ShenZhen, China
Tel: 0755-83987303 Fax: 0755-83987323
URL : www.eicsemi.com E-mail : cnsales@eicsemi.com

Sun Light Electronics (H.K) Ltd.
Room 703, Block B, Hoi Luen Industrial Centre,
55 Hoi Yuen Road, Kwun Tong, Kowloon, Hong Kong
Tel : (852) 2389 8280 Fax : (852) 2343 2315
URL : www.sunlight.com.hk E-mail : info@sunlight.com.hk

Sun Light, China Headquarter
Sun Light Electronic Building , Punan Road,
Eastern Section of Guangzhou Economic and Technological Development District,
Gangzhou, China 510760
Tel : (86-20) 82251238 Fax : (86-20) 82251805

REVISION HISTORY

Document revision history

Date	Rivision	Detail
15-Jan-2006	10	Create Cataloque 2006
10-Fab-2008	11	Create Cataloque 2008
7-Jan-2010	12	Create Cataloque 2010
14-Jan-2011	13	Create Cataloque 2011