KBPC3500W - KBPC3510W

SILICON BRIDGE RECTIFIERS

PRV : 50 - 1000 Volts
Io : 35 Amperes

BR50MW

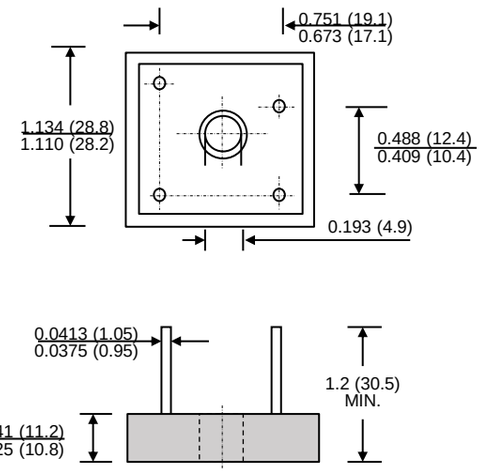

Dimensions in inches and (millimeters)

FEATURES :

* High current capability
* High surge current capability
* High reliability
* Low reverse current
* Low forward voltage drop
* Pb / RoHS Free

MECHANICAL DATA :

* Case : Metal Case
* Epoxy : UL94V-O rate flame retardant
* Terminals : plated .25" (6.35 mm). Faston
* Polarity : Polarity symbols marked on case
* Mounting position : Bolt down on heat-sink with silicone thermal compound between bridge and mounting surface for maximum heat transfer efficiency.
* Weight : 22.88 grams(approximately)

MAXIMUM RATINGS AND ELECTRICAL CHARACTERISTICS

Rating at 25 °C ambient temperature unless otherwise specified.
Single phase, half wave, 60 Hz, resistive or inductive load.
For capacitive load, derate current by 20%.

RATING	SYMBOL	KBPC 3500W	KBPC 3501W	KBPC 3502W	KBPC 3504W	KBPC 3506W	KBPC 3508W	KBPC 3510W	UNIT
Maximum Recurrent Peak Reverse Voltage	V_{RRM}	50	100	200	400	600	800	1000	V
Maximum RMS Voltage	V_{RMS}	35	70	140	280	420	560	700	V
Maximum DC Blocking Voltage	V_{DC}	50	100	200	400	600	800	1000	V
Maximum Average Forward Current Tc = 55°C	$I_{F(AV)}$	35							A
Peak Forward Surge Current Single half sine wave Superimposed on rated load (JEDEC Method)	I_{FSM}	400							A
Current Squared Time at t < 8.3 ms.	I^2t	660							A^2S
Maximum Forward Voltage per Diode at I_F = 17.5 A	V_F	1.1							V
Maximum DC Reverse Current Ta = 25 °C	I_R	10							μA
at Rated DC Blocking Voltage Ta = 100 °C	$I_{R(H)}$	200							μA
Typical Thermal Resistance (Note 1)	RθJC	1.5							°C/W
Typical Thermal Resistance at Junction to Ambient	RθJA	10							°C
Operating Junction Temperature Range	T_J	- 40 to + 150							°C
Storage Temperature Range	T_{STG}	- 40 to + 150							°C

Note :

1. Thermal Resistance from junction to case with units mounted on a 7.5" x 3.5" x 4.6" (19cm.x 9cm.x 11.8cm.) Al.-Finned Plate

RATING AND CHARACTERISTIC CURVES (KBPC3500W - KBPC3510W)

FIG.1 - DERATING CURVE FOR OUTPUT RECTIFIED CURRENT

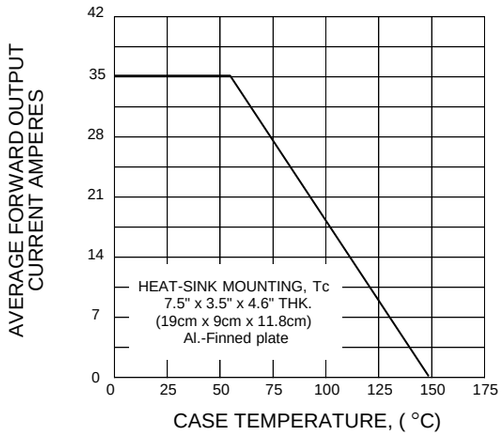

FIG.2 - MAXIMUM NON-REPETITIVE PEAK FORWARD SURGE CURRENT

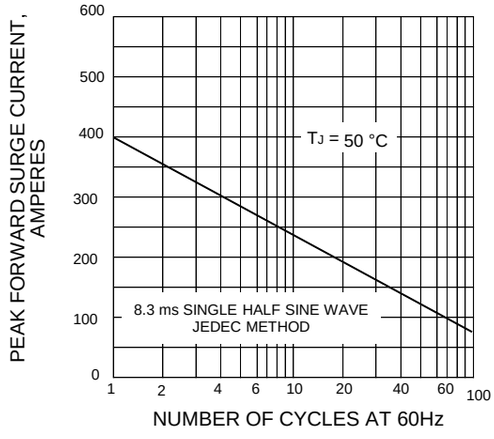

FIG.3 - TYPICAL FORWARD CHARACTERISTICS PER DIODE

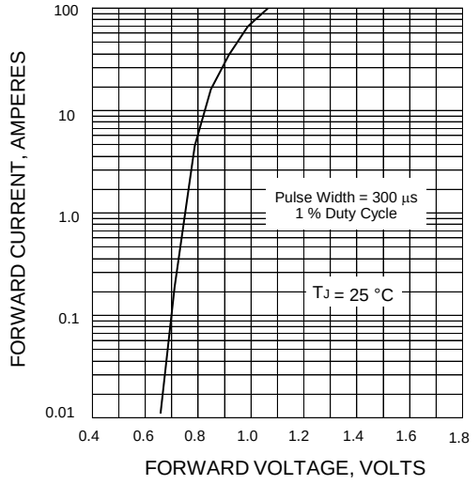

FIG.4 - TYPICAL REVERSE CHARACTERISTICS PER DIODE

