SETA - SETM

SURFACE MOUNT HIGH EFFICIENT RECTIFIERS

PRV : 50 - 1000 Volts
Io : 2.5 Amperes

FEATURES :

* High current capability
* High surge current capability
* High reliability
* Low reverse current
* Low forward voltage drop
* Fast switching for high efficiency
* Pb Free / RoHS Compliant

MECHANICAL DATA :

* Case : SMB Molded plastic
* Epoxy : UL94V-0 rate flame retardant
* Lead : Lead Formed for Surface Mount
* Polarity : Color band denotes cathode end
* Mounting position : Any
* Weight : 0.1079 gram

SMB (DO-214AA)

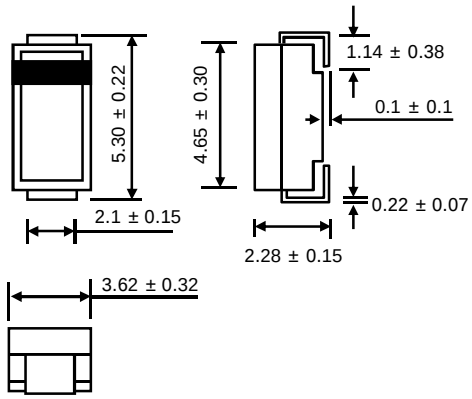

Dimensions in millimeters

MAXIMUM RATINGS AND ELECTRICAL CHARACTERISTICS

Rating at 25 °C ambient temperature unless otherwise specified.
Single phase, half wave, 60 Hz, resistive or inductive load.
For capacitive load, derate current by 20%.

RATING	SYMBOL	SETA	SETB	SETD	SETE	SETG	SETJ	SETK	SETM	UNIT
Maximum Recurrent Peak Reverse Voltage	V_{RRM}	50	100	200	300	400	600	800	1000	V
Maximum RMS Voltage	V_{RMS}	35	70	140	210	280	420	560	700	V
Maximum DC Blocking Voltage	V_{DC}	50	100	200	300	400	600	800	1000	V
Maximum Average Forward Current Ta = 55 °C	$I_{F(AV)}$	2.5								A
Maximum Peak Forward Surge Current, 8.3ms Single half sine wave superimposed on rated load (JEDEC Method)	I_{FSM}	100								A
Maximum Forward Voltage at I_F = 2.5 A	V_F	1.1					1.7			V
Maximum DC Reverse Current Ta = 25 °C	I_R	10								µA
at Rated DC Blocking Voltage Ta = 100 °C	$I_{R(H)}$	50								µA
Maximum Reverse Recovery Time (Note 1)	Trr	50					75			ns
Typical Junction Capacitance (Note 2)	C_J	50								pf
Junction Temperature Range	T_J	- 65 to + 150								°C
Storage Temperature Range	T_{STG}	- 65 to + 150								°C

Notes :

(1) Reverse Recovery Test Conditions : I_F = 0.5 A, I_R = 1.0 A, Irr = 0.25 A.

(2) Measured at 1.0 MHz and applied reverse voltage of 4.0 V_{DC}

RATING AND CHARACTERISTIC CURVES (SETA - SETM)

FIG.1 - REVERSE RECOVERY TIME CHARACTERISTIC AND TEST CIRCUIT DIAGRAM

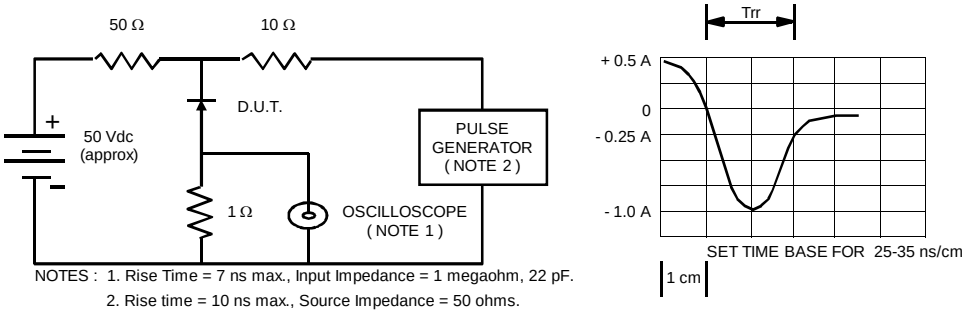

NOTES : 1. Rise Time = 7 ns max., Input Impedance = 1 megaohm, 22 pF.
2. Rise time = 10 ns max., Source Impedance = 50 ohms.
3. All Resistors = Non-inductive Types.

FIG.2 - DERATING CURVE FOR OUTPUT RECTIFIED CURRENT

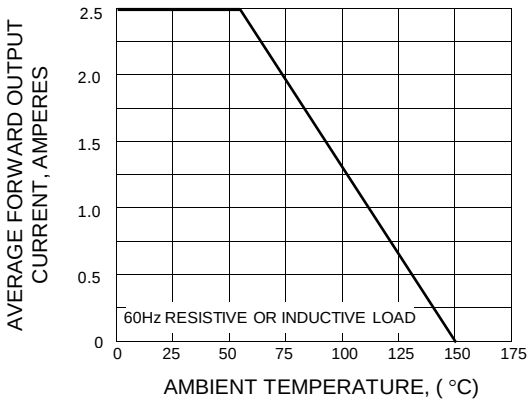

FIG.3 - MAXIMUM NON-REPETITIVE PEAK FORWARD SURGE CURRENT

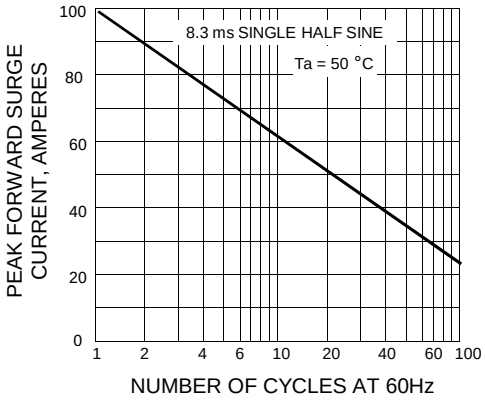

FIG.4 - TYPICAL FORWARD CHARACTERISTICS

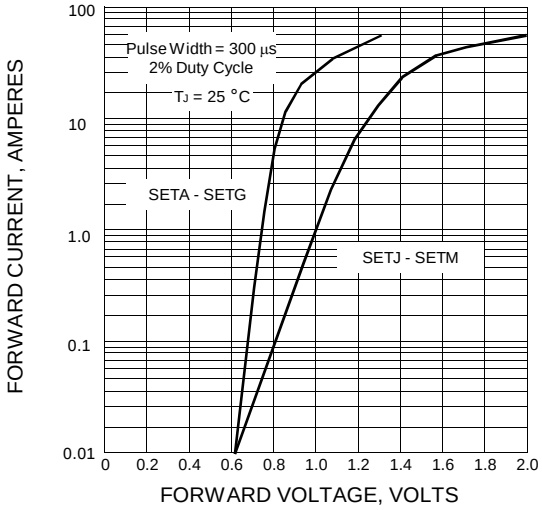

FIG.5 - TYPICAL REVERSE CHARACTERISTICS

