Certificate Number: Q10561

Certificate Number: E17276

SN1A - SN13

SURFACE MOUNT RECTIFIERS

PRV : 50 - 1300 Volts
Io : 1.0 Ampere

SMA (DO-214AC)

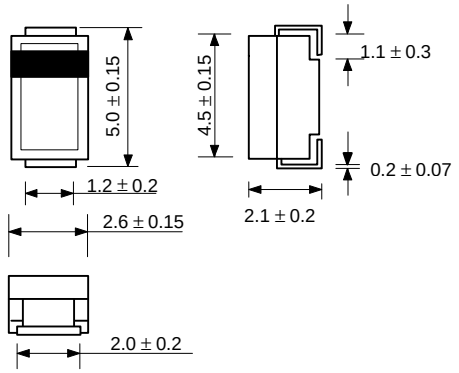

Dimensions in millimeter

FEATURES :

* High current capability
* High surge current capability
* High reliability
* Low reverse current
* Low forward voltage drop
* Pb / RoHS Free

MECHANICAL DATA :

* Case : SMA Molded plastic
* Epoxy : UL94V-O rate flame retardant
* Lead : Lead Formed for Surface Mount
* Polarity : Color band denotes cathode end
* Mounting position : Any
* Weight : 0.067 gram

MAXIMUM RATINGS AND ELECTRICAL CHARACTERISTICS

Rating at 25 °C ambient temperature unless otherwise specified.
Single phase, half wave, 60 Hz, resistive or inductive load.
For capacitive load, derate current by 20%.

RATING	SYMBOL	SN1A	SN1B	SN1D	SN1G	SN1J	SN1K	SN1M	SN13	UNIT
Maximum Repetitive Peak Reverse Voltage	V_{RRM}	50	100	200	400	600	800	1000	1300	V
Maximum RMS Voltage	V_{RMS}	35	70	140	280	420	560	700	1000	V
Maximum DC Blocking Voltage	V_{DC}	50	100	200	400	600	800	1000	1300	V
Maximum Average Forward Current Ta = 75°C	I_F	1.0								A
Peak Forward Surge Current 8.3ms Single half sine wave Superimposed on rated load (JEDEC Method)	I_{FSM}	30								A
Maximum Forward Voltage at I_F = 1.0 Amp.	V_F	1.0								V
Maximum DC Reverse Current Ta = 25 °C	I_R	2.0								µA
at rated DC Blocking Voltage Ta = 100 °C	$I_{R(H)}$	50								µA
Typical Reverse Recovery Time (I_F = 0.5 A, I_R = 1.0 A, Irr = 0.25 A.)	Trr	2.0								µs
Typical Junction Capacitance (Note1)	C_J	30								pF
Junction Temperature Range	T_J	- 65 to + 175								°C
Storage Temperature Range	T_{STG}	- 65 to + 175								°C

Note :

(1) Measured at 1.0 MHz and applied reverse voltage of 4.0V_{DC}

Rev. 02 : March 25, 2005

RATING AND CHARACTERISTIC CURVES (SN1A - SN13)

FIG.1 - DERATING CURVE FOR OUTPUT RECTIFIED CURRENT

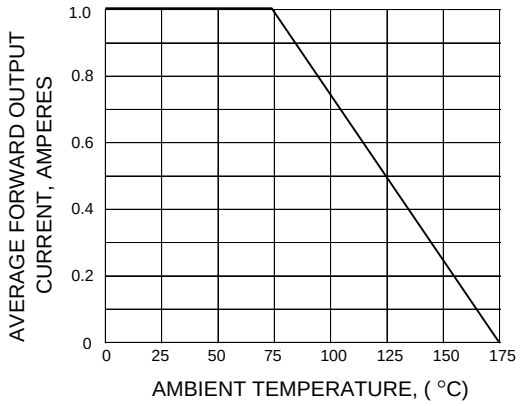

FIG.2 - MAXIMUM NON-REPETITIVE PEAK FORWARD SURGE CURRENT

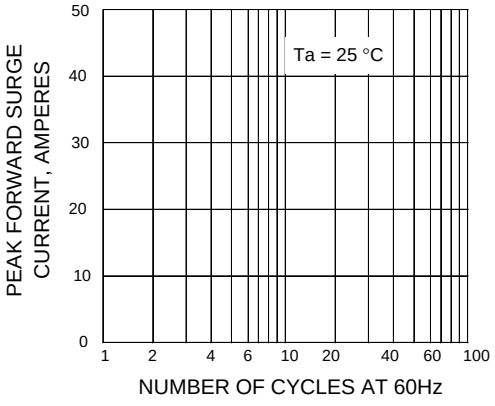

FIG.3 - TYPICAL FORWARD CHARACTERISTICS

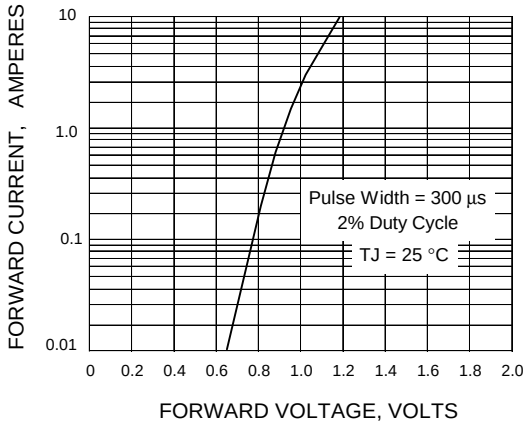

FIG.4 - TYPICAL REVERSE CHARACTERISTICS

