SN2A - SN2M

SURFACE MOUNT RECTIFIERS

PRV : 50 - 1000 Volts
Io : 2.0 Amperes

FEATURES :

* High current capability
* High surge current capability
* High reliability
* Low reverse current
* Low forward voltage drop
* Pb / RoHS Free

MECHANICAL DATA :

* Case : SMB Molded plastic
* Epoxy : UL94V-0 rate flame retardant
* Lead : Lead Formed for Surface Mount
* Polarity : Color band denotes cathode end
* Mounting position : Any
* Weight : 0.1097 gram

SMB (DO-214AA)

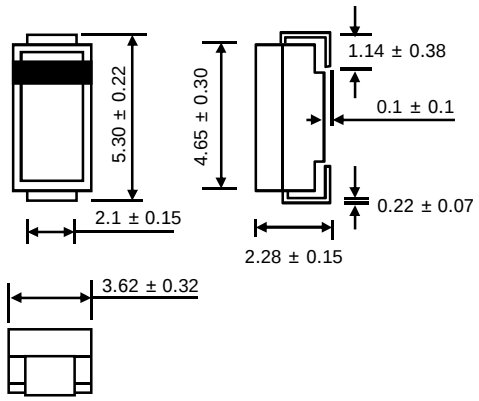

Dimensions in millimeters

MAXIMUM RATINGS AND ELECTRICAL CHARACTERISTICS

Rating at 25 °C ambient temperature unless otherwise specified.
Single phase, half wave, 60 Hz, resistive or inductive load.
For capacitive load, derate current by 20%.

RATING	SYMBOL	SN2A	SN2B	SN2D	SN2G	SN2J	SN2K	SN2M	UNIT
Maximum Repetitive Peak Reverse Voltage	V_{RRM}	50	100	200	400	600	800	1000	Volts
Maximum RMS Voltage	V_{RMS}	35	70	140	280	420	560	700	Volts
Maximum DC Blocking Voltage	V_{DC}	50	100	200	400	600	800	1000	Volts
Maximum Average Forward Current 0.375"(9.5mm) Lead Length Ta = 50 °C	I_F	2.0							Amps.
Peak Forward Surge Current 8.3ms Single half sine wave Superimposed on rated load (JEDEC Method)	I_{FSM}	75							Amps.
Maximum Forward Voltage at I_F = 2.0 Amps.	V_F	1.0							Volts
Maximum DC Reverse Current Ta = 25 °C	I_R	5.0							μA
at rated DC Blocking Voltage Ta = 100 °C	$I_{R(H)}$	50							μA
Typical Junction Capacitance (Note1)	C_J	75							pF
Junction Temperature Range	T_J	- 65 to + 150							°C
Storage Temperature Range	T_{STG}	- 65 to + 150							°C

Note :

(1) Measured at 1.0 MHz and applied reverse voltage of 4.0VDC

RATING AND CHARACTERISTIC CURVES (SN2A - SN2M)

FIG.1 - DERATING CURVE FOR OUTPUT RECTIFIED CURRENT

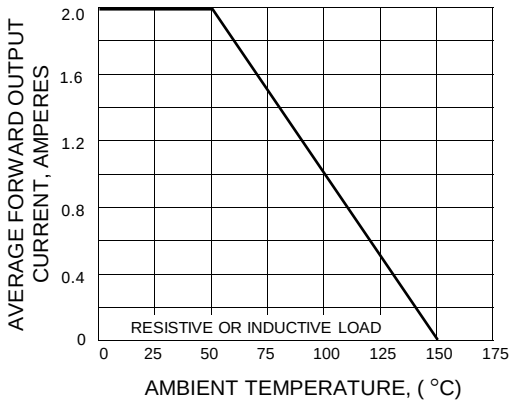

FIG.2 - MAXIMUM NON-REPETITIVE PEAK FORWARD SURGE CURRENT

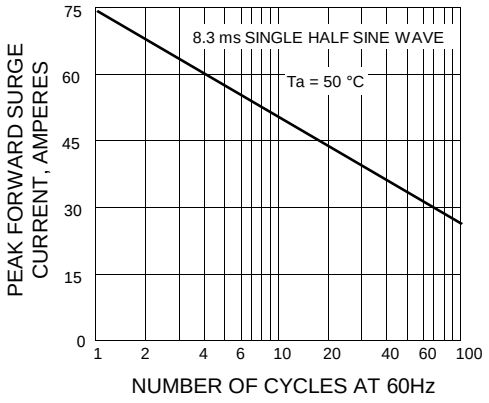

FIG.3 - TYPICAL FORWARD CHARACTERISTICS

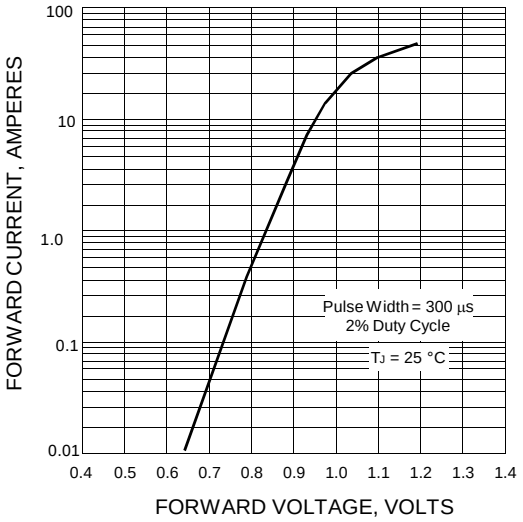

FIG.4 - TYPICAL REVERSE CHARACTERISTICS

