Certificate Number: Q10561

Certificate Number: E17276

STUS06H - STUS5D0

SURFACE MOUNT TRANSIENT VOLTAGE SUPPRESSOR

V_{BR} : 6.8 - 200 Volts
P_{PK} : 500 Watts

SMA (DO-214AC)

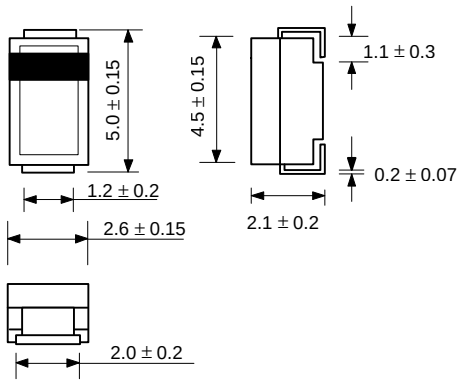

Dimensions in millimeter

FEATURES :

* 500W surge capability at 1ms
* Excellent clamping capability
* Low zener impedance
* Fast response time : typically less then 1.0 ps from 0 volt to $V_{BR(min.)}$
* Typical I_R less then 1µA above 10V
* Pb / RoHS Free

MECHANICAL DATA

* Case : SMA Molded plastic
* Epoxy : UL94V-O rate flame retardant
* Lead : Lead Formed for Surface Mount
* Polarity : Color band denotes cathode end except Bipolar.
* Mounting position : Any
* Weight : 0.064 grams

DEVICES FOR BIPOLAR APPLICATIONS

For bi-directional altered the third letter of type from "U" to be "B".
Electrical characteristics apply in both directions

MAXIMUM RATINGS

Rating at 25 °C ambient temperature unless otherwise specified.

Rating	Symbol	Value	Unit
Peak Power Dissipation at Ta = 25 °C, Tp=1ms (Note1)	P_{PK}	Minimum 500	W
Steady State Power Dissipation at T_L = 75 °C (Note 2)	P_D	3.0	W
Peak Forward Surge Current, 8.3ms Single Half Sine-Wave Superimposed on Rated Load (JEDEC Method) (Note 3)	I_{FSM}	70	A
Operating and Storage Temperature Range	T_J, T_{STG}	- 55 to + 150	°C

Note :

(1) Non-repetitive Current pulse, per Fig. 5 and derated above Ta = 25 °C per Fig. 1
(2) Mounted on copper Lead area at 5.0 mm^2 (0.013 mm thick).
(3) 8.3 ms single half sine-wave, duty cycle = 4 pulses per Minutes maximum.

ELECTRICAL CHARACTERISTICS

Rating at 25 °C ambient temperature unless otherwise specified

TYPE	Breakdown Voltage @ It (Note 1)			Working Peak Reverse Voltage	Maximum Reverse Leakage @ V_{RWM}	Maximum Reverse Current	Maximum Clamping Voltage @ I_{RSM}	Maximum Voltage Temperature Variation of V_{BR}
	V_{BR} (V)		It	V_{RWM}	I_R	I_{RSM}	V_{RSM}	
	Min.	Max.	(mA)	(V)	(µA)	(A)	(V)	(mV / °C)
STUS06H	6.40	7.3	10	5.0	600	52.0	9.6	5.0
STUS56H	6.40	7.0	10	5.0	600	54.3	9.2	5.0
STUS07A	6.67	8.15	10	6.0	600	43.9	11.4	5.0
STUS57A	6.67	7.37	10	6.0	600	48.5	10.3	5.0
STUS07G	7.22	8.82	10	6.5	400	40.7	12.3	5.0
STUS57G	7.22	7.98	10	6.5	400	44.7	11.2	5.0
STUS08C	7.78	9.51	10	7.0	150	37.8	13.3	6.0
STUS58C	7.78	8.60	10	7.0	150	41.7	12.0	6.0
STUS08I	8.33	10.2	1.0	7.5	50	35.0	14.3	7.0
STUS58I	8.33	9.21	1.0	7.5	50	38.8	12.9	7.0
STUS09B	8.89	10.9	1.0	8.0	25	33.3	15.0	7.0
STUS59B	8.89	9.30	1.0	8.0	25	36.7	13.6	7.0
STUS010	9.44	11.5	1.0	8.5	5.0	31.4	15.9	8.0
STUS510	9.44	10.4	1.0	8.5	5.0	34.7	14.4	8.0
STUS011	10.0	12.2	1.0	9.0	1.0	29.5	16.9	9.0
STUS511	10.0	11.1	1.0	9.0	1.0	32.5	15.4	9.0
STUS012	11.1	13.6	1.0	10.0	1.0	26.6	18.8	10.0
STUS512	11.1	12.3	1.0	10.0	1.0	29.4	17.0	10.0
STUS013	12.2	14.9	1.0	11.0	1.0	24.9	20.1	11.0
STUS513	12.2	13.5	1.0	11.0	1.0	27.4	18.2	11.0
STUS014	13.3	16.3	1.0	12.0	1.0	22.7	22.0	12.0
STUS514	13.3	14.7	1.0	12.0	1.0	25.1	19.9	12.0
STUS015	14.4	17.6	1.0	13.0	1.0	21.0	23.8	13.0
STUS515	14.4	15.9	1.0	13.0	1.0	23.2	21.5	13.0
STUS016	15.6	19.1	1.0	14.0	1.0	19.4	25.8	14.0
STUS516	15.6	17.2	1.0	14.0	1.0	21.5	23.2	14.0
STUS018	16.7	20.4	1.0	15.0	1.0	18.8	26.9	16.0
STUS518	16.7	18.5	1.0	15.0	1.0	20.6	24.4	16.0
STUS019	17.8	21.8	1.0	16.0	1.0	17.6	28.8	19.0
STUS519	17.8	19.7	1.0	16.0	1.0	19.2	26.0	17.0
STUS020	18.9	23.1	1.0	17.0	1.0	16.4	30.5	20.0
STUS520	18.9	20.9	1.0	17.0	1.0	18.1	27.6	19.0
STUS021	20.0	24.4	1.0	18.0	1.0	15.5	32.2	21.0
STUS521	20.0	22.1	1.0	18.0	1.0	17.2	29.2	20.0
STUS023	22.2	27.1	1.0	20.0	1.0	13.9	35.8	25.0
STUS523	22.2	24.5	1.0	20.0	1.0	15.4	32.4	23.0
STUS026	24.4	29.8	1.0	22.0	1.0	12.7	39.4	28.0
STUS526	24.4	26.9	1.0	22.0	1.0	14.1	35.5	25.0
STUS028	26.7	32.6	1.0	24.0	1.0	11.6	43.0	31.0
STUS528	26.7	29.5	1.0	24.0	1.0	12.8	38.9	28.0
STUS030	28.9	35.3	1.0	26.0	1.0	10.7	46.6	31.0
STUS530	28.9	31.9	1.0	26.0	1.0	11.9	42.1	30.0
STUS033	31.1	38.0	1.0	28.0	1.0	9.9	50.0	35.0
STUS533	31.1	34.4	1.0	28.0	1.0	11.0	45.4	31.0
STUS035	33.3	40.7	1.0	30.0	1.0	9.3	53.5	39.0
STUS535	33.3	36.8	1.0	30.0	1.0	10.3	48.4	36.0
STUS039	36.7	44.9	1.0	33.0	1.0	8.5	59.0	42.0
STUS539	36.7	40.6	1.0	33.0	1.0	9.4	53.3	39.0

ELECTRICAL CHARACTERISTICS

Rating at 25 °C ambient temperature unless otherwise specified

TYPE	Breakdown Voltage @ It (Note 1)			Working Peak Reverse Voltage	Maximum Reverse Leakage @ V_{RWM}	Maximum Reverse Current	Maximum Clamping Voltage @ I_{RSM}	Maximum Voltage Temperature Variation of V_{BR}
	V_{BR} (V)		It	V_{RWM}	I_R	I_{RSM}	V_{RSM}	
	Min.	Max.	(mA)	(V)	(µA)	(A)	(V)	(mV / °C)
STUS042	40.0	48.9	1.0	36.0	1.0	7.8	64.3	46.0
STUS542	40.0	44.2	1.0	36.0	1.0	8.6	58.1	41.0
STUS047	44.4	54.3	1.0	40.0	1.0	7.0	71.4	51.0
STUS547	44.4	49.1	1.0	40.0	1.0	7.8	64.5	46.0
STUS050	47.8	58.4	1.0	43.0	1.0	6.5	76.7	55.0
STUS550	47.8	52.8	1.0	43.0	1.0	7.2	69.4	50.0
STUS053	50.0	61.1	1.0	45.0	1.0	6.2	80.3	58.0
STUS553	50.0	55.3	1.0	45.0	1.0	6.9	72.7	52.0
STUS056	53.3	65.1	1.0	48.0	1.0	5.8	85.5	63.0
STUS556	53.3	58.9	1.0	48.0	1.0	6.5	77.4	56.0
STUS060	56.7	69.3	1.0	51.0	1.0	5.5	91.1	66.0
STUS560	56.7	62.7	1.0	51.0	1.0	6.1	82.4	61.0
STUS063	60.0	73.3	1.0	54.0	1.0	5.2	96.3	71.0
STUS563	60.0	66.3	1.0	54.0	1.0	5.7	87.1	65.0
STUS068	64.4	78.7	1.0	58.0	1.0	4.9	103	78.0
STUS568	64.4	71.2	1.0	58.0	1.0	5.3	93.6	70.0
STUS071	66.7	81.5	1.0	60.0	1.0	4.7	107	80.0
STUS571	66.7	73.7	1.0	60.0	1.0	5.2	96.8	71.0
STUS075	71.1	86.9	1.0	64.0	1.0	4.4	114	86.0
STUS575	71.1	78.6	1.0	64.0	1.0	4.9	103	76.0
STUS082	77.8	95.1	1.0	70.0	1.0	4.0	125	94.0
STUS582	77.8	86.0	1.0	70.0	1.0	4.4	113	85.0
STUS088	83.3	102	1.0	75.0	1.0	3.7	134	101
STUS588	83.3	92.1	1.0	75.0	1.0	4.1	121	91.0
STUS091	86.7	106	1.0	78.0	1.0	3.6	139	105
STUS591	86.7	95.8	1.0	78.0	1.0	4.0	126	95.0
STUS099	94.4	115	1.0	85.0	1.0	3.3	151	114
STUS599	94.4	104	1.0	85.0	1.0	3.6	137	103
STUS0B1	100	122	1.0	90.0	1.0	3.1	160	121
STUS5B1	100	111	1.0	90.0	1.0	3.4	146	110
STUS0B2	111	136	1.0	100	1.0	2.8	179	135
STUS5B2	111	123	1.0	100	1.0	3.1	162	123
STUS0B3	122	149	1.0	110	1.0	2.6	196	148
STUS5B3	122	135	1.0	110	1.0	2.8	177	133
STUS0B4	133	163	1.0	120	1.0	2.3	214	162
STUS5B4	133	147	1.0	120	1.0	2	193	146
STUS0B5	144	176	1.0	130	1.0	2.2	231	175
STUS5B5	144	159	1.0	130	1.0	2.4	209	158
STUS0B8	167	204	1.0	150	1.0	1.9	268	203
STUS5B8	167	185	1.0	150	1.0	2.1	243	184
STUS0B9	178	218	1.0	160	1.0	1.7	287	217
STUS5B9	178	197	1.0	160	1.0	1.9	259	196
STUS0D0	189	231	1.0	170	1.0	1.6	304	230
STUS5D0	189	209	1.0	170	1.0	1.8	275	208

Note:

(1) V_{BR} measured after It applied for 300 µs., It = square wave pulse or equivalent.

(2) V_F = 3.5 Vmax., I_F = 35 Amps. (6.8 Volts thru 91 Volts)
V_F = 5.0 Vmax., I_F = 35 Amps. (150 Volts thru 200 Volts) per 1/2 square or equivalent sine wave.
PW = 8.3 ms, duty cycle = 4 pulses per minute maximum.

(3) "STU" or "STB" will be omitted in marking on the diode.

RATING AND CHARACTERISTIC CURVES (STUS06H - STUS5D0)

FIG.1 - PULSE DERATING CURVE

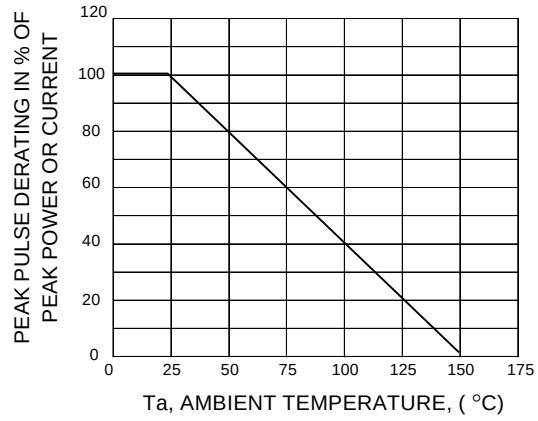

FIG.2 - MAXIMUM NON-REPETITIVE SURGE CURRENT

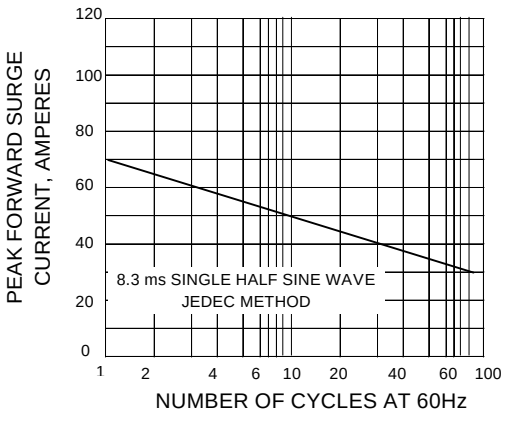

FIG.3 - STEADY STATE POWER DERATING

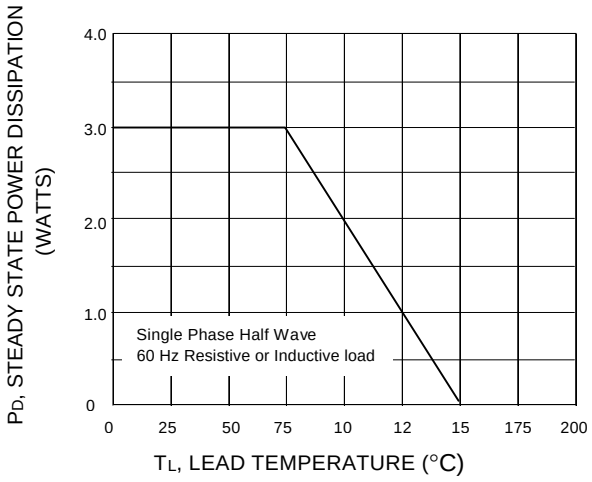

FIG.4 - PULSE RATING CURVE

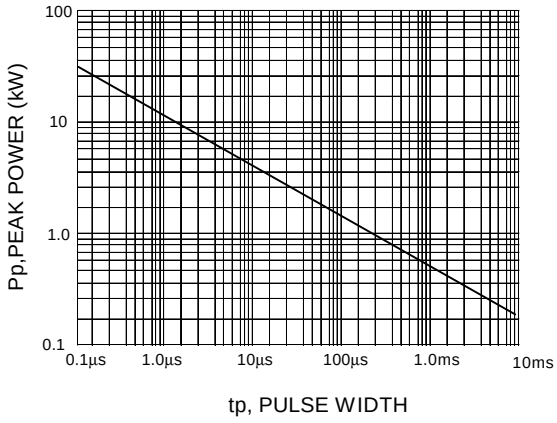

FIG.5 - PULSE WAVEFORM

