Adjustable handles

Technopolymer, steel or stainless steel clamping element

METRIC | INOX STAINLESS STEEL | RoHS | PA | +130° -30°

LEVER BODY

Glass-fibre reinforced polyamide based (PA) technopolymer, grey-black colour, matte finish. Built-in zinc alloy toothed insert for coupling to the metal clamping element.

STANDARD EXECUTIONS

- **ERZ-A**: black-oxide steel clamping element with threaded hole and retaining screw. AISI 302 stainless steel return spring.
- **ERZ-SST**: AISI 303 stainless steel clamping element with threaded hole and retaining screw. AISI 302 stainless steel return spring.
- **ERZ-p**: black-oxide steel clamping element with threaded stud and retaining screw. AISI 302 stainless steel return spring.
- **ERZ-SST-p**: AISI 303 stainless steel clamping element with threaded stud and retaining screw. AISI 302 stainless steel return spring.

Retaining screw with six-lobed socket to fit TORX®* (see communication attached).

FEATURES AND APPLICATIONS

Particularly suitable when the lever turning angle is limited owing to lack of space.

The metal teeth of the built-in zinc alloy insert allow the assembly of clamping elements completely made out of metal, which can be easily modified by machining in case of special assembly requirements.

SPECIAL EXECUTIONS ON REQUEST

Lever body in orange colour.

INSTRUCTIONS OF USE

For clamping, lift the lever to disengage the clamping device teeth and bring it back to start position. By releasing the lever, the return spring automatically engages the teeth.

If the lever cannot make a 360° rotation, the clamping element can be easily screwed by means of the six-lobed socket front head screw (after having disengaged the lever).

* Registered trademark by TEXTRON INC.



ERGOSTYLE® ELESA Original design

ERZ-A
ERZ-SST

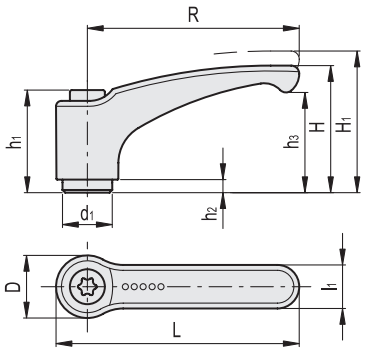

ERZ-A

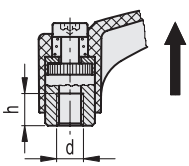

Conversion Table
1 mm = 0.039 inch

R	
mm	inch
44	1.73
63	2.48
78	3.07
95	3.74

ERZ-A ▼ METRIC

Code	Description	R	d	L	D	H	H1	h	h1	h2	h3	d1	l1	Teeth no.	⚖
237102-*	ERZ.44-A-M4-*	44	M4	52	16	30.5	34	8	24.5	3.5	22.5	10	11	18	16
237103-*	ERZ.44-A-M5-*	44	M5	52	16	30.5	34	8	24.5	3.5	22.5	10	11	18	16
237104-*	ERZ.44-A-M6-*	44	M6	52	16	30.5	34	8	24.5	3.5	22.5	10	11	18	15
237134-*	ERZ.63-A-M6-*	63	M6	72.5	19	38.5	42	10	31	3.5	30	13.5	13.5	24	36
237135-*	ERZ.63-A-M8-*	63	M8	72.5	19	38.5	42	10	31	3.5	30	13.5	13.5	24	34
237155-*	ERZ.78-A-M8-*	78	M8	89.5	23	45	50.5	14	36	3.5	35	16	16	26	61
237156-*	ERZ.78-A-M10-*	78	M10	89.5	23	45	50.5	14	36	3.5	35	16	16	26	55
237157-*	ERZ.78-A-M12-*	78	M12	89.5	23	45	50.5	14	36	3.5	35	16	16	26	57
237175-*	ERZ.95-A-M10-*	95	M10	108	26	56.5	61.5	17	43	5	45	19	18	28	93
237176-*	ERZ.95-A-M12-*	95	M12	108	26	56.5	61.5	17	43	5	45	19	18	28	86

ERZ-SST ▼ INOX STAINLESS STEEL METRIC

Code	Description	R	d	L	D	H	H1	h	h1	h2	h3	d1	l1	Teeth no.	⚖
239102-*	ERZ.44-SST-M4-*	44	M4	52	16	30.5	34	8	24.5	3.5	22.5	10	11	18	17
239105-*	ERZ.44-SST-M5-*	44	M5	52	16	30.5	34	8	24.5	3.5	22.5	10	11	18	16
239106-*	ERZ.44-SST-M6-*	44	M6	52	16	30.5	34	8	24.5	3.5	22.5	10	11	18	15
239135-*	ERZ.63-SST-M6-*	63	M6	72.5	19	38.5	42	10	31	3.5	30	13.5	13.5	24	36
239136-*	ERZ.63-SST-M8-*	63	M8	72.5	19	38.5	42	10	31	3.5	30	13.5	13.5	24	34
239155-*	ERZ.78-SST-M8-*	78	M8	89.5	23	45	50.5	14	36	3.5	35	16	16	26	61
239156-*	ERZ.78-SST-M10-*	78	M10	89.5	23	45	50.5	14	36	3.5	35	16	16	26	55
239157-*	ERZ.78-SST-M12-*	78	M12	89.5	23	45	50.5	14	36	3.5	35	16	16	26	57
239175-*	ERZ.95-SST-M10-*	95	M10	108	26	56.5	61.5	17	43	5	45	19	18	28	93
239176-*	ERZ.95-SST-M12-*	95	M12	108	26	56.5	61.5	17	43	5	45	19	18	28	86

Models all rights reserved in accordance with the law. Always mention the source when reproducing our drawings and photos.

ERZ-p

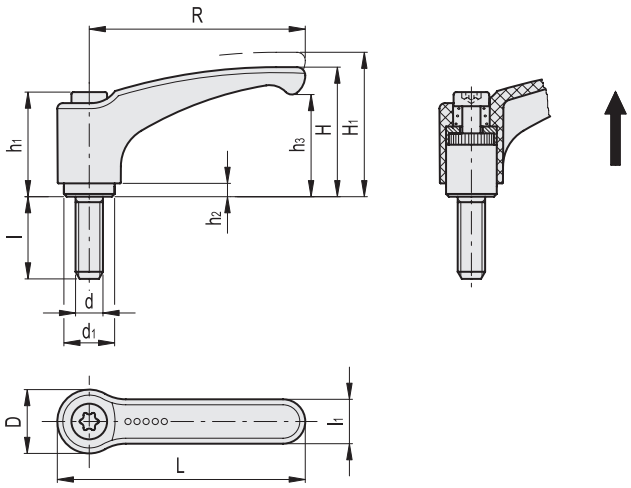

Conversion Table *1 mm = 0.039 inch*	
R	
mm	inch
44	1.73
63	2.48
78	3.07
95	3.74

ERZ-p

METRIC

Codice	Description	R	d	L	D	H	H1	h1	h2	h3	d1	l	l1	Teeth no.	⚖
238103-*	ERZ.44-p-M4x12-*	44	M4	52	16	30.5	34	24.5	3.5	22.5	10	12	11	18	15
238105-*	ERZ.44-p-M4x16-*	44	M4	52	16	30.5	34	24.5	3.5	22.5	10	16	11	18	16
238107-*	ERZ.44-p-M4x20-*	44	M4	52	16	30.5	34	24.5	3.5	22.5	10	20	11	18	17
238109-*	ERZ.44-p-M4x25-*	44	M4	52	16	30.5	34	24.5	3.5	22.5	10	25	11	18	18
238111-*	ERZ.44-p-M4x32-*	44	M4	52	16	30.5	34	24.5	3.5	22.5	10	32	11	18	19
238133-*	ERZ.44-p-M5x12-*	44	M5	52	16	30.5	34	24.5	3.5	22.5	10	12	11	18	17
238135-*	ERZ.44-p-M5x16-*	44	M5	52	16	30.5	34	24.5	3.5	22.5	10	16	11	18	18
238137-*	ERZ.44-p-M5x20-*	44	M5	52	16	30.5	34	24.5	3.5	22.5	10	20	11	18	19
238139-*	ERZ.44-p-M5x25-*	44	M5	52	16	30.5	34	24.5	3.5	22.5	10	25	11	18	20
238141-*	ERZ.44-p-M5x32-*	44	M5	52	16	30.5	34	24.5	3.5	22.5	10	32	11	18	21
238143-*	ERZ.44-p-M5x40-*	44	M5	52	16	30.5	34	24.5	3.5	22.5	10	40	11	18	22
238145-*	ERZ.44-p-M5x50-*	44	M5	52	16	30.5	34	24.5	3.5	22.5	10	50	11	18	23
238153-*	ERZ.44-p-M6x12-*	44	M6	52	16	30.5	34	24.5	3.5	22.5	10	12	11	18	19
238155-*	ERZ.44-p-M6x16-*	44	M6	52	16	30.5	34	24.5	3.5	22.5	10	16	11	18	20
238157-*	ERZ.44-p-M6x20-*	44	M6	52	16	30.5	34	24.5	3.5	22.5	10	20	11	18	21
238159-*	ERZ.44-p-M6x25-*	44	M6	52	16	30.5	34	24.5	3.5	22.5	10	25	11	18	22
238161-*	ERZ.44-p-M6x32-*	44	M6	52	16	30.5	34	24.5	3.5	22.5	10	32	11	18	23
238163-*	ERZ.44-p-M6x40-*	44	M6	52	16	30.5	34	24.5	3.5	22.5	10	40	11	18	24
238165-*	ERZ.44-p-M6x50-*	44	M6	52	16	30.5	34	24.5	3.5	22.5	10	50	11	18	25
238333-*	ERZ.63-p-M6x12-*	63	M6	72.5	19	38.5	42	31	3.5	30	13.5	12	13.5	24	47
238335-*	ERZ.63-p-M6x16-*	63	M6	72.5	19	38.5	42	31	3.5	30	13.5	16	13.5	24	49
238337-*	ERZ.63-p-M6x20-*	63	M6	72.5	19	38.5	42	31	3.5	30	13.5	20	13.5	24	55
238339-*	ERZ.63-p-M6x25-*	63	M6	72.5	19	38.5	42	31	3.5	30	13.5	25	13.5	24	57
238341-*	ERZ.63-p-M6x32-*	63	M6	72.5	19	38.5	42	31	3.5	30	13.5	32	13.5	24	61
238343-*	ERZ.63-p-M6x40-*	63	M6	72.5	19	38.5	42	31	3.5	30	13.5	40	13.5	24	68
238345-*	ERZ.63-p-M6x50-*	63	M6	72.5	19	38.5	42	31	3.5	30	13.5	50	13.5	24	77
238347-*	ERZ.63-p-M6x63-*	63	M6	72.5	19	38.5	42	31	3.5	30	13.5	63	13.5	24	79
238351-*	ERZ.63-p-M8x12-*	63	M8	72.5	19	38.5	42	31	3.5	30	13.5	12	13.5	24	40
238353-*	ERZ.63-p-M8x16-*	63	M8	72.5	19	38.5	42	31	3.5	30	13.5	16	13.5	24	41
238355-*	ERZ.63-p-M8x20-*	63	M8	72.5	19	38.5	42	31	3.5	30	13.5	20	13.5	24	42
238357-*	ERZ.63-p-M8x25-*	63	M8	72.5	19	38.5	42	31	3.5	30	13.5	25	13.5	24	43
238359-*	ERZ.63-p-M8x32-*	63	M8	72.5	19	38.5	42	31	3.5	30	13.5	32	13.5	24	44
238361-*	ERZ.63-p-M8x40-*	63	M8	72.5	19	38.5	42	31	3.5	30	13.5	40	13.5	24	46
238363-*	ERZ.63-p-M8x50-*	63	M8	72.5	19	38.5	42	31	3.5	30	13.5	50	13.5	24	48
238365-*	ERZ.63-p-M8x63-*	63	M8	72.5	19	38.5	42	31	3.5	30	13.5	63	13.5	24	51
238373-*	ERZ.63-p-M10x20-*	63	M10	72.5	19	38.5	42	31	3.5	30	13.5	20	13.5	24	42
238375-*	ERZ.63-p-M10x25-*	63	M10	72.5	19	38.5	42	31	3.5	30	13.5	25	13.5	24	43
238377-*	ERZ.63-p-M10x32-*	63	M10	72.5	19	38.5	42	31	3.5	30	13.5	32	13.5	24	45
238379-*	ERZ.63-p-M10x40-*	63	M10	72.5	19	38.5	42	31	3.5	30	13.5	40	13.5	24	47
238381-*	ERZ.63-p-M10x50-*	63	M10	72.5	19	38.5	42	31	3.5	30	13.5	50	13.5	24	52
238383-*	ERZ.63-p-M10x63-*	63	M10	72.5	19	38.5	42	31	3.5	30	13.5	63	13.5	24	53
238385-*	ERZ.63-p-M10x80-*	63	M10	72.5	19	38.5	42	31	3.5	30	13.5	80	13.5	24	57

Models all rights reserved in accordance with the law. Always mention the source when reproducing our drawings and photos.

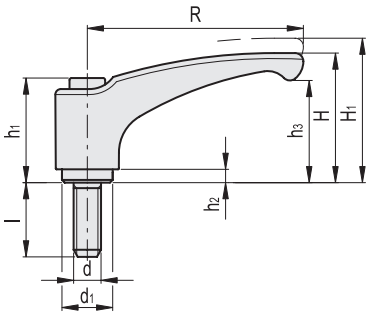

ERZ-p
ERZ-SST-p

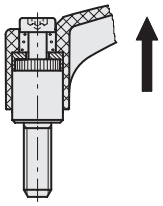

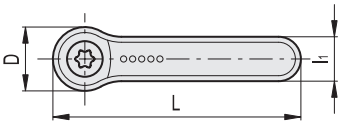

Conversion Table *1 mm = 0.039 inch*	
R	
mm	inch
44	1.73
63	2.48
78	3.07
95	3.74

METRIC

Codice	Description	R	d	L	D	H	H1	h1	h2	h3	d1	l	l1	Teeth no.	⚖
238533-*	ERZ.78-p-M8x16-*	78	M8	89.5	23	45	50.5	36	3.5	35	16	16	16	26	70
238535-*	ERZ.78-p-M8x20-*	78	M8	89.5	23	45	50.5	36	3.5	35	16	20	16	26	73
238537-*	ERZ.78-p-M8x25-*	78	M8	89.5	23	45	50.5	36	3.5	35	16	25	16	26	76
238539-*	ERZ.78-p-M8x32-*	78	M8	89.5	23	45	50.5	36	3.5	35	16	32	16	26	81
238541-*	ERZ.78-p-M8x40-*	78	M8	89.5	23	45	50.5	36	3.5	35	16	40	16	26	86
238543-*	ERZ.78-p-M8x50-*	78	M8	89.5	23	45	50.5	36	3.5	35	16	50	16	26	88
238545-*	ERZ.78-p-M8x63-*	78	M8	89.5	23	45	50.5	36	3.5	35	16	63	16	26	94
238547-*	ERZ.78-p-M8x80-*	78	M8	89.5	23	45	50.5	36	3.5	35	16	80	16	26	102
238551-*	ERZ.78-p-M10x16-*	78	M10	89.5	23	45	50.5	36	3.5	35	16	16	16	26	82
238553-*	ERZ.78-p-M10x20-*	78	M10	89.5	23	45	50.5	36	3.5	35	16	20	16	26	85
238555-*	ERZ.78-p-M10x25-*	78	M10	89.5	23	45	50.5	36	3.5	35	16	25	16	26	91
238557-*	ERZ.78-p-M10x32-*	78	M10	89.5	23	45	50.5	36	3.5	35	16	32	16	26	98
238559-*	ERZ.78-p-M10x40-*	78	M10	89.5	23	45	50.5	36	3.5	35	16	40	16	26	108
238561-*	ERZ.78-p-M10x50-*	78	M10	89.5	23	45	50.5	36	3.5	35	16	50	16	26	120
238563-*	ERZ.78-p-M10x63-*	78	M10	89.5	23	45	50.5	36	3.5	35	16	63	16	26	124
238565-*	ERZ.78-p-M10x80-*	78	M10	89.5	23	45	50.5	36	3.5	35	16	80	16	26	127
238571-*	ERZ.78-p-M12x20-*	78	M12	89.5	23	45	50.5	36	3.5	35	16	20	16	26	68
238573-*	ERZ.78-p-M12x25-*	78	M12	89.5	23	45	50.5	36	3.5	35	16	25	16	26	70
238575-*	ERZ.78-p-M12x32-*	78	M12	89.5	23	45	50.5	36	3.5	35	16	32	16	26	73
238577-*	ERZ.78-p-M12x40-*	78	M12	89.5	23	45	50.5	36	3.5	35	16	40	16	26	75
238579-*	ERZ.78-p-M12x50-*	78	M12	89.5	23	45	50.5	36	3.5	35	16	50	16	26	79
238581-*	ERZ.78-p-M12x63-*	78	M12	89.5	23	45	50.5	36	3.5	35	16	63	16	26	85
238583-*	ERZ.78-p-M12x80-*	78	M12	89.5	23	45	50.5	36	3.5	35	16	80	16	26	88
238723-*	ERZ.95-p-M10x16-*	95	M10	108	26	56.5	61.5	43	5	45	19	16	18	28	111
238725-*	ERZ.95-p-M10x20-*	95	M10	108	26	56.5	61.5	43	5	45	19	20	18	28	113
238727-*	ERZ.95-p-M10x25-*	95	M10	108	26	56.5	61.5	43	5	45	19	25	18	28	115
238729-*	ERZ.95-p-M10x32-*	95	M10	108	26	56.5	61.5	43	5	45	19	32	18	28	118
238731-*	ERZ.95-p-M10x40-*	95	M10	108	26	56.5	61.5	43	5	45	19	40	18	28	121
238733-*	ERZ.95-p-M10x50-*	95	M10	108	26	56.5	61.5	43	5	45	19	50	18	28	128
238735-*	ERZ.95-p-M10x63-*	95	M10	108	26	56.5	61.5	43	5	45	19	63	18	28	133
238737-*	ERZ.95-p-M10x80-*	95	M10	108	26	56.5	61.5	43	5	45	19	80	18	28	141
238747-*	ERZ.95-p-M12x16-*	95	M12	108	26	56.5	61.5	43	5	45	19	16	18	28	113
238749-*	ERZ.95-p-M12x20-*	95	M12	108	26	56.5	61.5	43	5	45	19	20	18	28	117
238751-*	ERZ.95-p-M12x25-*	95	M12	108	26	56.5	61.5	43	5	45	19	25	18	28	122
238753-*	ERZ.95-p-M12x32-*	95	M12	108	26	56.5	61.5	43	5	45	19	32	18	28	125
238755-*	ERZ.95-p-M12x40-*	95	M12	108	26	56.5	61.5	43	5	45	19	40	18	28	132
238757-*	ERZ.95-p-M12x50-*	95	M12	108	26	56.5	61.5	43	5	45	19	50	18	28	141
238759-*	ERZ.95-p-M12x63-*	95	M12	108	26	56.5	61.5	43	5	45	19	63	18	28	151
238761-*	ERZ.95-p-M12x80-*	95	M12	108	26	56.5	61.5	43	5	45	19	80	18	28	160
238773-*	ERZ.95-p-M16x25-*	95	M16	108	26	56.5	61.5	43	5	45	19	25	18	28	139
238775-*	ERZ.95-p-M16x32-*	95	M16	108	26	56.5	61.5	43	5	45	19	32	18	28	146
238777-*	ERZ.95-p-M16x40-*	95	M16	108	26	56.5	61.5	43	5	45	19	40	18	28	154
238779-*	ERZ.95-p-M16x50-*	95	M16	108	26	56.5	61.5	43	5	45	19	50	18	28	171
238781-*	ERZ.95-p-M16x63-*	95	M16	108	26	56.5	61.5	43	5	45	19	63	18	28	184
238783-*	ERZ.95-p-M16x80-*	95	M16	108	26	56.5	61.5	43	5	45	19	80	18	28	199

Models all rights reserved in accordance with the law. Always mention the source when reproducing our drawings and photos.

ERZ-SST-p

INOX STAINLESS STEEL METRIC

Codice	Description	R	d	L	D	H	H1	h1	h2	h3	d1	l	l1	Teeth no.	⚖
239203-*	ERZ.44 SST-p-M4x12-*	44	M4	52	16	30.5	34	24.5	3.5	22.5	10	12	11	18	15
239205-*	ERZ.44 SST-p-M4x16-*	44	M4	52	16	30.5	34	24.5	3.5	22.5	10	16	11	18	17
239207-*	ERZ.44 SST-p-M4x20-*	44	M4	52	16	30.5	34	24.5	3.5	22.5	10	20	11	18	18
239209-*	ERZ.44 SST-p-M4x25-*	44	M4	52	16	30.5	34	24.5	3.5	22.5	10	25	11	18	20
239211-*	ERZ.44 SST-p-M4x32-*	44	M4	52	16	30.5	34	24.5	3.5	22.5	10	32	11	18	21
239233-*	ERZ.44 SST-p-M5x12-*	44	M5	52	16	30.5	34	24.5	3.5	22.5	10	12	11	18	17
239235-*	ERZ.44 SST-p-M5x16-*	44	M5	52	16	30.5	34	24.5	3.5	22.5	10	16	11	18	18
239237-*	ERZ.44 SST-p-M5x20-*	44	M5	52	16	30.5	34	24.5	3.5	22.5	10	20	11	18	19
239239-*	ERZ.44 SST-p-M5x25-*	44	M5	52	16	30.5	34	24.5	3.5	22.5	10	25	11	18	20
239241-*	ERZ.44 SST-p-M5x32-*	44	M5	52	16	30.5	34	24.5	3.5	22.5	10	32	11	18	21
239243-*	ERZ.44 SST-p-M5x40-*	44	M5	52	16	30.5	34	24.5	3.5	22.5	10	40	11	18	22
239245-*	ERZ.44 SST-p-M5x50-*	44	M5	52	16	30.5	34	24.5	3.5	22.5	10	50	11	18	23
239253-*	ERZ.44 SST-p-M6x12-*	44	M6	52	16	30.5	34	24.5	3.5	22.5	10	12	11	18	19
239255-*	ERZ.44 SST-p-M6x16-*	44	M6	52	16	30.5	34	24.5	3.5	22.5	10	16	11	18	20
239257-*	ERZ.44 SST-p-M6x20-*	44	M6	52	16	30.5	34	24.5	3.5	22.5	10	20	11	18	21
239259-*	ERZ.44 SST-p-M6x25-*	44	M6	52	16	30.5	34	24.5	3.5	22.5	10	25	11	18	22
239423-*	ERZ.44 SST-p-M6x32-*	44	M6	52	16	30.5	34	24.5	3.5	22.5	10	32	11	18	23
239425-*	ERZ.44 SST-p-M6x40-*	44	M6	52	16	30.5	34	24.5	3.5	22.5	10	40	11	18	24
239427-*	ERZ.44 SST-p-M6x50-*	44	M6	52	16	30.5	34	24.5	3.5	22.5	10	50	11	18	27
239429-*	ERZ.63 SST-p-M6x16-*	63	M6	72.5	19	38.5	42	31	3.5	30	13.5	16	13.5	24	40
239431-*	ERZ.63 SST-p-M6x20-*	63	M6	72.5	19	38.5	42	31	3.5	30	13.5	20	13.5	24	41
239433-*	ERZ.63 SST-p-M6x25-*	63	M6	72.5	19	38.5	42	31	3.5	30	13.5	25	13.5	24	42
239435-*	ERZ.63 SST-p-M6x32-*	63	M6	72.5	19	38.5	42	31	3.5	30	13.5	32	13.5	24	43
239437-*	ERZ.63 SST-p-M6x40-*	63	M6	72.5	19	38.5	42	31	3.5	30	13.5	40	13.5	24	44
239439-*	ERZ.63 SST-p-M6x50-*	63	M6	72.5	19	38.5	42	31	3.5	30	13.5	50	13.5	24	46
239441-*	ERZ.63 SST-p-M6x63-*	63	M6	72.5	19	38.5	42	31	3.5	30	13.5	63	13.5	24	48
239453-*	ERZ.63 SST-p-M8x16-*	63	M8	72.5	19	38.5	42	31	3.5	30	13.5	16	13.5	24	42
239455-*	ERZ.63 SST-p-M8x20-*	63	M8	72.5	19	38.5	42	31	3.5	30	13.5	20	13.5	24	46
239457-*	ERZ.63 SST-p-M8x25-*	63	M8	72.5	19	38.5	42	31	3.5	30	13.5	25	13.5	24	48
239459-*	ERZ.63 SST-p-M8x32-*	63	M8	72.5	19	38.5	42	31	3.5	30	13.5	32	13.5	24	50
239643-*	ERZ.63 SST-p-M8x40-*	63	M8	72.5	19	38.5	42	31	3.5	30	13.5	40	13.5	24	52
239645-*	ERZ.63 SST-p-M8x50-*	63	M8	72.5	19	38.5	42	31	3.5	30	13.5	50	13.5	24	54
239647-*	ERZ.63 SST-p-M8x63-*	63	M8	72.5	19	38.5	42	31	3.5	30	13.5	63	13.5	24	58
239673-*	ERZ.78 SST-p-M8x20-*	78	M8	89.5	23	45	50.5	36	3.5	35	16	20	16	26	69
239675-*	ERZ.78 SST-p-M8x25-*	78	M8	89.5	23	45	50.5	36	3.5	35	16	25	16	26	72
239677-*	ERZ.78 SST-p-M8x32-*	78	M8	89.5	23	45	50.5	36	3.5	35	16	32	16	26	76
239679-*	ERZ.78 SST-p-M8x40-*	78	M8	89.5	23	45	50.5	36	3.5	35	16	40	16	26	80
239681-*	ERZ.78 SST-p-M8x50-*	78	M8	89.5	23	45	50.5	36	3.5	35	16	50	16	26	84
239683-*	ERZ.78 SST-p-M8x63-*	78	M8	89.5	23	45	50.5	36	3.5	35	16	63	16	26	89
239685-*	ERZ.78 SST-p-M8x80-*	78	M8	89.5	23	45	50.5	36	3.5	35	16	80	16	26	97
239653-*	ERZ.78 SST-p-M10x20-*	78	M10	89.5	23	45	50.5	36	3.5	35	16	20	16	26	73
239655-*	ERZ.78 SST-p-M10x25-*	78	M10	89.5	23	45	50.5	36	3.5	35	16	25	16	26	76
239657-*	ERZ.78 SST-p-M10x32-*	78	M10	89.5	23	45	50.5	36	3.5	35	16	32	16	26	80
239659-*	ERZ.78 SST-p-M10x40-*	78	M10	89.5	23	45	50.5	36	3.5	35	16	40	16	26	84
239661-*	ERZ.78 SST-p-M10x50-*	78	M10	89.5	23	45	50.5	36	3.5	35	16	50	16	26	88
239663-*	ERZ.78 SST-p-M10x63-*	78	M10	89.5	23	45	50.5	36	3.5	35	16	63	16	26	94
239665-*	ERZ.78 SST-p-M10x80-*	78	M10	89.5	23	45	50.5	36	3.5	35	16	80	16	26	102
239919-*	ERZ.78 SST-p-M12x20-*	78	M12	89.5	23	45	50.5	36	3.5	35	16	20	16	26	68
239921-*	ERZ.78 SST-p-M12x25-*	78	M12	89.5	23	45	50.5	36	3.5	35	16	25	16	26	70
239923-*	ERZ.78 SST-p-M12x32-*	78	M12	89.5	23	45	50.5	36	3.5	35	16	32	16	26	73
239925-*	ERZ.78 SST-p-M12x40-*	78	M12	89.5	23	45	50.5	36	3.5	35	16	40	16	26	75
239927-*	ERZ.78 SST-p-M12x50-*	78	M12	89.5	23	45	50.5	36	3.5	35	16	50	16	26	79
239929-*	ERZ.78 SST-p-M12x63-*	78	M12	89.5	23	45	50.5	36	3.5	35	16	63	16	26	85
239931-*	ERZ.78 SST-p-M12x80-*	78	M12	89.5	23	45	50.5	36	3.5	35	16	80	16	26	88
239823-*	ERZ.95 SST-p-M10x20-*	95	M10	108	26	56.5	61.5	43	5	45	19	20	18	28	113
239825-*	ERZ.95 SST-p-M10x25-*	95	M10	108	26	56.5	61.5	43	5	45	19	25	18	28	115
239827-*	ERZ.95 SST-p-M10x32-*	95	M10	108	26	56.5	61.5	43	5	45	19	32	18	28	118
239829-*	ERZ.95 SST-p-M10x40-*	95	M10	108	26	56.5	61.5	43	5	45	19	40	18	28	121
239831-*	ERZ.95 SST-p-M10x50-*	95	M10	108	26	56.5	61.5	43	5	45	19	50	18	28	128
239833-*	ERZ.95 SST-p-M10x63-*	95	M10	108	26	56.5	61.5	43	5	45	19	63	18	28	133
239835-*	ERZ.95 SST-p-M10x80-*	95	M10	108	26	56.5	61.5	43	5	45	19	80	18	28	141
239849-*	ERZ.95 SST-p-M12x20-*	95	M12	108	26	56.5	61.5	43	5	45	19	20	18	28	117
239851-*	ERZ.95 SST-p-M12x25-*	95	M12	108	26	56.5	61.5	43	5	45	19	25	18	28	122
239853-*	ERZ.95 SST-p-M12x32-*	95	M12	108	26	56.5	61.5	43	5	45	19	32	18	28	125
239855-*	ERZ.95 SST-p-M12x40-*	95	M12	108	26	56.5	61.5	43	5	45	19	40	18	28	132
239857-*	ERZ.95 SST-p-M12x50-*	95	M12	108	26	56.5	61.5	43	5	45	19	50	18	28	138
239859-*	ERZ.95 SST-p-M12x63-*	95	M12	108	26	56.5	61.5	43	5	45	19	63	18	28	148
239861-*	ERZ.95 SST-p-M12x80-*	95	M12	108	26	56.5	61.5	43	5	45	19	80	18	28	160

Models all rights reserved in accordance with the law. Always mention the source when reproducing our drawings and photos.

elesa