EPCOS

SAW Components

Data Sheet B7801



Data Sheet SMD

Chip **S**ized **S**AW **P**ackage **DCS4A**

Features

- Low-loss RF filter for mobile telephone PCS systems, receive path
- Usable passband 60 MHz
- No matching network required for operation at 50 Ω
- Package for **S**urface **M**ounted **T**echnology (**SMT**)

Terminals

- Ni, gold-plated

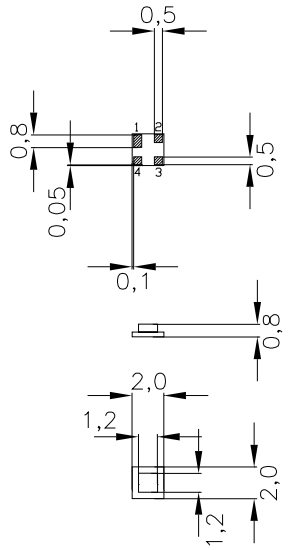

Dimensions in mm, approx. weight 0,01 g

Pin configuration

2	Input
1	Input - ground
3	Output
4	Output - ground

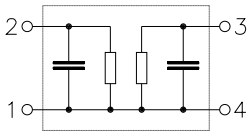

Type	Ordering code	Marking and Package according to	Packing according to
B7801	B39202-B7801-A510	C61157-A7-A63	F61074-V8154-Z000

Electrostatic **S**ensitive **D**evice (**ESD**)

Maximum ratings

Operable temperature range	T	– 40/+ 85	˚C	
Storage temperature range	T_{stg}	– 40/+ 85	˚C	
DC voltage	V_{DC}	3	V	
Input power max.				source and load impedance 50 Ω
	P_{IN}	5	dBm	peak power of GSM signal, duty cycle 1 : 8
		0	dBm	CDMA signal

Data Sheet SMD

Characteristics

Operating temperature range: T = +25 +- 2˚C
Terminating source impedance: Z_S = 50 Ω
Terminating load impedance: Z_L = 50 Ω

			min.	typ.	max.	
Center frequency	f_c		—	1960,0	—	MHz
Maximum insertion attenuation	α_{max}					
1930,0 ...1990,0	MHz		—	3,1	3,7	dB
Amplitude ripple (p-p)	$\Delta\alpha$					
1930,0 ...1990,0	MHz		—	1,2	1,8	dB
Input VSWR						
1930,0 ...1990,0	MHz		—	1,7	2,0	
Output VSWR						
1930,0 ...1990,0	MHz		—	1,7	2,0	
Attenuation	α					
10,0 ...1500,0	MHz		19,0	21,0	—	dB
1500,0 ...1830,0	MHz		23,0	27,0	—	dB
1830,0 ...1910,0	MHz		17,0	22,0	—	dB
2030,0 ...2070,0	MHz		15,0	28,0	—	dB
2070,0 ...2800,0	MHz		21,0	23,0	—	dB
3000,0 ...6000,0	MHz		16,0	18,0	—	dB

Characteristics

Operating temperature range: T = -30 to +80˚C
Terminating source impedance: Z_S = 50 Ω
Terminating load impedance: Z_L = 50 Ω

			min.	typ.	max.	
Center frequency	f_c		—	1960,0	—	MHz
Maximum insertion attenuation	α_{max}					
1930,0 ...1990,0	MHz		—	3,6	4,0	dB
Amplitude ripple (p-p)	$\Delta\alpha$					
1930,0 ...1990,0	MHz		—	1,8	2,2	dB
Input VSWR						
1930,0 ...1990,0	MHz		—	1,7	2,0	
Output VSWR						
1930,0 ...1990,0	MHz		—	1,7	2,0	
Attenuation	α					
10,0 ...1500,0	MHz		18,0	20,0	—	dB
1500,0 ...1830,0	MHz		23,0	27,0	—	dB
1830,0 ...1910,0	MHz		10,0	19,0	—	dB
2030,0 ...2070,0	MHz		15,0	28,0	—	dB
2070,0 ...2800,0	MHz		21,0	23,0	—	dB
3000,0 ...6000,0	MHz		16,0	18,0	—	dB

Characteristics

Operating temperature range: T = -30 to +85˚C
Terminating source impedance: Z_S = 50 Ω
Terminating load impedance: Z_L = 50 Ω

				min.	typ.	max.	
Center frequency			f_c	—	1960,0	—	MHz
Maximum insertion attenuation			α_{max}				
	1930,0	...1990,0	MHz	—	3,6	4,0	dB
Amplitude ripple (p-p)			$\Delta\alpha$				
	1930,0	...1990,0	MHz	—	1,8	2,2	dB
Input VSWR							
	1930,0	...1990,0	MHz	—	1,7	2,0	
Output VSWR							
	1930,0	...1990,0	MHz	—	1,7	2,0	
Attenuation			α				
	10,0	...1500,0	MHz	18,0	20,0	—	dB
	1500,0	...1830,0	MHz	23,0	27,0	—	dB
	1830,0	...1910,0	MHz	9,0	19,0	—	dB
	2030,0	...2070,0	MHz	15,0	28,0	—	dB
	2070,0	...2800,0	MHz	21,0	23,0	—	dB
	3000,0	...6000,0	MHz	16,0	18,0	—	dB

Transfer Function(25˚C spec)

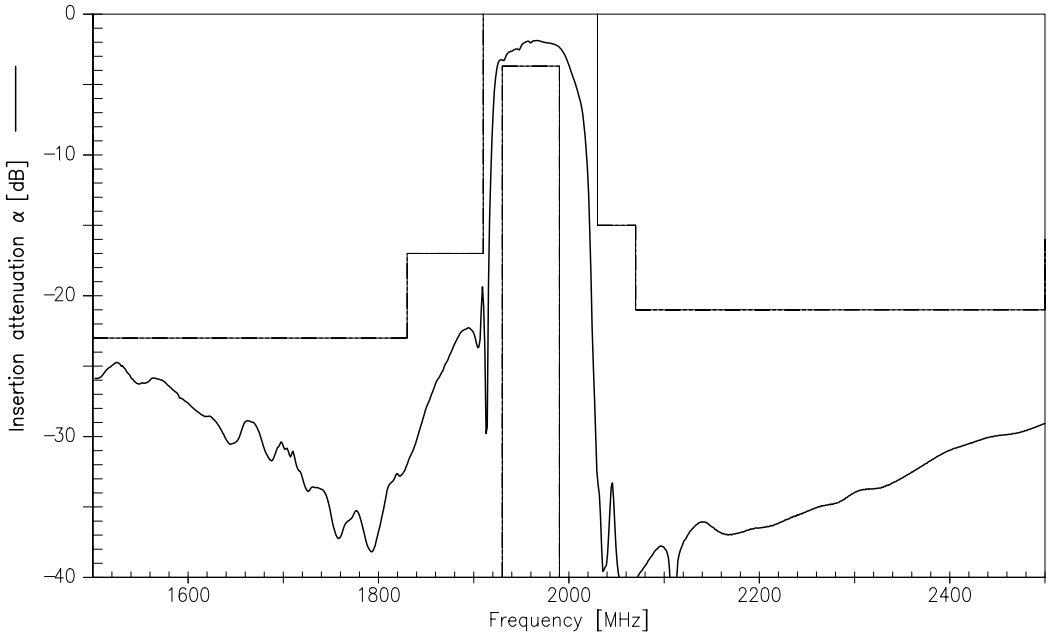

Transfer function (wideband)

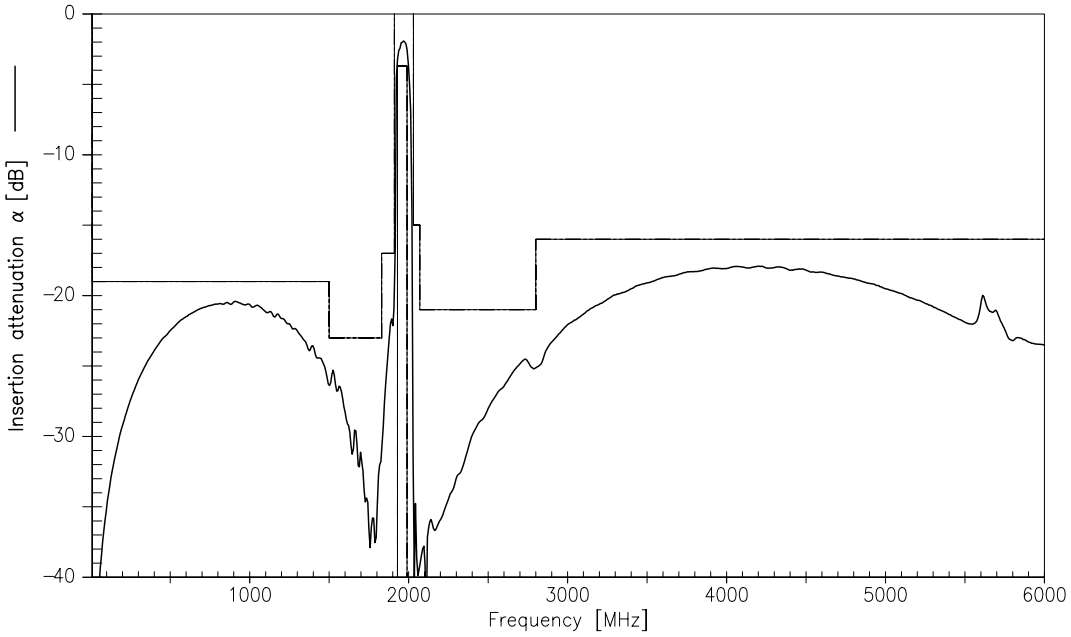

Reflection functions

S_{11}

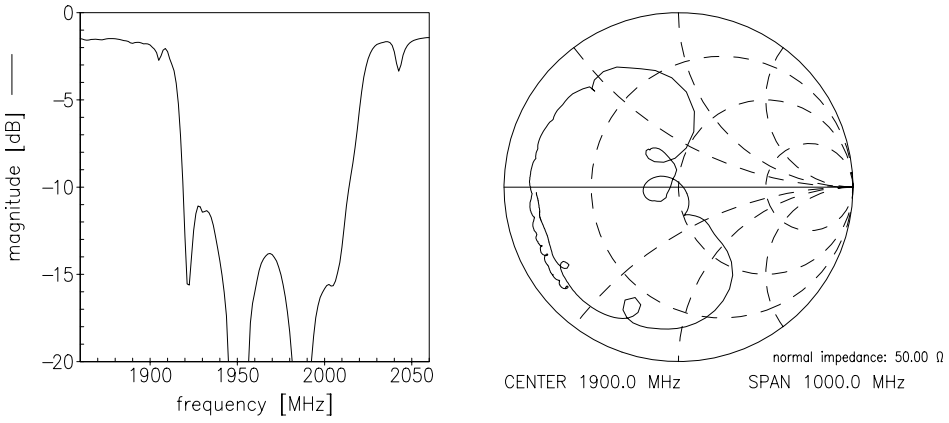

S_{22}

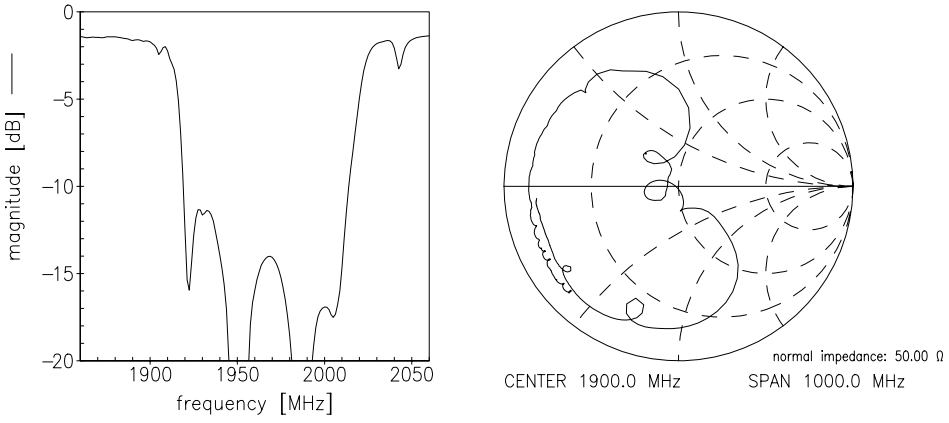

Published by EPCOS AG
Corporate Communications, P.O. Box 80 17 09, 81617 Munich, GERMANY
++49 89 636 09, FAX (0 89) 636-2 26 89

© EPCOS AG 2002. Reproduction, publication and dissemination of this brochure and the information contained therein without EPCOS' prior express consent is prohibited.

Purchase orders are subject to the General Conditions for the Supply of Products and Services of the Electrical and Electronics Industry recommended by the ZVEI (German Electrical and Electronic Manufacturers' Association), unless otherwise agreed.

This brochure replaces the previous edition.

For questions on technology, prices and delivery please contact the Sales Offices of EPCOS AG or the international Representatives.

Due to technical requirements components may contain dangerous substances. For information on the type in question please also contact one of our Sales Offices.