EPCOS

SAW Components

Data Sheet B7704



Data Sheet

Chip **S**ized **S**AW **P**ackage **DCS4C**

Features

- Low-loss RF filter for mobile telephone Cell systems, receive path
- Low amplitude ripple
- Usable passband 25 MHz
- Suitable for GPRS class 1 to12
- Package for Surface Mounted Technology (SMT)

Terminals

- Gold-plated Ni

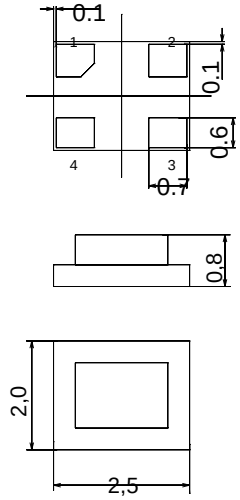

Dimensions in mm, approx. weight 0,015 g

Pin configuration

1	Input
3	Output
2, 4	Ground

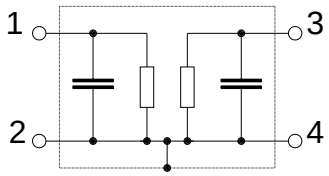

Type	Ordering code	Marking and Package according to	Packing according to
B7704	B39881-B7704-C510	C61157-A7-A80	F61074-V8104-Z000

Electrostatic **S**ensitive **D**evice (**ESD**)

Maximum ratings

Operating temperature range	T	– 30/+ 85	˚C	
Storage temperature range	T_{stg}	– 40/+ 85	˚C	
DC voltage	V_{DC}	5	V	
Input power at GSM850, GSM900, GSM1800 and GSM1900 Tx bands	P_{IN}	15	dBm	peak power of GSM signal, duty cycle 4:8

Characteristics

Operating temperature range: T = -20 to +80 °C
Terminating source impedance: Z_S = 50 Ω
Terminating load impedance: Z_L = 50 Ω

		min.	typ.	max.	
Center frequency	f_C	—	881,5	—	MHz
Maximum insertion attenuation	α_{max}				
869,0 ... 894,0 MHz		—	2,4	2,6	dB
Amplitude ripple (p-p)	$\Delta\alpha$				
869,0 ... 894,0 MHz		—	0,8	1,0	dB
Return loss					
869,0 ... 894,0 MHz		—	12,0	10,0	dB
Attenuation	α				
0,0 ... 780,0 MHz		45,0	62,0	—	dB
780,0 ... 840,0 MHz		45,0	55,0	—	dB
840,0 ... 851,0 MHz		38,0	40,0	—	dB
914,0 ... 924,0 MHz		24,0	26,0	—	dB
924,0 ... 950,0 MHz		35,0	40,0	—	dB
950,0 ... 997,0 MHz		35,0	50,0	—	dB
997,0 ...2200,0 MHz		40,0	50,0	—	dB
2200,0 ...3000,0 MHz		35,0	42,0	—	dB
3000,0 ...4000,0 MHz		20,0	28,0	—	dB
4000,0 ...6000,0 MHz		10,0	18,0	—	dB
Tx band suppression	α				
824,0 ... 849,0 MHz		38,0	40,0	—	dB

Characteristics

Operating temperature range: T = -30 to +85 °C
Terminating source impedance: Z_S = 50 Ω
Terminating load impedance: Z_L = 50 Ω

		min.	typ.	max.	
Center frequency	f_C	—	881,5	—	MHz
Maximum insertion attenuation	α_{max}				
869,0 ... 894,0 MHz		—	2,5	2,7	dB
Amplitude ripple (p-p)	$\Delta\alpha$				
869,0 ... 894,0 MHz		—	0,9	1,1	dB
Return loss					
869,0 ... 894,0 MHz		—	12,0	10,0	dB
Attenuation	α				
0,0 ... 780,0 MHz		45,0	62,0	—	dB
780,0 ... 840,0 MHz		45,0	55,0	—	dB
840,0 ... 851,0 MHz		38,0	40,0	—	dB
914,0 ... 924,0 MHz		24,0	26,0	—	dB
924,0 ... 950,0 MHz		35,0	40,0	—	dB
950,0 ... 997,0 MHz		35,0	50,0	—	dB
997,0 ...2200,0 MHz		40,0	50,0	—	dB
2200,0 ...3000,0 MHz		35,0	42,0	—	dB
3000,0 ...4000,0 MHz		20,0	28,0	—	dB
4000,0 ...6000,0 MHz		10,0	18,0	—	dB
Tx band suppression	α				
824,0 ... 849,0 MHz		38,0	40,0	—	dB

Transfer function

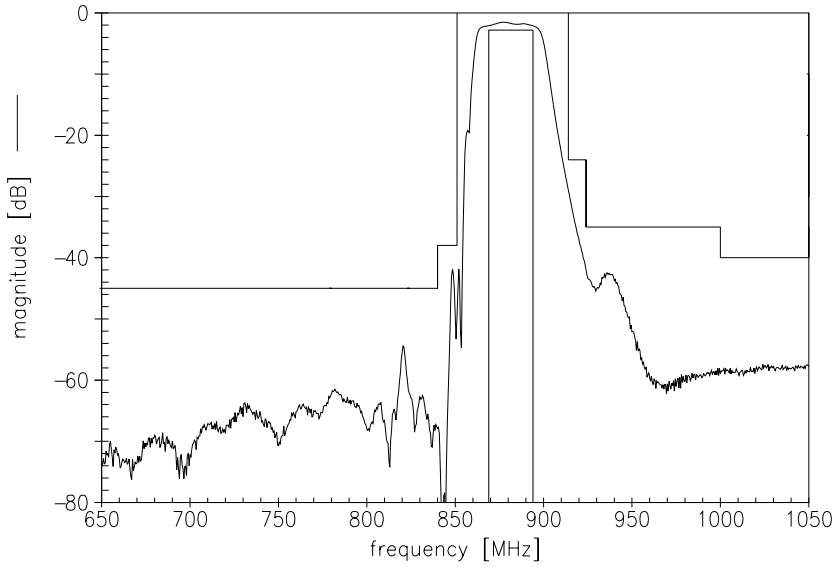

Transfer function (wideband)

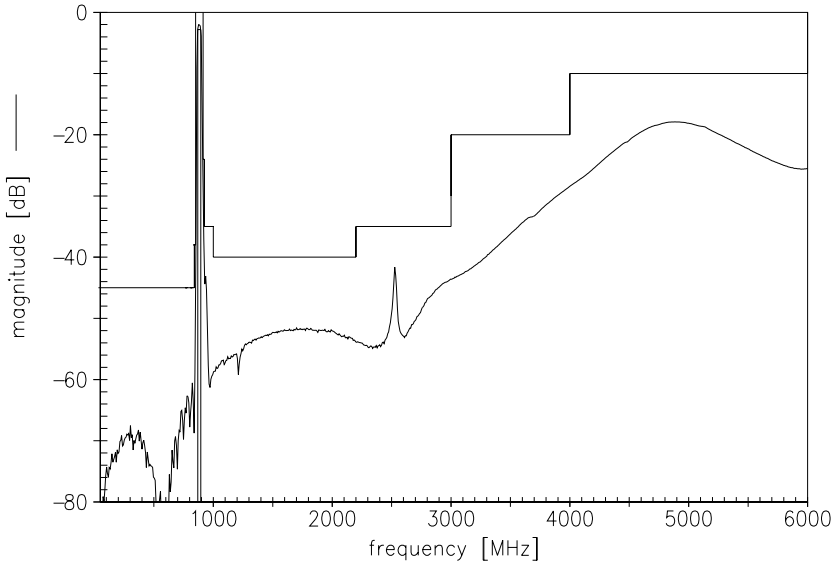

Reflection functions

S_{11}

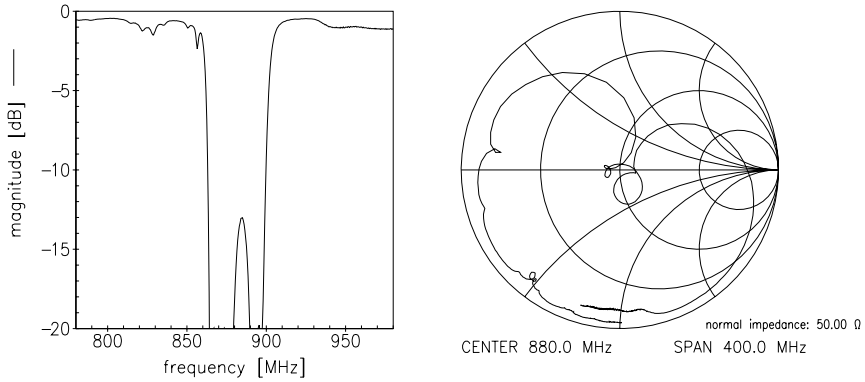

S_{22}

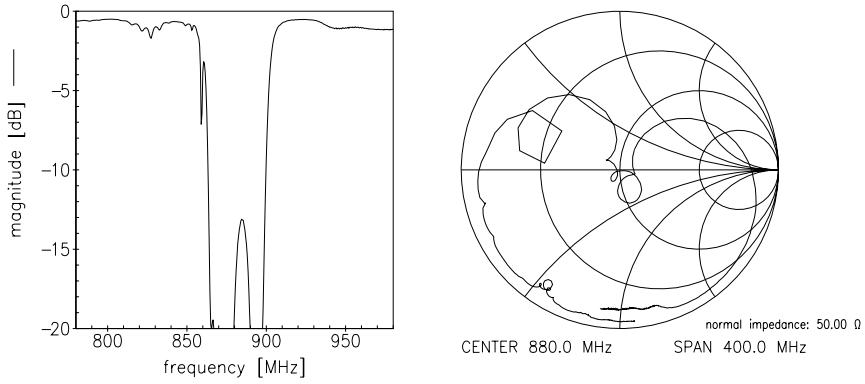

Published by EPCOS AG
Surface Acoustic Wave Components Division, SAW MC WT
P.O. Box 80 17 09, 81617 Munich, GERMANY

© EPCOS AG 2002. Reproduction, publication and dissemination of this brochure and the information contained therein without EPCOS' prior express consent is prohibited.

Purchase orders are subject to the General Conditions for the Supply of Products and Services of the Electrical and Electronics Industry recommended by the ZVEI (German Electrical and Electronic Manufacturers' Association), unless otherwise agreed.

This brochure replaces the previous edition.

For questions on technology, prices and delivery please contact the Sales Offices of EPCOS AG or the international Representatives.

Due to technical requirements components may contain dangerous substances. For information on the type in question please also contact one of our Sales Offices.