UNCONTROLLED DOCUMENT

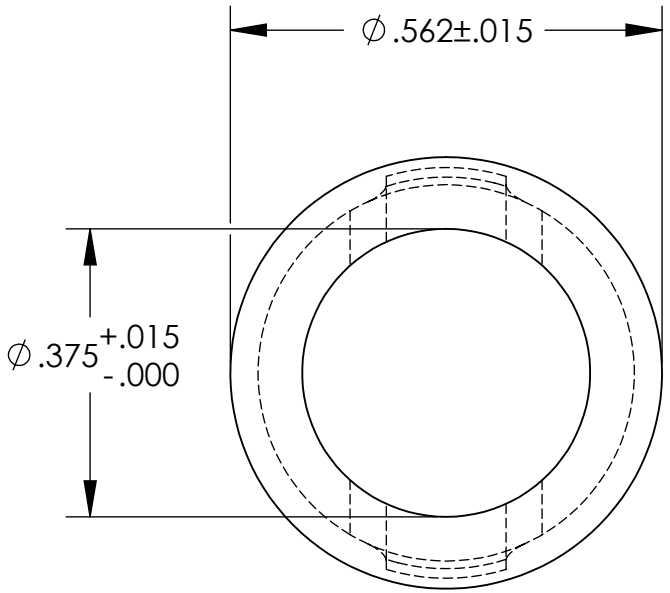

NOTES:
HOLE SIZE: .500
MAXIMUM PANEL THICKNESS: 1/16"
MATERIAL: HEAT STABILIZED NYLON 6; BLACK

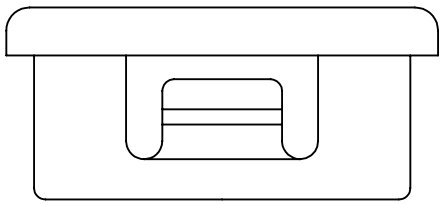

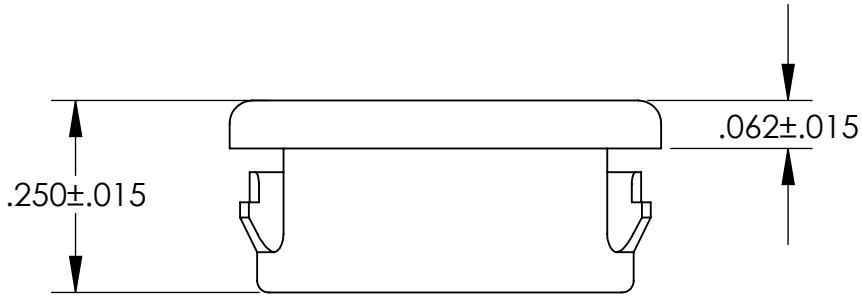

TOLERANCES UNLESS NOTED

±.005 ON DIMENSIONS THRU .625
±.008 ON DIMENSIONS .626 THRU 1.000
±.010 ON DIMENSIONS 1.001 THRU 1.500
±.015 ON DIMENSIONS LARGER THAN 1.500
±.015 ON FRACTIONAL DIMENSIONS

WE RESERVE THE RIGHT TO DISCONTINUE ITEMS, CHANGE SPECIFICATIONS OR DESIGN AT ANY TIME WITHOUT NOTICE AND WITHOUT INCURRING ANY OBLIGATIONS

PROPERTY OF
MICRO PLASTICS INC.

CATALOG DRAWING
MINIATURE INSULATING BUSHING
MICRO P/N 22MP01030
DWG. # 22MP01030
FILE SERVER\ENG\WEB

MATERIAL: AS NOTED

DATE	SCALE	
	1:1	JDD