UNCONTROLLED DOCUMENT

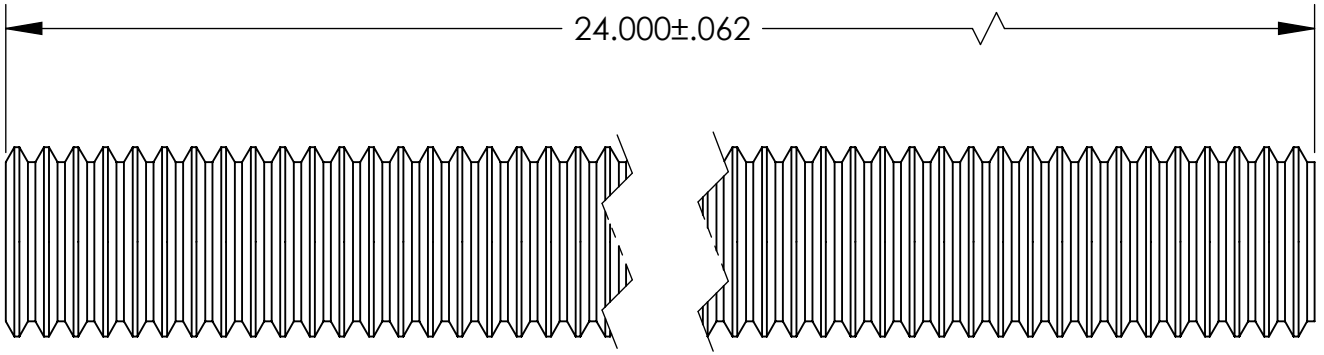

1/2" - 13 THREADS

TOLERANCES UNLESS NOTED

±.005 ON DIMENSIONS THRU .625
±.008 ON DIMENSIONS .626 THRU 1.000
±.010 ON DIMENSIONS 1.001 THRU 1.500
±.015 ON DIMENSIONS LARGER THAN 1.500
±.015 ON FRACTIONAL DIMENSIONS

WE RESERVE THE RIGHT TO DISCONTINUE ITEMS, CHANGE SPECIFICATIONS OR DESIGN AT ANY TIME WITHOUT NOTICE AND WITHOUT INCURRING ANY OBLIGATIONS

PROPERTY OF

MICRO PLASTICS INC.

CATALOG DRAWING
THREADED ROD
MICRO P/N 3850013TR
DWG. # 3850013TR
FILE SERVER\ENG\WEB

MATERIAL: NYLON 6/6

DATE	SCALE	
	2:1	TA