REV.	MODIFICATION.	DATE	DRN
01	PRODUCTION RELEASE	24/05/11	SF
02	CO2011158	22/06/11	SF
03	CO2011182	01/08/11	SF

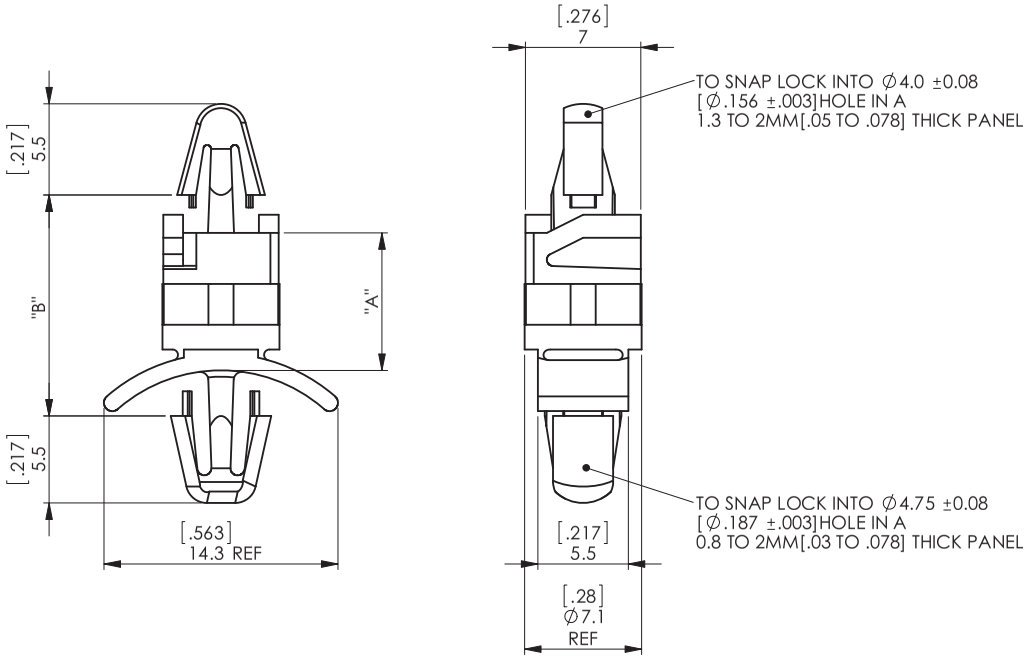

ALTERNATE UNITS FOR REFERENCE ONLY

NYLON 6/6 UL94 V-2 (RMS-01)	NYLON 6/6 UL94 V-0 (RMS-19)	"A" STANDOFF HEIGHT ±0.4	"B" (REF)
DLCBS4-3.5-01	DLCBS4-3.5-19	5.5 [.217]	10.8 [.425]
DLCBS4-4-01	DLCBS4-4-19	6.1 [.240]	11.4 [.449]
DLCBS4-5-01	DLCBS4-5-19	9.1 [358]	14.4 [.567]
DLCBS4-6-01	DLCBS4-6-19	12.4 [.488]	17.7 [.697]
DLCBS4-8-01	DLCBS4-8-19	18.8 [.740]	24.1 [.949]
DLCBS4-10-01	DLCBS4-10-19	21.9 [.862]	27.2 [1.071]

INFORMATION CONTAINED IN THIS DOCUMENT IS CONFIDENTIAL TO RICHCO INTERNATIONAL Co. Ltd. AND MAY NOT BE DISCLOSED OR REPRODUCED IN WHOLE OR PART WITHOUT THEIR WRITTEN CONSENT.

RICHCO, INC.
WWW.RICHCO-INC.COM

ALL DIMENSIONS IN mm
GENERAL TOLERANCES ±0.25
UNLESS OTHERWISE STATED
1 DECIMAL PLACE ±0.25
2 DECIMAL PLACES ± 0.10
ANGULAR ±1°

THIRD ANGLE

MATERIAL:	COLOUR:
SEE TABLE	NATURAL

DESCRIPTION:	PART No:
DUAL LOCKING CIRCUIT BOARD SUPPORT TYPE 4	DLCBS4

DRG No:	PROJECT NUMBER:	SHEET SIZE
011-058	EU10-0005	A4

DRN	DATE	CHKD	DATE	SCALE	SHEET No.
SF	24/05/11	TC	24/05/11	NTS	1 OF 1

FORM No. 0145/02