UNCONTROLLED DOCUMENT

NOTES:
MATERIAL; PVC SHELL WITH SPRING INSERT
COLOR; GREY
WIRE COMBINATION; MIN#20X1 +22X1 MAX#16X2
PACKAGED 100 PIECES PER BAG

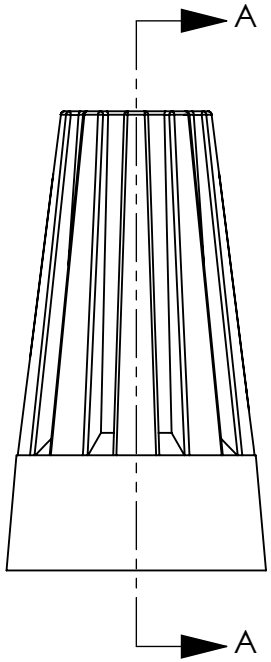

SECTION A-A

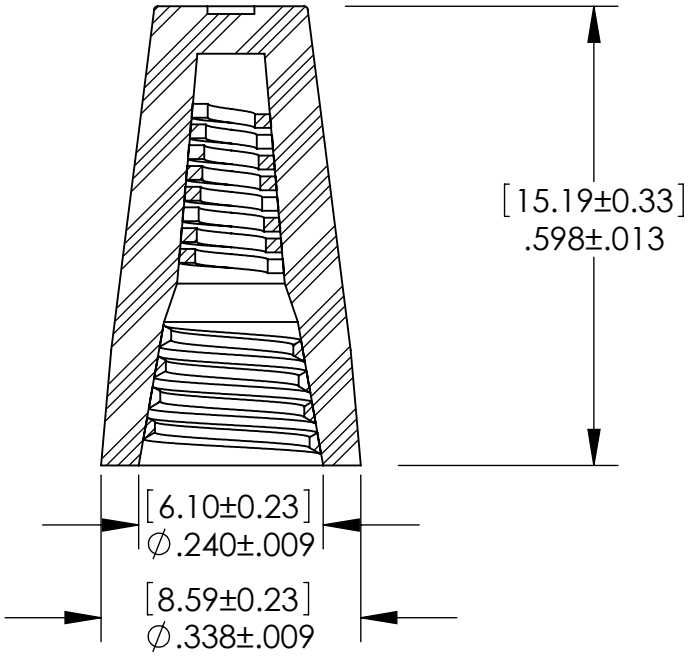

TOLERANCES UNLESS NOTED

±.005 ON DIMENSIONS THRU .625
±.008 ON DIMENSIONS .626 THRU 1.000
±.010 ON DIMENSIONS 1.001 THRU 1.500
±.015 ON DIMENSIONS LARGER THAN 1.500
±.015 ON FRACTIONAL DIMENSIONS

WE RESERVE THE RIGHT TO DISCONTINUE ITEMS, CHANGE SPECIFICATIONS OR DESIGN AT ANY TIME WITHOUT NOTICE AND WITHOUT INCURRING ANY OBLIGATIONS

PROPERTY OF
MICRO PLASTICS INC.

CATALOG DRAWING
SCREW ON WIRE CONNECTORS
MICRO P/N NM22SWC71
DWG. # NM22SWC71
FILE SERVER\ENG\WEB

MATERIAL: AS NOTED

DATE	SCALE	
	4:1	DSB