UNCONTROLLED DOCUMENT

NOTES:
INSERT COPPER-TIN PLATED
WIRE SIZE AWG 12-10

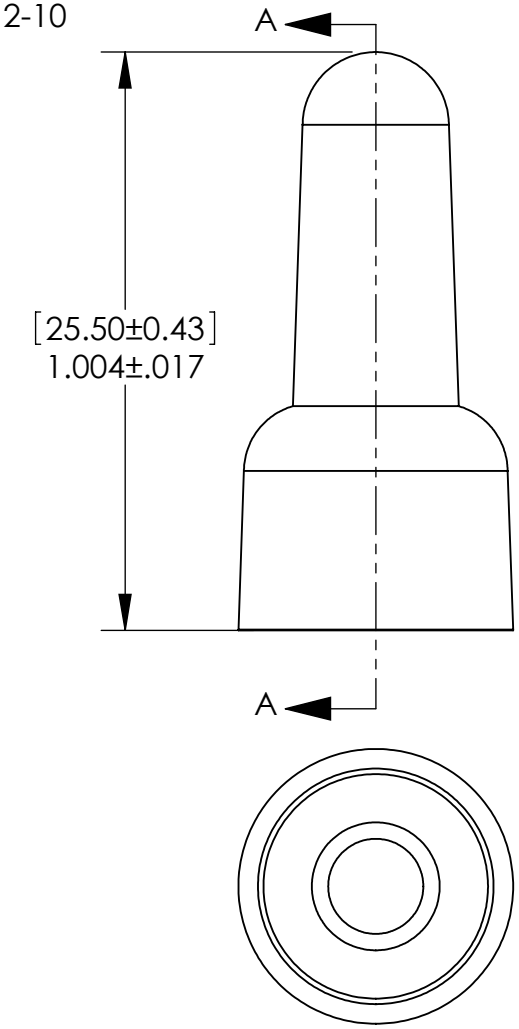

SECTION A-A

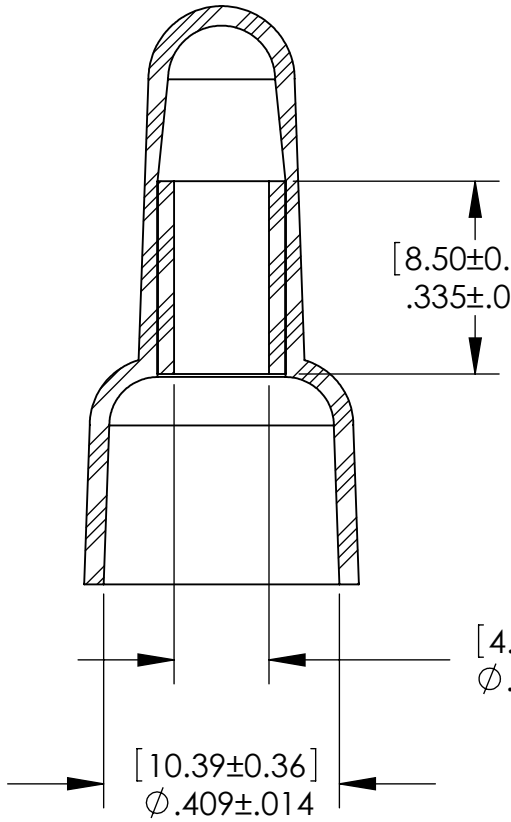

TOLERANCES UNLESS NOTED

±.005 ON DIMENSIONS THRU .625
±.008 ON DIMENSIONS .626 THRU 1.000
±.010 ON DIMENSIONS 1.001 THRU 1.500
±.015 ON DIMENSIONS LARGER THAN 1.500
±.015 ON FRACTIONAL DIMENSIONS

WE RESERVE THE RIGHT
TO DISCONTINUE ITEMS,
CHANGE SPECIFICATIONS
OR DESIGN AT ANY TIME
WITHOUT NOTICE AND
WITHOUT INCURRING
ANY OBLIGATIONS

PROPERTY OF

MICRO PLASTICS INC.

CATALOG DRAWING
CLOSED END WIRE CONNECTOR
MICRO P/N NM22WC05
DWG. # NM22WC05
FILE SERVER\ENG\WEB

MATERIAL: NYLON 6/6

DATE	SCALE	
	3:1	DSB