REV.	MODIFICATION.	DATE	DRN
01	PRODUCTION RELEASE	28/09/07	SF

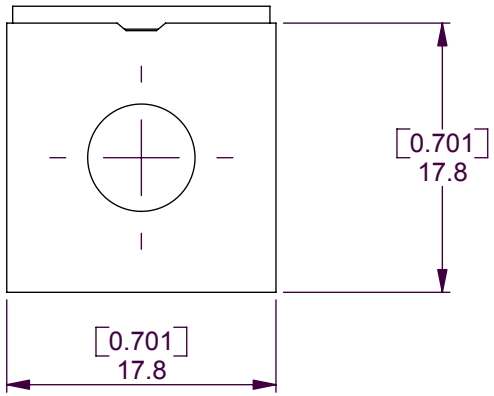

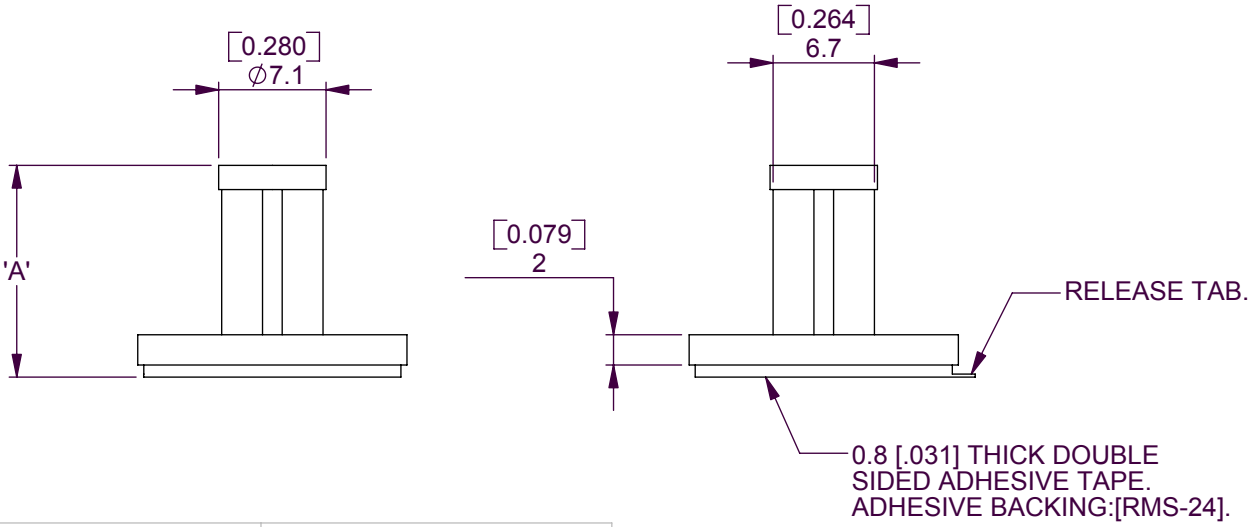

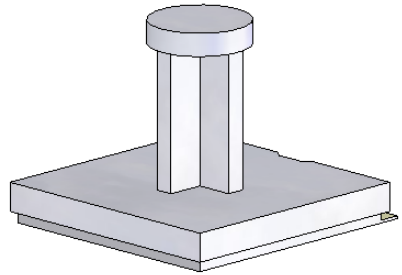

NOTES
1a) METRIC PRIMARY UNITS:mm
1b) IMPERIAL SECONDARY UNITS: [inches]
2) Parts are available in UL94V2 Nylon 6/6, RMS-01 and UL94 V0 Nylon 6/6, RMS-19. To order, replace XX with 01 or 19.

PART No.	'A' DIM ±0.4 [.015]
PSB-16M-XXA2-RT	16 [.629]
PSB-14M-XXA2-RT	14 [.551]
PSB-12M-XXA2-RT	12 [.472]
PSB-10M-XXA2-RT	10 [.393]
PSB-8M-XXA2-RT	8 [.314]
PSB-6M-XXA2-RT	6 [.236]

INFORMATION CONTAINED IN THIS DOCUMENT IS CONFIDENTIAL TO RICHCO INTERNATIONAL Co. Ltd. AND MAY NOT BE DISCLOSED OR REPRODUCED IN WHOLE OR PART WITHOUT THEIR WRITTEN CONSENT.

Richco®

GENERAL TOLERANCES ±0.25 [0.010]
UNLESS OTHERWISE STATED
1 DECIMAL PLACE ±
2 DECIMAL PLACES ±
ANGULAR ±1°

THIRD ANGLE

MATERIAL:	COLOUR:
SEE NOTE 2	NATURAL
DESCRIPTION: SPACER SUPPORT ON ADHESIVE BASE	PART No: SEE TABLE
DRG No: 07-022 / NPR No: 2007-031	SHEET SIZE A4

DRN	DATE	CHKD	DATE	SCALE	SHEET No.
NJB	08/03/07	TC	08/03/07	NTS	1 OF 1