

Is Now Part of



ON Semiconductor®

To learn more about ON Semiconductor, please visit our website at
www.onsemi.com

Please note: As part of the Fairchild Semiconductor integration, some of the Fairchild orderable part numbers will need to change in order to meet ON Semiconductor's system requirements. Since the ON Semiconductor product management systems do not have the ability to manage part nomenclature that utilizes an underscore (_), the underscore (_) in the Fairchild part numbers will be changed to a dash (-). This document may contain device numbers with an underscore (_). Please check the ON Semiconductor website to verify the updated device numbers. The most current and up-to-date ordering information can be found at www.onsemi.com. Please email any questions regarding the system integration to Fairchild_questions@onsemi.com.

ON Semiconductor and the ON Semiconductor logo are trademarks of Semiconductor Components Industries, LLC dba ON Semiconductor or its subsidiaries in the United States and/or other countries. ON Semiconductor owns the rights to a number of patents, trademarks, copyrights, trade secrets, and other intellectual property. A listing of ON Semiconductor's product/patent coverage may be accessed at www.onsemi.com/site/pdf/Patent-Marking.pdf. ON Semiconductor reserves the right to make changes without further notice to any products herein. ON Semiconductor makes no warranty, representation or guarantee regarding the suitability of its products for any particular purpose, nor does ON Semiconductor assume any liability arising out of the application or use of any product or circuit, and specifically disclaims any and all liability, including without limitation special, consequential or incidental damages. Buyer is responsible for its products and applications using ON Semiconductor products, including compliance with all laws, regulations and safety requirements or standards, regardless of any support or applications information provided by ON Semiconductor. "Typical" parameters which may be provided in ON Semiconductor data sheets and/or specifications can and do vary in different applications and actual performance may vary over time. All operating parameters, including "Typicals" must be validated for each customer application by customer's technical experts. ON Semiconductor does not convey any license under its patent rights nor the rights of others. ON Semiconductor products are not designed, intended, or authorized for use as a critical component in life support systems or any FDA Class 3 medical devices or medical devices with a same or similar classification in a foreign jurisdiction or any devices intended for implantation in the human body. Should Buyer purchase or use ON Semiconductor products for any such unintended or unauthorized application, Buyer shall indemnify and hold ON Semiconductor and its officers, employees, subsidiaries, affiliates, and distributors harmless against all claims, costs, damages, and expenses, and reasonable attorney fees arising out of, directly or indirectly, any claim of personal injury or death associated with such unintended or unauthorized use, even if such claim alleges that ON Semiconductor was negligent regarding the design or manufacture of the part. ON Semiconductor is an Equal Opportunity/Affirmative Action Employer. This literature is subject to all applicable copyright laws and is not for resale in any manner.

FAIRCHILD SEMICONDUCTOR®

January 2012

FT10001
Reset Timer with Fixed Delay and Reset Pulse

Features

- Fixed Reset Delay: 10 Seconds
- One Input Reset Pin
- Open-Drain Output Pin with Fixed 530ms Pulse
- 1.8V to 5.0V Operation (T_A=-40°C to +85°C)
- 1.7V to 5.0V Operation (T_A=-25°C to +85°C)
- 1.65V to 5.00V Operation (T_A=0°C to +85°C)
- <1µA I_{CCQ} Consumption
- Zero-Second Test-Mode Enable
- Integrated Pull-Up Resistor on /SRO

Applications

- Cell Phones
- Portable Media Players
- Tablets
- Mobile Devices
- Consumer Medical

Description

The FT10001 is a timer for resetting a mobile device where long reset times are needed. The long delay helps avoid unintended resets caused by accidental key presses. It has a fixed delay of 10 ±20% seconds. The DSR pin enables Test Mode operation by immediately forcing /RST1 LOW for factory testing.

The FT10001 has one input for single-button resetting capability. The device has a single open-drain output with 0.5mA pull-down drive.

FT10001 draws minimal I_{CC} current when inactive and functions over a power supply range of 1.65V to 5.00V.

Ordering Information

Part Number	Operating Temperature Range	Package	Packing Method
FT10001L6X	-40°C to +85°C	6-Lead, MicroPak™ 1.0 x 1.45mm, JEDEC MO-252	5000 Units on Tape and Reel
FT10001FHX	-40°C to +85°C	6-Lead, MicroPak2™ 1.0 x 1.0mm Body, .35mm Pitch	5000 Units on Tape and Reel

© 2011 Fairchild Semiconductor Corporation

Block Diagram

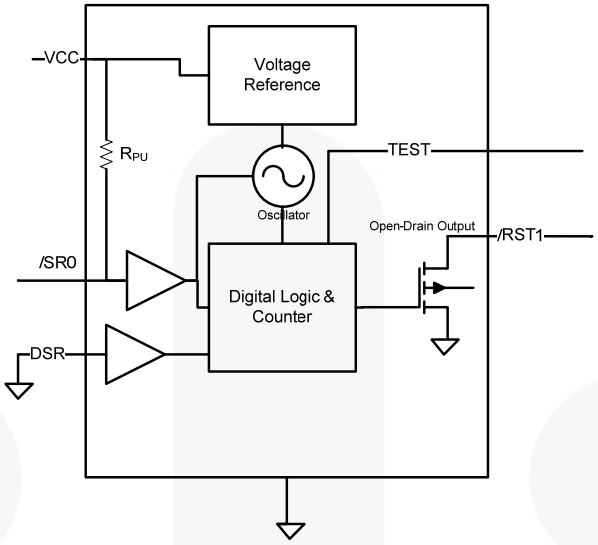

Figure 1. Block Diagram

Pin Configuration

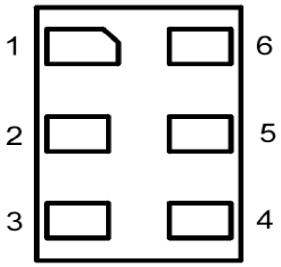

Figure 2. Pad Assignments (Top-Through View)

Pin Definitions

Pin #	Name	Description	
		Normal Operation	Zero-Second Factory-Test Mode
1	/RST1	Open-drain output, active LOW	Open-drain output, active LOW
2	GND	GND	GND
3	/SR0	Reset input with integrated pull-up, active LOW	Reset input with integrated pull-up, active LOW
4	VCC	Power supply	Power supply
5	DSR	Delay selection input; tie to GND during normal operation.(1)	Delay selection input. Pull HIGH to enable Zero-second delay for factory test.
6	TEST	Used for device testing; tie to GND during normal operation.	Used for device testing; tie to GND during normal operation.

Note:
1. This pin must always be tied to either GND or VCC. It must not float.

© 2011 Fairchild Semiconductor Corporation

Absolute Maximum Ratings

Stresses exceeding the absolute maximum ratings may damage the device. The device may not function or be operable above the recommended operating conditions and stressing the parts to these levels is not recommended. In addition, extended exposure to stresses above the recommended operating conditions may affect device reliability. The absolute maximum ratings are stress ratings only.

Symbol	Parameter	Condition	Min.	Max.	Unit
V_{CC}	Supply Voltage		-0.5	7.0	V
V_{IN}	DC Input Voltage	/SR0, DSR	-0.5	7.0	V
V_{OUT}	Output Voltage[(2)]	/RST1	-0.5	7.0	V
I_{IK}	DC Input Diode Current	V_{IN} < 0V		-50	mA
I_{OK}	DC Output Diode Current	V_{OUT} < 0V		-50	mA
I_{OL}	DC Output Sink Current			+50	mA
I_{CC}	DC V_{CC} or Ground Current per Supply Pin			±100	mA
T_{STG}	Storage Temperature Range		-65	+150	°C
T_J	Junction Temperature Under Bias			+150	°C
T_L	Junction Lead Temperature, Soldering 10 Seconds			+260	°C
P_D	Power Dissipation			5	mW
ESD	Electrostatic Discharge Capability	Human Body Model, JESD22-A114		4	kV
		Charged Device Model, JESD22-C101		2	

Note:
2. All output current Absolute Maximum Ratings must be observed.

Recommended Operating Conditions

The Recommended Operating Conditions table defines the conditions for actual device operation. Recommended operating conditions are specified to ensure optimal performance to the datasheet specifications. Fairchild does not recommend exceeding them or designing to Absolute Maximum Ratings.

Symbol	Parameter	Condition	Min.	Max.	Unit
V_{CC}	Supply Voltage	-40°C to +85°C	1.8	5.0	V
		-25°C to +85°C	1.7	5.0	
		0°C to +85°C	1.65	5.00	
t_{RFC}	V_{CC} Recovery Time After Power Down	V_{CC}=0V After Power Down, Rising to 0.5V	5		ms
V_{IN}	Input Voltage	/SR0	0	5	V
V_{OUT}	Output Voltage	/RST1	0	5	V
I_{OL}	DC Output Sink Current	/RST1, V_{CC}=2.0V to 5.0V		+0.5	mA
T_A	Free-Air Operating Temperature		-40	+85	°C
Θ_{JA}	Thermal Resistance			350	°C/W

© 2011 Fairchild Semiconductor Corporation

DC Electrical Characteristics

Conditions of T_A=-40°C to 80°C with V_{CC}=1.8V - 5.0V OR T_A=-25°C to 85°C with V_{CC}=1.7V – 5.0V OR T_A=0°C to 85°C with V_{CC}=1.65V – 5.00V produce the performance characteristics below.

Symbol	Parameter	Condition	Min.	Typ.	Max.	Unit
V_{IH}	Input High Voltage	DSR, /SR0	0.65 x V_{CC}			V
V_{IL}	Input Low Voltage	DSR, /SR0			0.25 x V_{CC}	V
V_{OL}	Low Level Output Voltage	RST, I_{OL}=500µA			0.3	V
R_{PU}	Integrated Pull-Up Resistor on /SR0			50		kΩ
I_{IN}	Input Leakage Current /SR0	V_{IN}= V_{CC}			±1	µA
	Input Leakage Current DSR	0V ≤ V_{IN} ≤ 5.0V			±1	
I_{CC}	Quiescent Supply Current (Timer Inactive)	/SR0=V_{CC}			1	µA
	Dynamic Supply Current (Timer Active)	/SR0=0V			200	

AC Electrical Characteristics

Conditions of T_A=-40°C to 80°C with V_{CC}=1.8V - 5.0V OR T_A=-25°C to 85°C with V_{CC}=1.7V – 5.0V OR T_A=0°C to 85°C with V_{CC}=1.65V – 5.00V produce the performance characteristics below.

Symbol	Parameter	Condition	Min.	Typ.	Max.	Unit
t_{PHL1}	Timer Delay, /SR0 to RST (DSR=0)	C_L=5pF, R_L=5KΩ, *See Figure 4*	8	10	12	s
t_{REC}	Reset Timeout Delay		420	530	635	ms

Capacitance Specifications

T_A=+25°C.

Symbol	Parameter	Condition	Typ.	Unit
C_{IN}	Input Capacitance	V_{CC}=GND	4	pF
C_{OUT}	Output Capacitance	V_{CC}=5.0V	5	pF

© 2011 Fairchild Semiconductor Corporation

Functional Description

Default operation time N is 10s. If the DSR pin is pulled HIGH prior to V_{CC} ramp, the FT10001 enters Test Mode and the reset output, /RST1, is immediately pulled LOW for factory testing. The DSR pin MUST be forced to GND during normal operation. The DSR pin should never be driven HIGH or left to FLOAT during normal operation. The DSR PIN state should never be changed during device operation; it must be biased prior to supplying the V_{CC} supply. If there is a need to use the DSR=VCC Test Mode, the /SR0 must be HIGH when the DSR pin is moved from LOW to HIGH to enter Zero-Second Factory-Test Mode. To return to the standard 10-second reset time, the same procedure must be followed with DSR=GND. The DSR pin should never be allowed to change state while the /SR0 pin is LOW.

Operation Modes

A low input signal on /SR0 starts the oscillator. There are two scenarios for counting: short duration and long duration. In the short-duration scenario, output /RST1 is not affected. In the long-duration scenario, the output /RST1 goes LOW after /SR0 has been held LOW for ≥10s. The /RST1 output returns to its original HIGH state 530ms after time t_{REC} has expired, regardless of the state of /SR0. The /RST1 output is an open-drain driver. When the count time exceeds time 10s, the /RST1 output pulls LOW.

Short Duration (t_W < 10s)
When the /SR0 input goes LOW, the internal timer starts counting. If the /SR0 input goes HIGH before 10s has elapsed, the timer stops counting and resets and no changes occur on the outputs.

Long Duration (t_W > 10s)
When the /SR0 input goes LOW, the internal timer starts counting. If the /SR0 input stays LOW for at least 10s, the RST output is enabled and pulled LOW. The output RST is held LOW for t_{REC}, 530ms, as soon as the reset time of 10s is met, regardless of the state of the /SR0 pin. When the /SR0 input has returned HIGH and t_{REC} has expired, the internal timer resets and awaits the next RESET event.

Zero-Second Test Mode
/RST1 goes LOW immediately after /SR0 goes LOW.

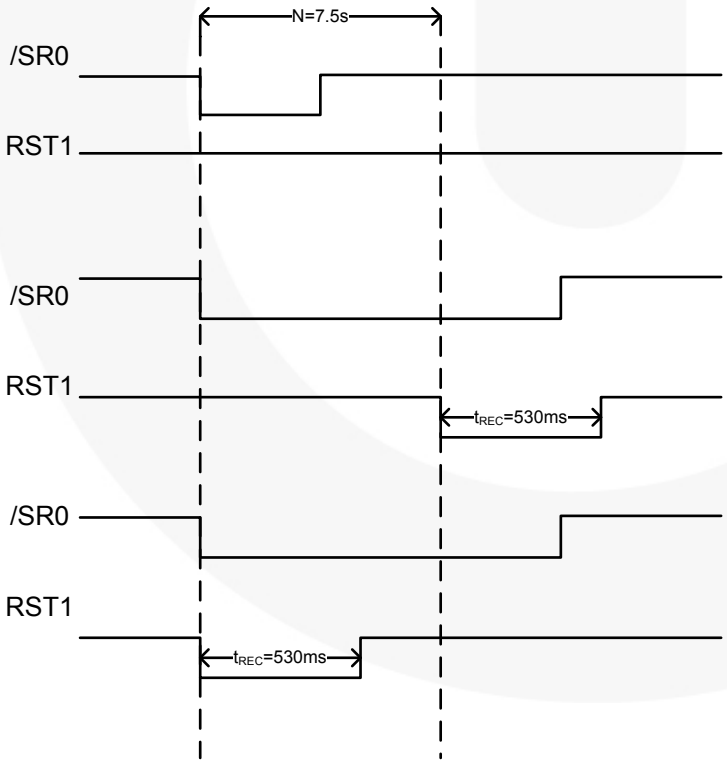

Short-Duration, Normal Operation
/RST1 never goes LOW because /SR0 LOW duration does not meet requirement: Reset Time N=10s

Long-Duration, Normal Operation
/RST1 goes LOW because /SR0 LOW duration exceeds requirement: Reset Time N=10s

Zero-Second Factory-Test Mode
/RST1 goes LOW immediately after /SR0 goes LOW

Figure 3. Reset Timing Waveforms

© 2011 Fairchild Semiconductor Corporation

AC Test Circuit and Waveforms

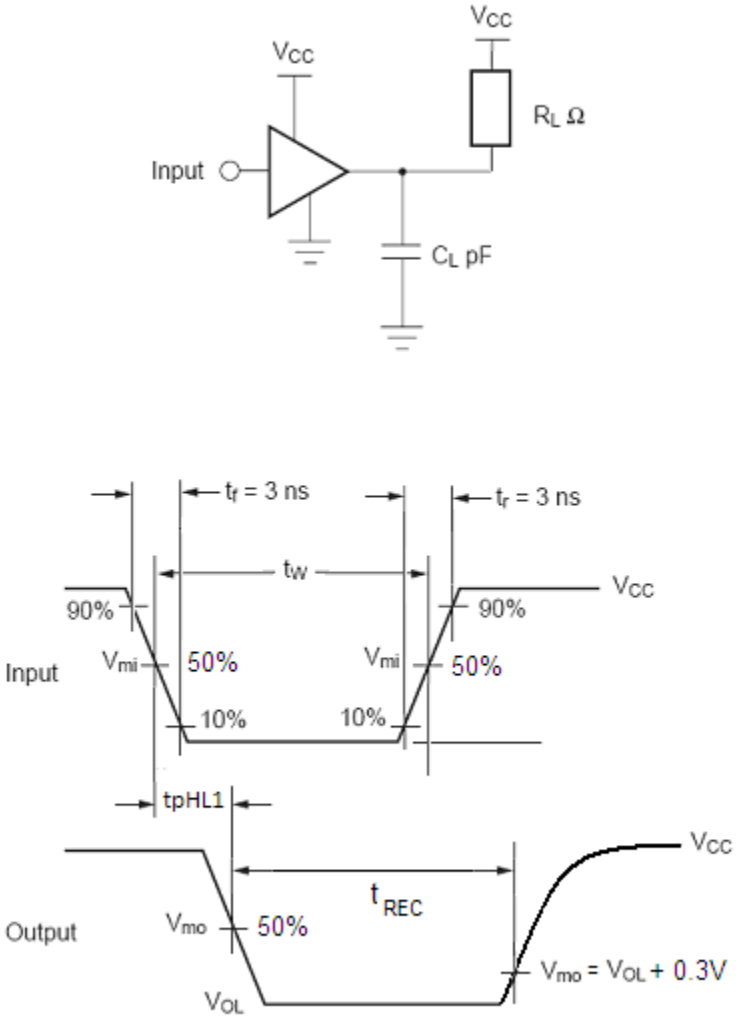

Figure 4. AC Test Circuit and Waveforms for /RST1 Output ST Output

Physical Dimensions

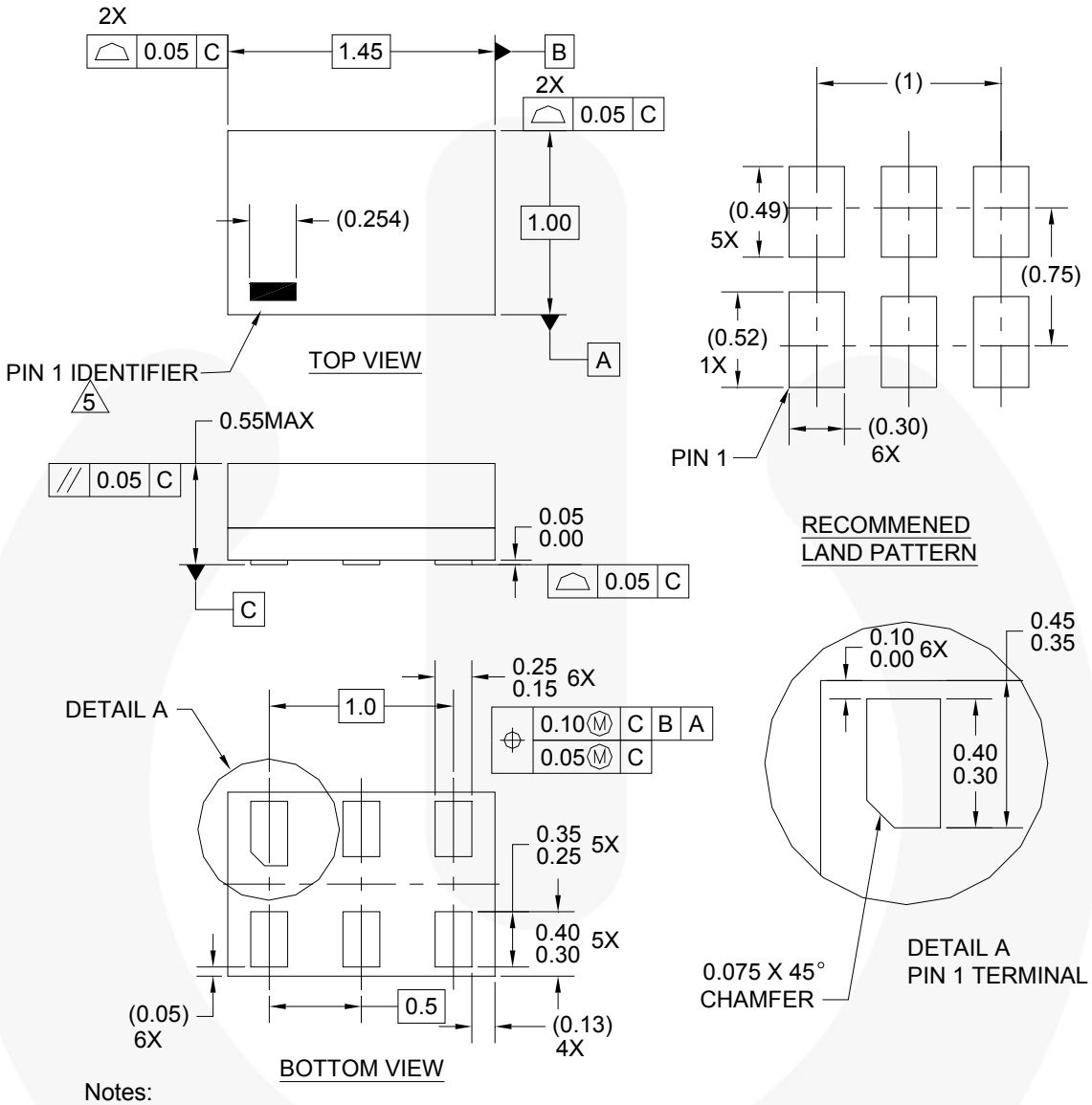

Notes:

1. CONFORMS TO JEDEC STANDARD M0-252 VARIATION UAAD
2. DIMENSIONS ARE IN MILLIMETERS
3. DRAWING CONFORMS TO ASME Y14.5M-1994
4. FILENAME AND REVISION: MAC06AREV4
5. PIN ONE IDENTIFIER IS 2X LENGTH OF ANY OTHER LINE IN THE MARK CODE LAYOUT.

Figure 5. 6-Lead MicroPak™ 1.0 x 1.45mm, JEDEC MO-252

Package drawings are provided as a service to customers considering Fairchild components. Drawings may change in any manner without notice. Please note the revision and/or date on the drawing and contact a Fairchild Semiconductor representative to verify or obtain the most recent revision. Package specifications do not expand the terms of Fairchild's worldwide terms and conditions, specifically the warranty therein, which covers Fairchild products.

Always visit Fairchild Semiconductor's online packaging area for the most recent package drawings:
http://www.fairchildsemi.com/packaging/.

© 2011 Fairchild Semiconductor Corporation

Physical Dimensions

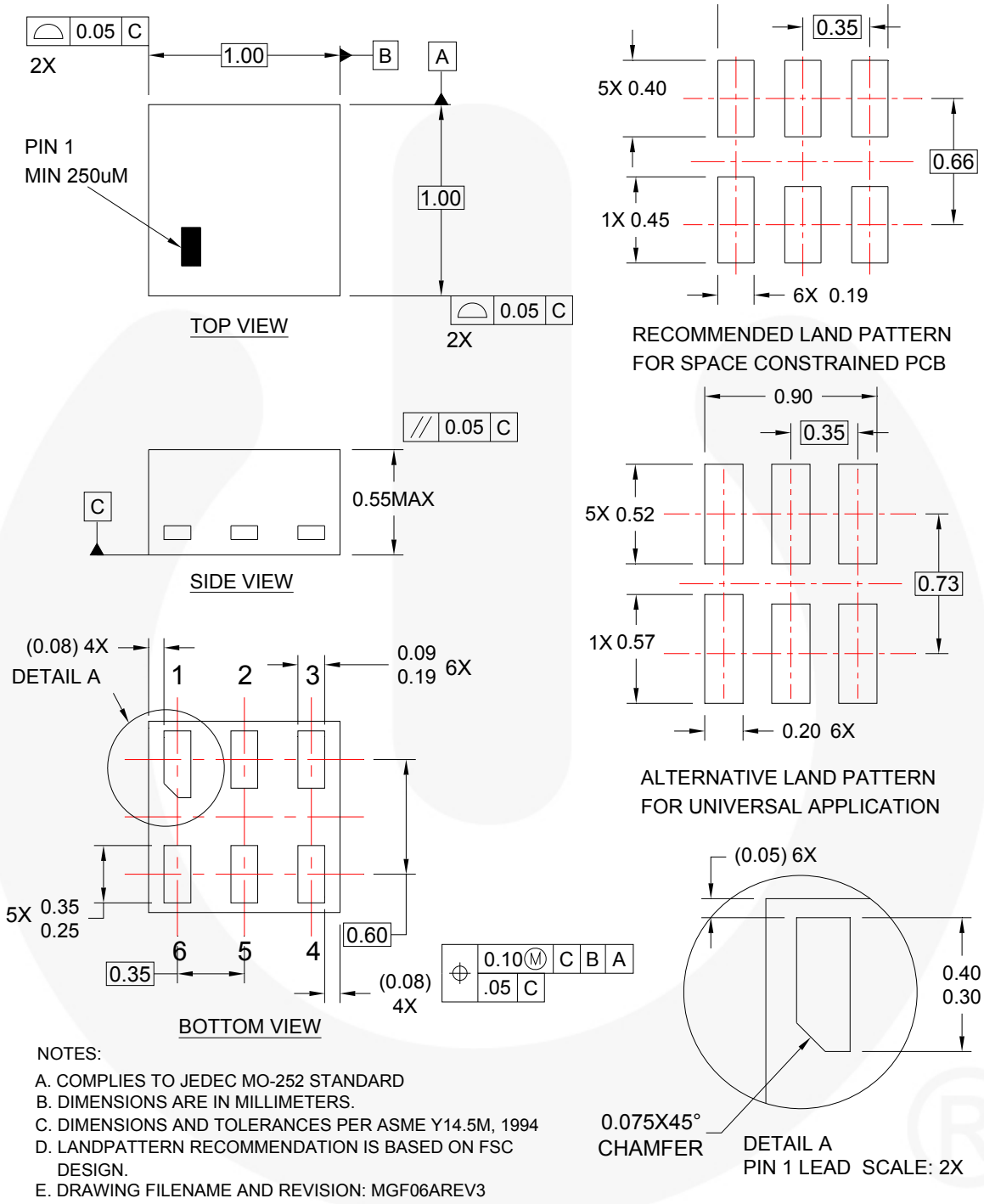

NOTES:

A. COMPLIES TO JEDEC MO-252 STANDARD
B. DIMENSIONS ARE IN MILLIMETERS.
C. DIMENSIONS AND TOLERANCES PER ASME Y14.5M, 1994
D. LANDPATTERN RECOMMENDATION IS BASED ON FSC DESIGN.
E. DRAWING FILENAME AND REVISION: MGF06AREV3

Figure 6. 6-Lead MicroPak2™ 1.0 x 1.0mm, .35mm Pitch

Package drawings are provided as a service to customers considering Fairchild components. Drawings may change in any manner without notice. Please note the revision and/or date on the drawing and contact a Fairchild Semiconductor representative to verify or obtain the most recent revision. Package specifications do not expand the terms of Fairchild's worldwide terms and conditions, specifically the warranty therein, which covers Fairchild products.

Always visit Fairchild Semiconductor's online packaging area for the most recent package drawings:
http://www.fairchildsemi.com/packaging/.

© 2011 Fairchild Semiconductor Corporation

FAIRCHILD SEMICONDUCTOR®

TRADEMARKS

The following includes registered and unregistered trademarks and service marks, owned by Fairchild Semiconductor and/or its global subsidiaries, and is not intended to be an exhaustive list of all such trademarks.

2Cool™
AccuPower™
AX-CAP™*
BitSiC™
Build it Now™
CorePLUS™
CorePOWER™
CROSSVOLT™
CTL™
Current Transfer Logic™
DEUXPEED®
Dual Cool™
EcoSPARK®
EfficientMax™
ESBC™
Fairchild®
Fairchild Semiconductor®
FACT Quiet Series™
FACT®
FAST®
FastvCore™
FETBench™
FlashWriter®*
FPS™
F-PFS™
FRFET®
Global Power Resource℠
GreenBridge™
Green FPS™
Green FPS™ e-Series™
G*max*™
GTO™
IntelliMAX™
ISOPLANAR™
Making Small Speakers Sound Louder and Better™
MegaBuck™
MICROCOUPLER™
MicroFET™
MicroPak™
MicroPak2™
MillerDrive™
MotionMax™
Motion-SPM™
mWSaver™
OptoHiT™
OPTOLOGIC®
OPTOPLANAR®
PowerTrench®
PowerXS™
Programmable Active Droop™
QFET®
QS™
Quiet Series™
RapidConfigure™
™
Saving our world, 1mW/W/kW at a time™
SignalWise™
SmartMax™
SMART START™
Solutions for Your Success™
SPM®
STEALTH™
SuperFET®
SuperSOT™-3
SuperSOT™-6
SuperSOT™-8
SupreMOS®
SyncFET™
Sync-Lock™
SYSTEM GENERAL®*
The Power Franchise®
the power franchise
TinyBoost™
TinyBuck™
TinyCalc™
TinyLogic®
TINYOPTO™
TinyPower™
TinyPWM™
TinyWire™
TranSiC™
TriFault Detect™
TRUECURRENT®*
μSerDes™
SerDes
UHC®
Ultra FRFET™
UniFET™
VCX™
VisualMax™
VoltagePlus™
XS™

* Trademarks of System General Corporation, used under license by Fairchild Semiconductor.

DISCLAIMER

FAIRCHILD SEMICONDUCTOR RESERVES THE RIGHT TO MAKE CHANGES WITHOUT FURTHER NOTICE TO ANY PRODUCTS HEREIN TO IMPROVE RELIABILITY, FUNCTION, OR DESIGN. FAIRCHILD DOES NOT ASSUME ANY LIABILITY ARISING OUT OF THE APPLICATION OR USE OF ANY PRODUCT OR CIRCUIT DESCRIBED HEREIN; NEITHER DOES IT CONVEY ANY LICENSE UNDER ITS PATENT RIGHTS, NOR THE RIGHTS OF OTHERS. THESE SPECIFICATIONS DO NOT EXPAND THE TERMS OF FAIRCHILD'S WORLDWIDE TERMS AND CONDITIONS, SPECIFICALLY THE WARRANTY THEREIN, WHICH COVERS THESE PRODUCTS.

LIFE SUPPORT POLICY

FAIRCHILD'S PRODUCTS ARE NOT AUTHORIZED FOR USE AS CRITICAL COMPONENTS IN LIFE SUPPORT DEVICES OR SYSTEMS WITHOUT THE EXPRESS WRITTEN APPROVAL OF FAIRCHILD SEMICONDUCTOR CORPORATION.

As used herein:

1. Life support devices or systems are devices or systems which, (a) are intended for surgical implant into the body or (b) support or sustain life, and (c) whose failure to perform when properly used in accordance with instructions for use provided in the labeling, can be reasonably expected to result in a significant injury of the user.
2. A critical component in any component of a life support, device, or system whose failure to perform can be reasonably expected to cause the failure of the life support device or system, or to affect its safety or effectiveness.

ANTI-COUNTERFEITING POLICY

Fairchild Semiconductor Corporation's Anti-Counterfeiting Policy. Fairchild's Anti-Counterfeiting Policy is also stated on our external website, www.fairchildsemi.com, under Sales Support.

Counterfeiting of semiconductor parts is a growing problem in the industry. All manufacturers of semiconductor products are experiencing counterfeiting of their parts. Customers who inadvertently purchase counterfeit parts experience many problems such as loss of brand reputation, substandard performance, failed applications, and increased cost of production and manufacturing delays. Fairchild is taking strong measures to protect ourselves and our customers from the proliferation of counterfeit parts. Fairchild strongly encourages customers to purchase Fairchild parts either directly from Fairchild or from Authorized Fairchild Distributors who are listed by country on our web page cited above. Products customers buy either from Fairchild directly or from Authorized Fairchild Distributors are genuine parts, have full traceability, meet Fairchild's quality standards for handling and storage and provide access to Fairchild's full range of up-to-date technical and product information. Fairchild and our Authorized Distributors will stand behind all warranties and will appropriately address any warranty issues that may arise. Fairchild will not provide any warranty coverage or other assistance for parts bought from Unauthorized Sources. Fairchild is committed to combat this global problem and encourage our customers to do their part in stopping this practice by buying direct or from authorized distributors.

PRODUCT STATUS DEFINITIONS

Definition of Terms

Datasheet Identification	Product Status	Definition
Advance Information	Formative / In Design	Datasheet contains the design specifications for product development. Specifications may change in any manner without notice.
Preliminary	First Production	Datasheet contains preliminary data; supplementary data will be published at a later date. Fairchild Semiconductor reserves the right to make changes at any time without notice to improve design.
No Identification Needed	Full Production	Datasheet contains final specifications. Fairchild Semiconductor reserves the right to make changes at any time without notice to improve the design.
Obsolete	Not In Production	Datasheet contains specifications on a product that is discontinued by Fairchild Semiconductor. The datasheet is for reference information only.

Rev. I61

© 2011 Fairchild Semiconductor Corporation

Revisions

Rev 0.0	8/1/11	Sean Ryan	Initial Rev – created from FT7521 datasheet
Rev 0.1	8/11/11	Sean Ryan	Updated the t_{REC} to align with reset time of 10sec.
Rev 0.2	8/24/11	Alvan Lam	Added micropak2 information and marketing drawing
Rev 0.3	8/25/11	Alvan Lam	Updated the NMOS symbol in block diagram
Rev 0.4	9/6/11	Alvan Lam	Created revision table instead of using Hidden Text
Rev 1.0.0	12/6/11	Alvan Lam	Changed ABS Max to 7V, initial datasheet released by Techdoc
Rev 1.0.1	12/14/11	Alvan Lam	Added 1.7/-25C condition to align FT7521 datasheet

© 2011 Fairchild Semiconductor Corporation



© 2011 Fairchild Semiconductor Corporation

ON Semiconductor and ON are trademarks of Semiconductor Components Industries, LLC dba ON Semiconductor or its subsidiaries in the United States and/or other countries. ON Semiconductor owns the rights to a number of patents, trademarks, copyrights, trade secrets, and other intellectual property. A listing of ON Semiconductor's product/patent coverage may be accessed at www.onsemi.com/site/pdf/Patent−Marking.pdf. ON Semiconductor reserves the right to make changes without further notice to any products herein. ON Semiconductor makes no warranty, representation or guarantee regarding the suitability of its products for any particular purpose, nor does ON Semiconductor assume any liability arising out of the application or use of any product or circuit, and specifically disclaims any and all liability, including without limitation special, consequential or incidental damages. Buyer is responsible for its products and applications using ON Semiconductor products, including compliance with all laws, regulations and safety requirements or standards, regardless of any support or applications information provided by ON Semiconductor. "Typical" parameters which may be provided in ON Semiconductor data sheets and/or specifications can and do vary in different applications and actual performance may vary over time. All operating parameters, including "Typicals" must be validated for each customer application by customer's technical experts. ON Semiconductor does not convey any license under its patent rights nor the rights of others. ON Semiconductor products are not designed, intended, or authorized for use as a critical component in life support systems or any FDA Class 3 medical devices or medical devices with a same or similar classification in a foreign jurisdiction or any devices intended for implantation in the human body. Should Buyer purchase or use ON Semiconductor products for any such unintended or unauthorized application, Buyer shall indemnify and hold ON Semiconductor and its officers, employees, subsidiaries, affiliates, and distributors harmless against all claims, costs, damages, and expenses, and reasonable attorney fees arising out of, directly or indirectly, any claim of personal injury or death associated with such unintended or unauthorized use, even if such claim alleges that ON Semiconductor was negligent regarding the design or manufacture of the part. ON Semiconductor is an Equal Opportunity/Affirmative Action Employer. This literature is subject to all applicable copyright laws and is not for resale in any manner.

PUBLICATION ORDERING INFORMATION

LITERATURE FULFILLMENT:
Literature Distribution Center for ON Semiconductor
19521 E. 32nd Pkwy, Aurora, Colorado 80011 USA
Phone: 303−675−2175 or 800−344−3860 Toll Free USA/Canada
Fax: 303−675−2176 or 800−344−3867 Toll Free USA/Canada
Email: orderlit@onsemi.com

N. American Technical Support: 800−282−9855 Toll Free USA/Canada
Europe, Middle East and Africa Technical Support:
Phone: 421 33 790 2910
Japan Customer Focus Center
Phone: 81−3−5817−1050

ON Semiconductor Website: **www.onsemi.com**

Order Literature: http://www.onsemi.com/orderlit

For additional information, please contact your local Sales Representative