FUJITSU

RECTANGULAR CONNECTORS

FCN360 Series *DISCONTINUED September 2020*

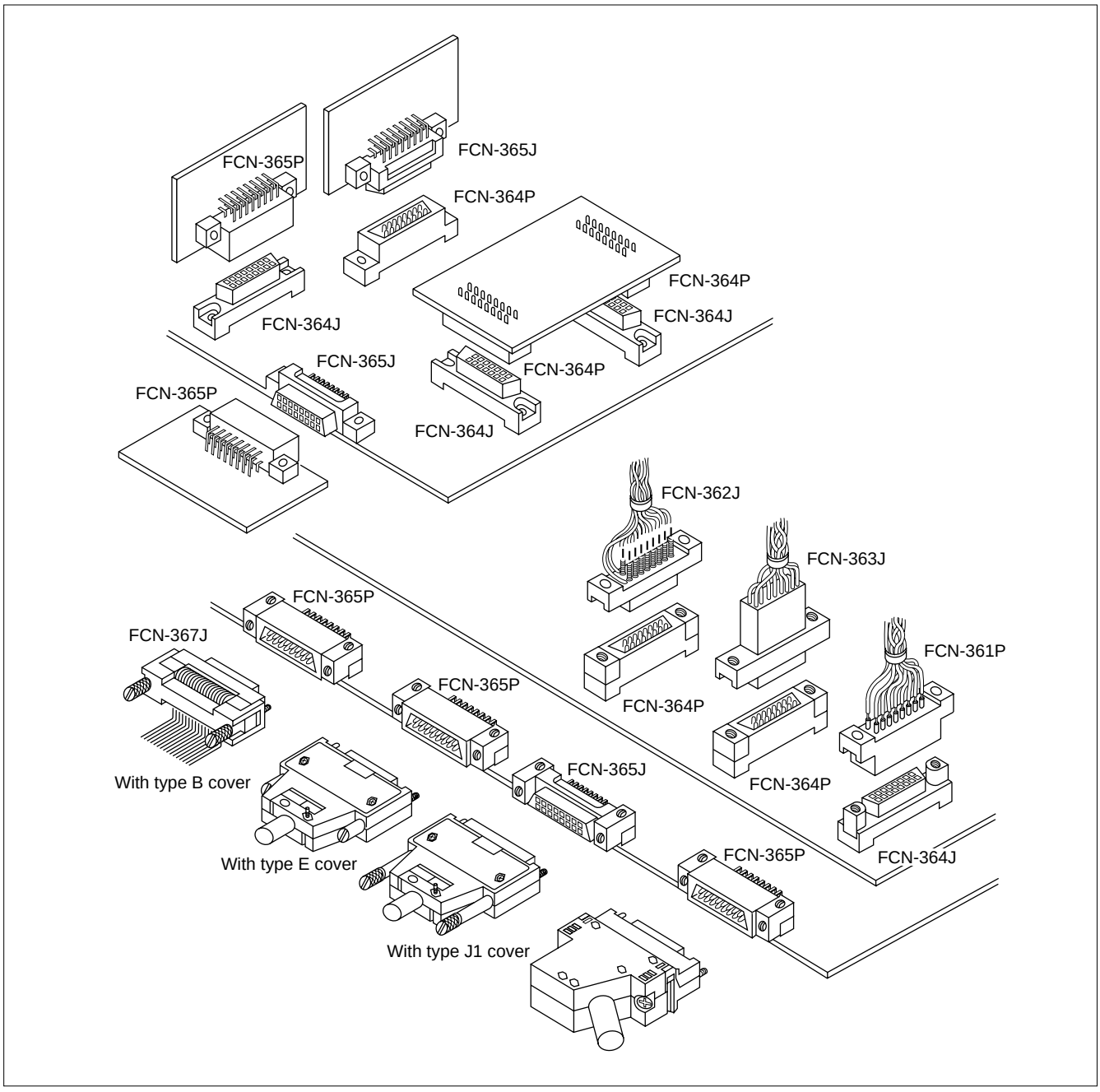

Terms in Selection Table (Example)

Model				700 series
Appearance				
Structure	Contact pitch			2.54 × 2.54
	Number of contacts			10, 14, 16, 20, 26, 30, 34, 40, 50, 60
	Pin type	Solder eyelet (tail shape)		—
		Wire-wrapping (post cross section)	P	□0.64
			J	—
		Crimping (applicable AWG No.)		—
		Straight, throughhole (PC board hole dimensions)		ϕ 0.8, 2.54 × 2.54
		Right-angle, throughhole (PC board hole dimensions)	P	ϕ 0.8, 2.54 × 2.54
			J	—
		IDC (applicable AWG No.)	P	#28, Flat cable
			J	#28, Flat cable
Plating	Gold			○
	Silver			—
	Tin			○
Specification	Operating temperature range			–55°C to +105°C
	Current rating			DC 1 A
	Voltage rating			AC 250 V
	Contact resistance			20 mΩ max. (DC 6 V, 0.1 A)
	Insulation resistance (DC 500 V)			1,000MΩ min.
	Dielectric withstanding voltage (for 1 minute)			AC 500 V
	Insulation material / cleaning with Chlorothene			Polyester / cleaning possible
Part number (example)				FCN-705P050-AU/M FCN-707J050-AU/B
Remarks				EMI protection cover provided

- **Contact pitch**
  Denotes a pitch between adjacent contacts or pitch between rows.
  2.54 mm (0.100 in.) (pitch between adjacent contacts) x 2.54 mm (0.100 in.) (pitch between rows)
- **Number of contacts**
  Denotes the numbers of contacts of available connectors.
- **Connection type**
  Denotes the connection type of the cable or PC board connection section.
- **Plating**
  Denotes the contact plating specification.
- **Specifications**
- **Operating temperature range**
  The connector can be used within the specified temperature range.
- **Current rating**
  Maximum current that can flow through one connector pin
- **Voltage rating**
  Maximum voltage that can be applied to a connector
- **Contact resistance**
  Resistance observed at the contact part when 0.3 A (or 0.1 A) flows at 6 VDC with the connectors mated
- **Insulation resistance**
  Resistance to the leakage current flowing through the insulator (inside or surface of the insulator) when 500 VDC is applied across adjacent pins of a connector
- **Dielectric withstanding voltage**
  Applying the indicated voltage across adjacent pins of a connector for one minute does not cause any abnormality (damage or cracks in insulator).
- **Insulating material, cleaning with chlorothene**
  Denotes the insulating material used, and indicates whether the insulating material can be cleaned with chlorothene.
- **Part number**
  Some part numbers are indicated as examples.

Rectanglar Connectors

Model				360 series
Appearance				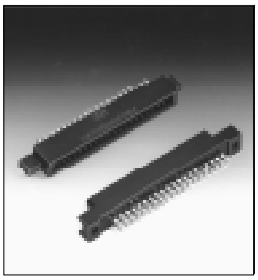
Structure	Contact pitch			2.54 × 2.54
	Number of contacts			8, 16, 24, 32, 40, 48, 56, 64
	Pin type	Solder eyelet (tail shape)	P	1.8 × 0.7
			J	1.8 × 0.7
		Wire-wrapping (post cross section)		Diagonal 0.71 mm (0.028 in.)
		Crimping (applicable AWG No.)	P	—
			J	AWG #22 to #28
		Straight, through hole (PC board hole dimensions)	P	ϕ1, 2.54 × 2.54
			J	ϕ1, 2.54 × 2.54
		Right-angle, through hole (PC board hole dimensions)	P	ϕ1, 2.54 × 2.54
			J	ϕ1, 2.54 × 2.54
		IDC (applicable AWG No.)	P	—
			J	#28, Flat cable
Plating	Gold			○
	Silver			○
	Tin			—
Specification	Operating temperature range			–55°C to +85°C
	Current rating			DC 3 A (IDC type: 1A)
	Voltage rating			AC 250 V
	Contact resistance			15 mΩ max. (DC 6 V, 0.3 A)
	Insulation resistance (DC 500 V)			1,000 MΩ min.
	Dielectric withstanding voltage (for 1 minute)			AC 500 V
	Insulating material			Polyester PC (363J)
Part number (example)				FCN-361P024-AU
Remarks				Cable cover provided

NOTES

RECTANGULAR CONNECTORS

FCN-360 SERIES

■ FEATURES

- Many applications
  Various connectors are available for connection by means of soldering, wire wrapping, crimping, PC board mounting, and insulation displacement connection (IDC). The user can choose a plug and jack combination that best meet each application.
- Small size for high-density mounting
  The connectors are small with a contact and terminal pitch of 2.54 mm (0.100 in.) between pins and between rows and are thus well suited for high-density mounting.
- Sturdy shell guide
  Sturdy shell guides are used to prevent mismating and to protect the pins.
- Excellent cost performance
  Streamlined design and automated manufacturing, including use of partial solder plating, provide excellent cost performance.

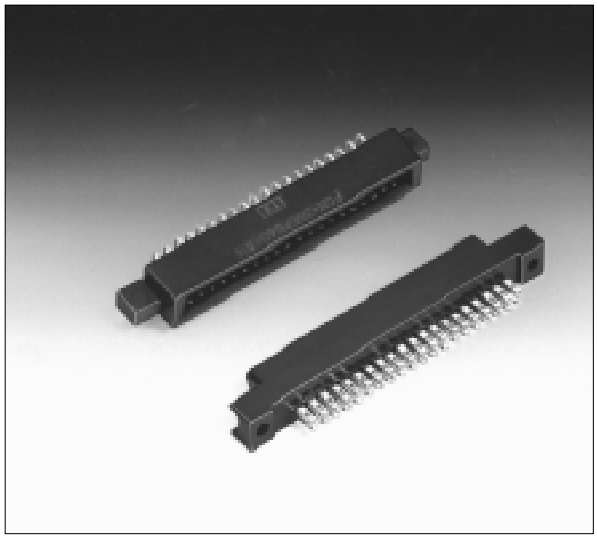

■ SPECIFICATIONS

Item		Specification
Operating temperature range		–55°C to +85°C
Current Rating		DC 3 A (IDC type: 1 A)
Voltage Rating		AC 250 V
Contact resistance		15 mΩ max. (DC 6 V, 0.3 A)
Insulation resistance		1000 MΩ min. (DC 500 V)
Dielectric withstanding voltage		AC 500 V for 1 minute
Insertion force		2.5 kg max. (8 contacts), 20 kg max. (64 contacts)
Withdrawal force		0.3 kg min. (8 contacts), 2.3 kg min. (64 contacts)
Applicable wire	Soldering	ϕ0.60 mm (0.024 in.) max, AWG #23 or less
	Wire-wrapping	ϕ0.32 mm (0.013 in.) to ϕ0.26 mm (0.010 in.), AWG #28 to #30
	Crimping	Standard contacts ϕ0.51 mm (0.020 in.) to ϕ0.32 mm (0.013 in.), AWG #24 to #28, insulator ϕ1.2 mm (0.047 in.) max. Contacts for thick wires ϕ0.64 mm (0.025 in.) to ϕ0.32 mm (0.013 in.), AWG #22 to #28, insulator ϕ1.7 (0.067 in.) max.
	IDC	Flat cable 1.27 mm (0.050 in.) pitch, AWG #28 (stranded wire), AWG #30 (solid wire)
Applicable PC board		1.6 mm (0.063 in.) standard thick

■ MATERIALS

Item	Material
Insulator	Polyester (363J: PC94V-2)
Conductor	Copper alloy
Plating	Gold plating, silver plating

■ PART NUMBER

FCN-36 7 J 048-AU / H

- (Only for IDC) Shape of connector cover with IDC holders
  - B: Close end (special)
  - F: Close end
  - H: Through end
- Plating and cover specification
  - AU: Gold plating
  - B: Type B cover (standard)
  - C: Type C cover (for cable-to-cable connection)
  - D: Type D cover (with metal cable clamp)
  - E: Type E cover (with long lock-screws)
  - F: Type F cover (64 contacts only)
  - G1: One-touch lock type (40 contacts only)
  - H/E: EMI protection type (40 contacts only)
  - J1: Obtuse angle cable-out cover (40 contacts only)
- Number of contacts
  - 8, 16, 24, 32, 40, 48, 56, 64
- Connector or parts type
  - A: Metal fitting
  - C: Cover
  - J: Jack
  - P: Plug
- Tail type
  - 0: Cover, metal fitting
  - 1: Soldering
  - 2: Wire-wrapping
  - 3: Crimping
  - 4: Straight
  - 5: Right-angle
  - 7: IDC
- 360 series connector
- Fujitsu connector

■ APPLICATION EXAMPLE

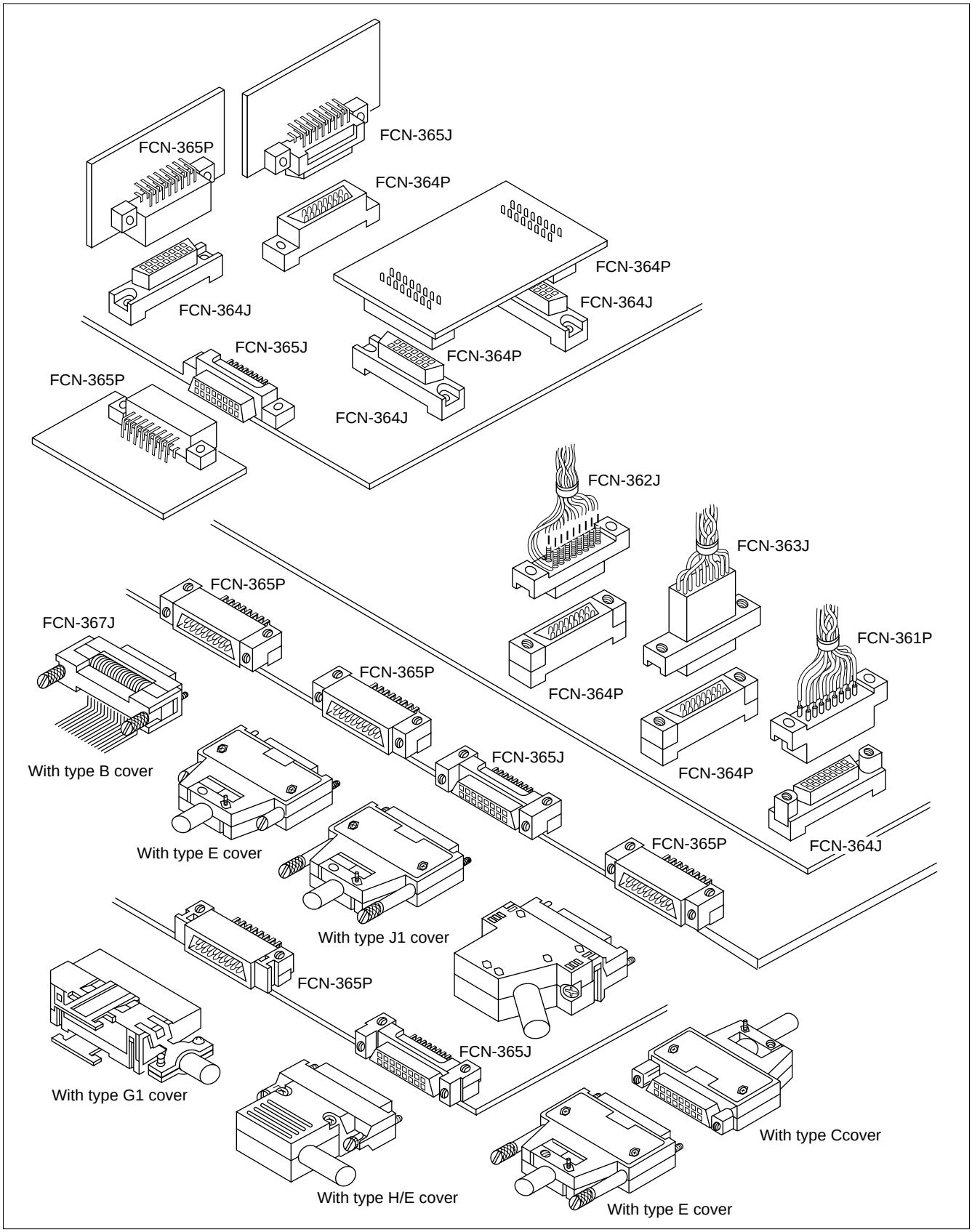

SOLDERING TYPE (PLUG)

■ DIMENSIONS

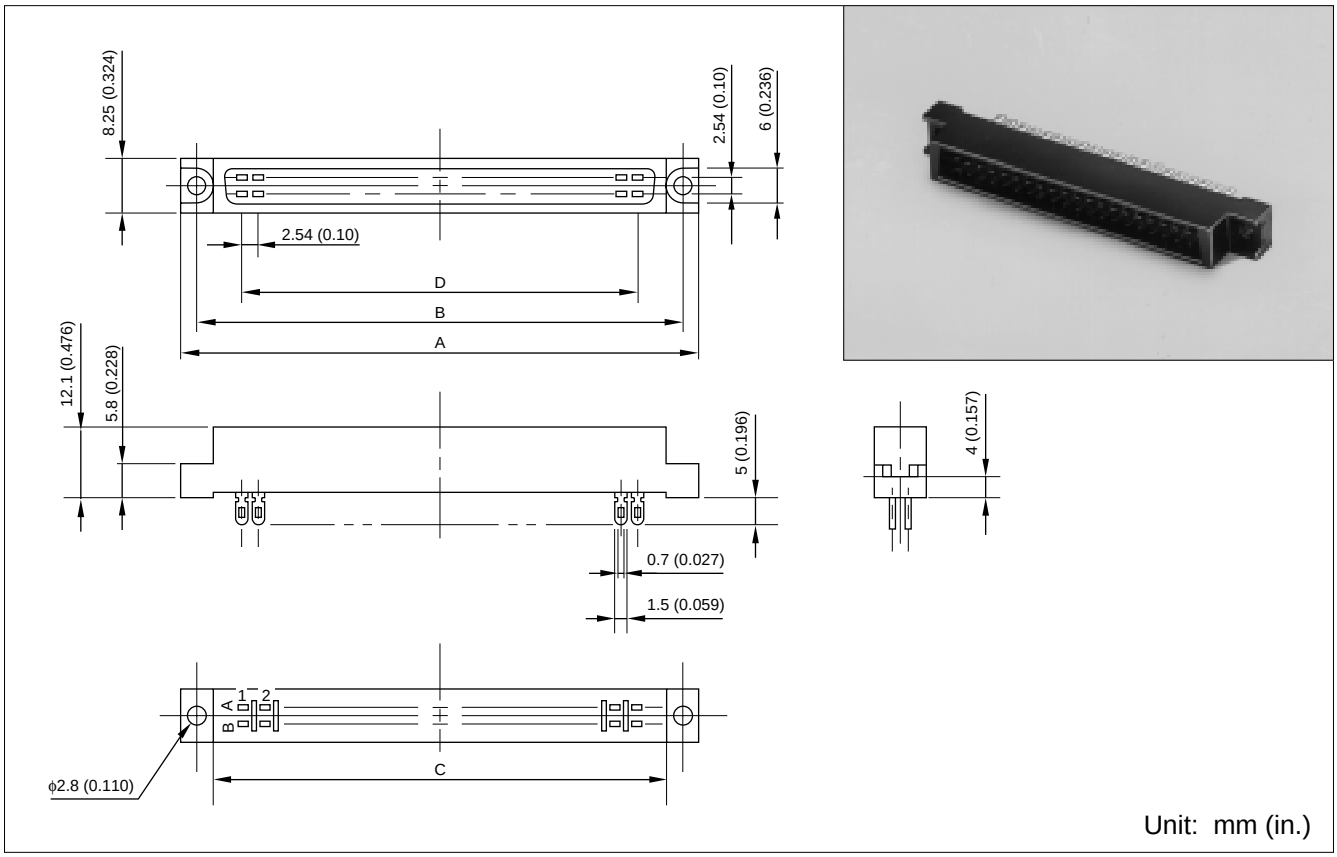

■ MOUTING HOLE LAYOUT

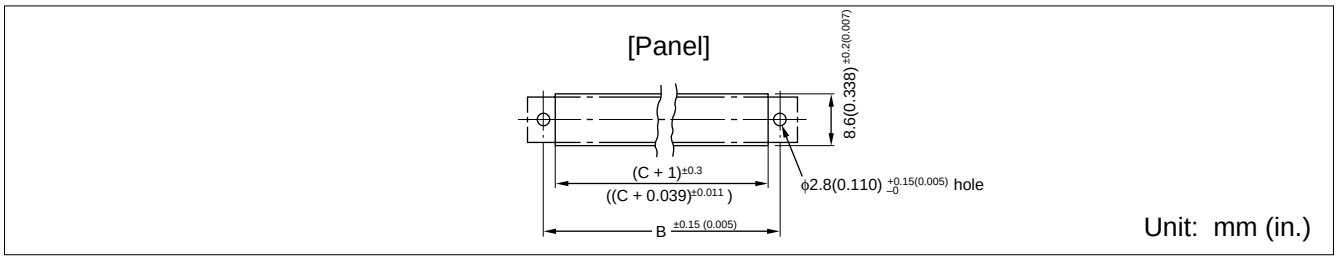

■ PART NUMBERS AND DIMENSIONS

Number of contacts	Part number	Dimensions: mm (in.)			
		A	B	C	D
8	FCN-361P008-AU	28.84 (1.135)	23.34 (0.918)	17.84 (0.702)	7.62 (0.3)
16	FCN-361P016-AU	39.0 (1.535)	33.5 (1.318)	28.0 (1.102)	17.78 (0.7)
24	FCN-361P024-AU	49.16 (1.935)	43.66 (1.718)	38.16 (1.502)	27.94 (1.1)
32	FCN-361P032-AU	59.32 (2.335)	53.82 (2.118)	48.32 (1.902)	38.1 (1.5)
40	FCN-361P040-AU	69.48 (2.735)	63.98 (2.518)	58.48 (2.302)	48.26 (1.9)
48	FCN-361P048-AU	79.64 (3.135)	74.14 (2.918)	68.64 (2.702)	58.42 (2.3)
56	FCN-361P056-AU	89.8 (3.535)	84.3 (3.318)	78.8 (3.102)	68.58 (2.7)
64	FCN-361P064-AU	99.96 (3.935)	94.46 (3.718)	88.96 (3.502)	78.74 (3.1)

SOLDERING TYPE (JACK)

■ DIMENSIONS

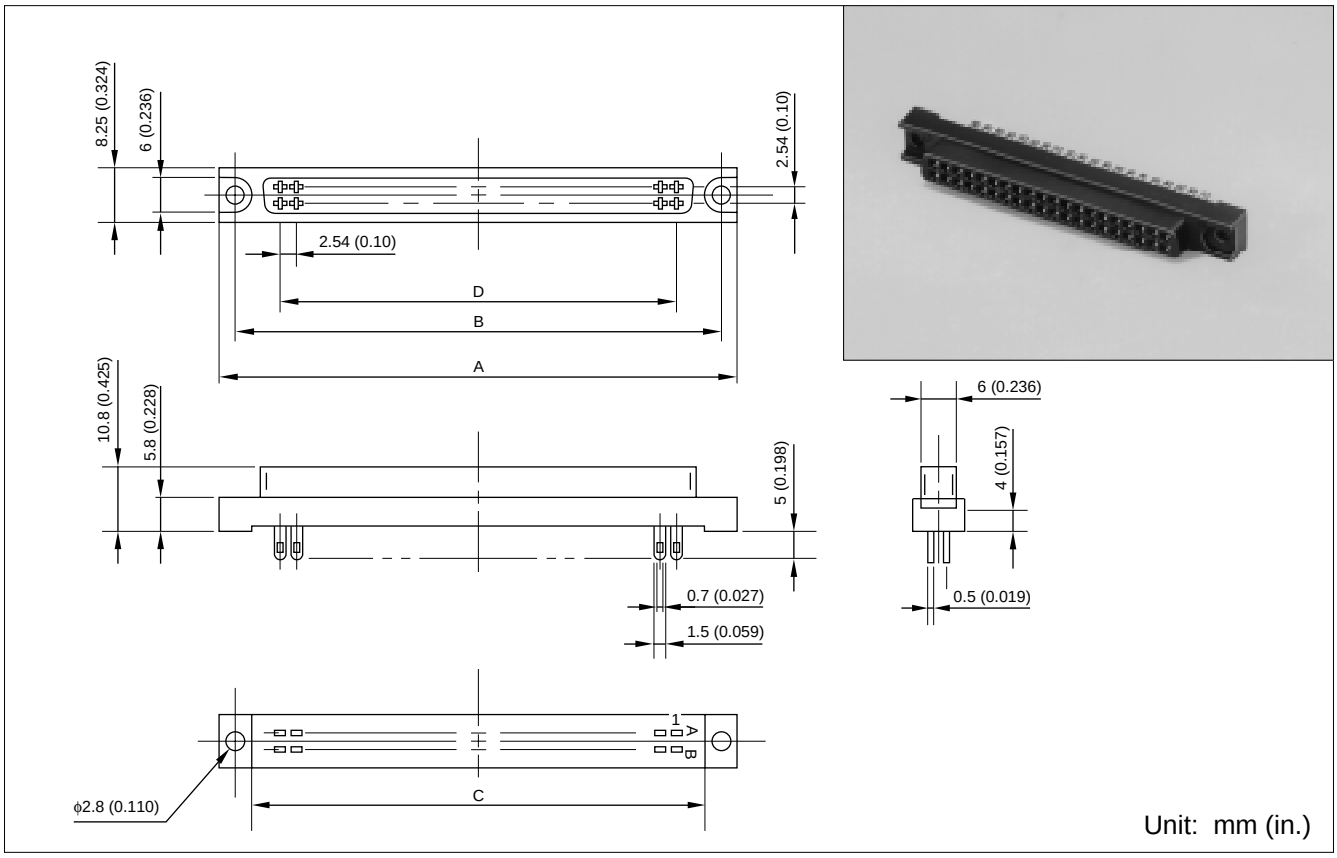

■ BOARD MOUTING HOLE LAYOUT

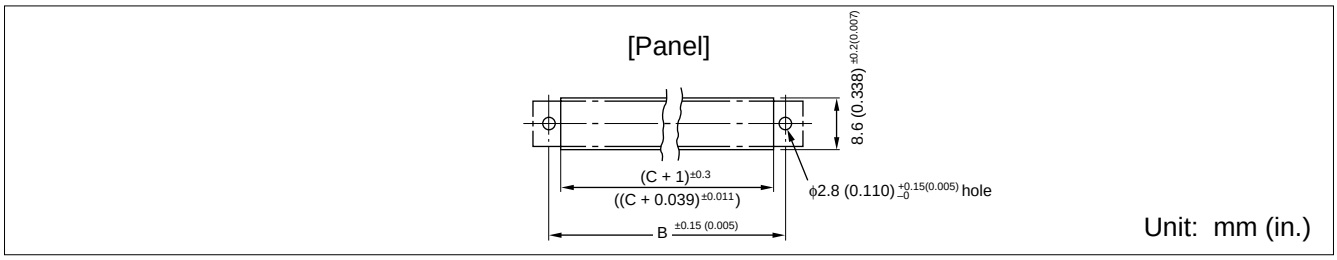

■ PART NUMBERS AND DIMENSIONS

Number of contacts	Part number	Dimensions: mm (in.)			
		A	B	C	D
8	FCN-361J008-AU	28.84 (1.135)	23.34 (0.918)	17.84 (0.702)	7.62 (0.3)
16	FCN-361J016-AU	39.0 (1.535)	33.5 (1.318)	28.0 (1.102)	17.78 (0.7)
24	FCN-361J024-AU	49.16 (1.935)	43.66 (1.718)	38.16 (1.502)	27.94 (1.1)
32	FCN-361J032-AU	59.32 (2.335)	53.82 (2.118)	48.32 (1.902)	38.1 (1.5)
40	FCN-361J040-AU	69.48 (2.735)	63.98 (2.518)	58.48 (2.302)	48.26 (1.9)
48	FCN-361J048-AU	79.64 (3.135)	74.14 (2.918)	68.64 (2.702)	58.42 (2.3)
56	FCN-361J056-AU	89.8 (3.535)	84.3 (3.318)	78.8 (3.102)	68.58 (2.7)
64	FCN-361J064-AU	99.96 (3.935)	94.46 (3.718)	88.96 (3.502)	78.74 (3.1)

WIRE-WRAP TYPE (PLUG)

■ DIMENSIONS

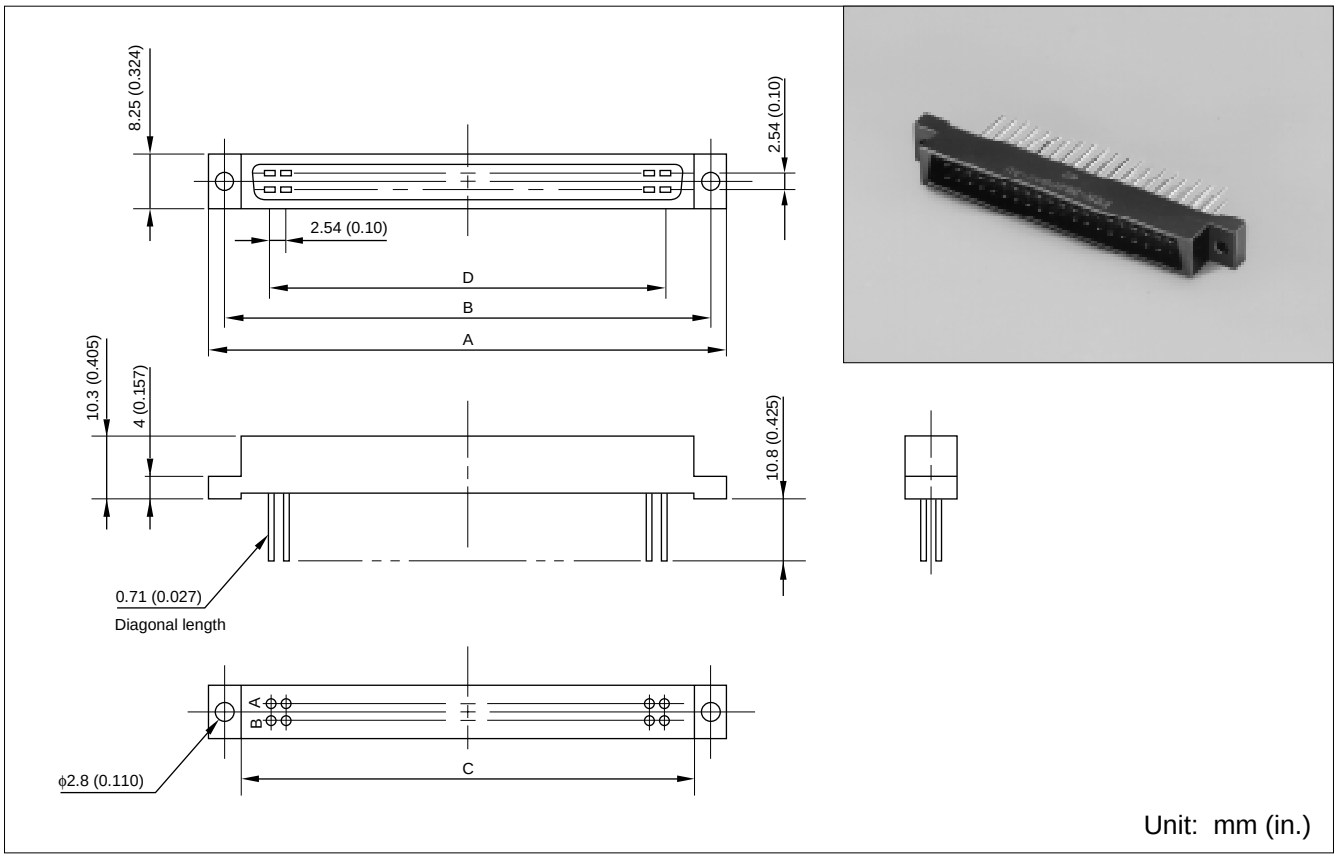

■ MOUTING HOLE LAYOUT

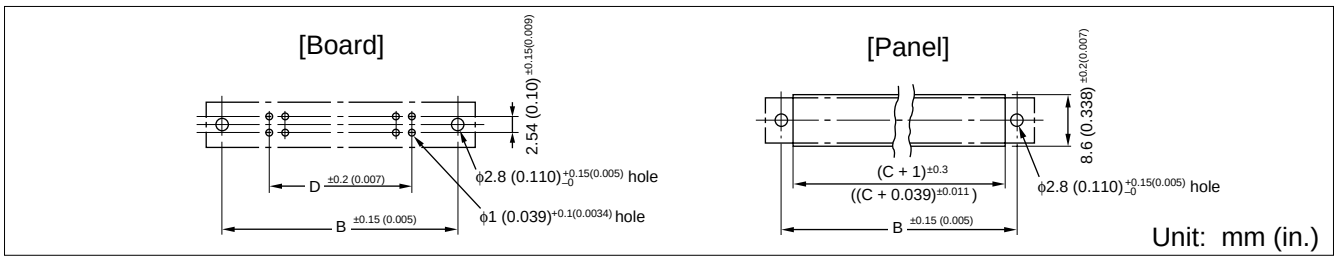

■ PART NUMBERS AND DIMENSIONS

Number of contacts	Part number	Dimensions: mm (in.)			
		A	B	C	D
8	FCN-362P008-AU	28.84 (1.135)	23.34 (0.918)	17.84 (0.702)	7.62 (0.3)
16	FCN-362P016-AU	39.0 (1.535)	33.5 (1.318)	28.0 (1.102)	17.78 (0.7)
24	FCN-362P024-AU	49.16 (1.935)	43.66 (1.718)	38.16 (1.502)	27.94 (1.1)
32	FCN-362P032-AU	59.32 (2.335)	53.82 (2.118)	48.32 (1.902)	38.1 (1.5)
40	FCN-362P040-AU	69.48 (2.735)	63.98 (2.518)	58.48 (2.302)	48.26 (1.9)
48	FCN-362P048-AU	79.64 (3.135)	74.14 (2.918)	68.64 (2.702)	58.42 (2.3)
56	FCN-362P056-AU	89.8 (3.535)	84.3 (3.318)	78.8 (3.102)	68.58 (2.7)
64	FCN-362P064-AU	99.96 (3.935)	94.46 (3.718)	88.96 (3.502)	78.74 (3.1)

WIRE-WRAP TYPE (JACK)

■ DIMENSIONS

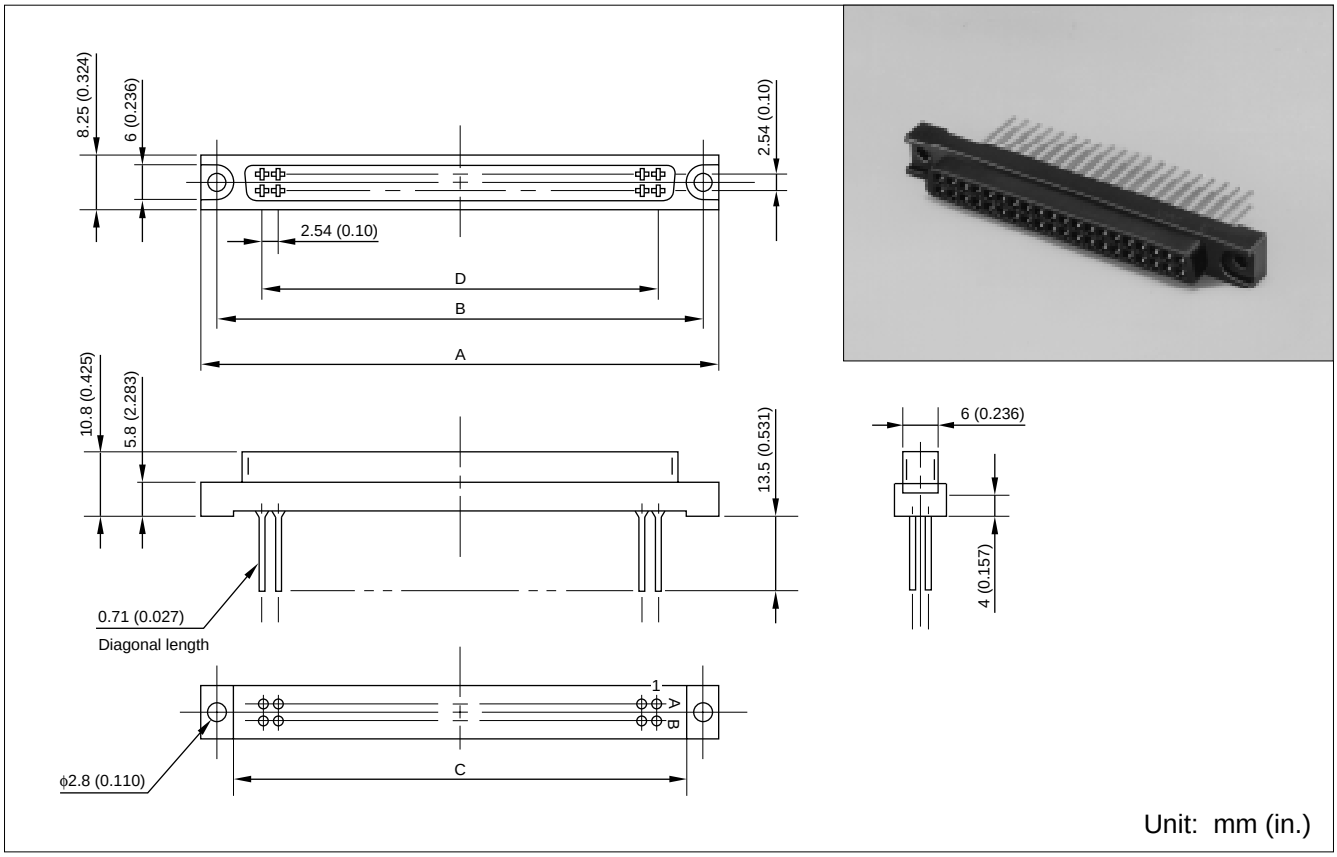

■ MOUTING HOLE LAYOUT

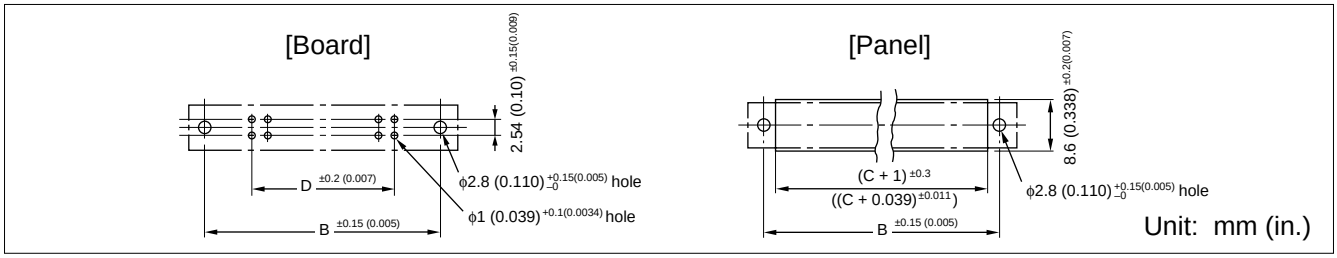

■ PART NUMBERS AND DIMENSIONS

Number of contacts	Part number	Dimensions: mm (in.)			
		A	B	C	D
8	FCN-362J008-AU	28.84 (1.135)	23.34 (0.918)	17.84 (0.702)	7.62 (0.3)
16	FCN-362J016-AU	39.0 (1.535)	33.5 (1.318)	28.0 (1.102)	17.78 (0.7)
24	FCN-362J024-AU	49.16 (1.935)	43.66 (1.718)	38.16 (1.502)	27.94 (1.1)
32	FCN-362J032-AU	59.32 (2.335)	53.82 (2.118)	48.32 (1.902)	38.1 (1.5)
40	FCN-362J040-AU	69.48 (2.735)	63.98 (2.518)	58.48 (2.302)	48.26 (1.9)
48	FCN-362J048-AU	79.64 (3.135)	74.14 (2.918)	68.64 (2.702)	58.42 (2.3)
56	FCN-362J056-AU	89.8 (3.535)	84.3 (3.318)	78.8 (3.102)	68.58 (2.7)
64	FCN-362J064-AU	99.96 (3.935)	94.46 (3.718)	88.96 (3.502)	78.74 (3.1)

CRIMP TYPE (JACK HOUSING)

■ DIMENSIONS

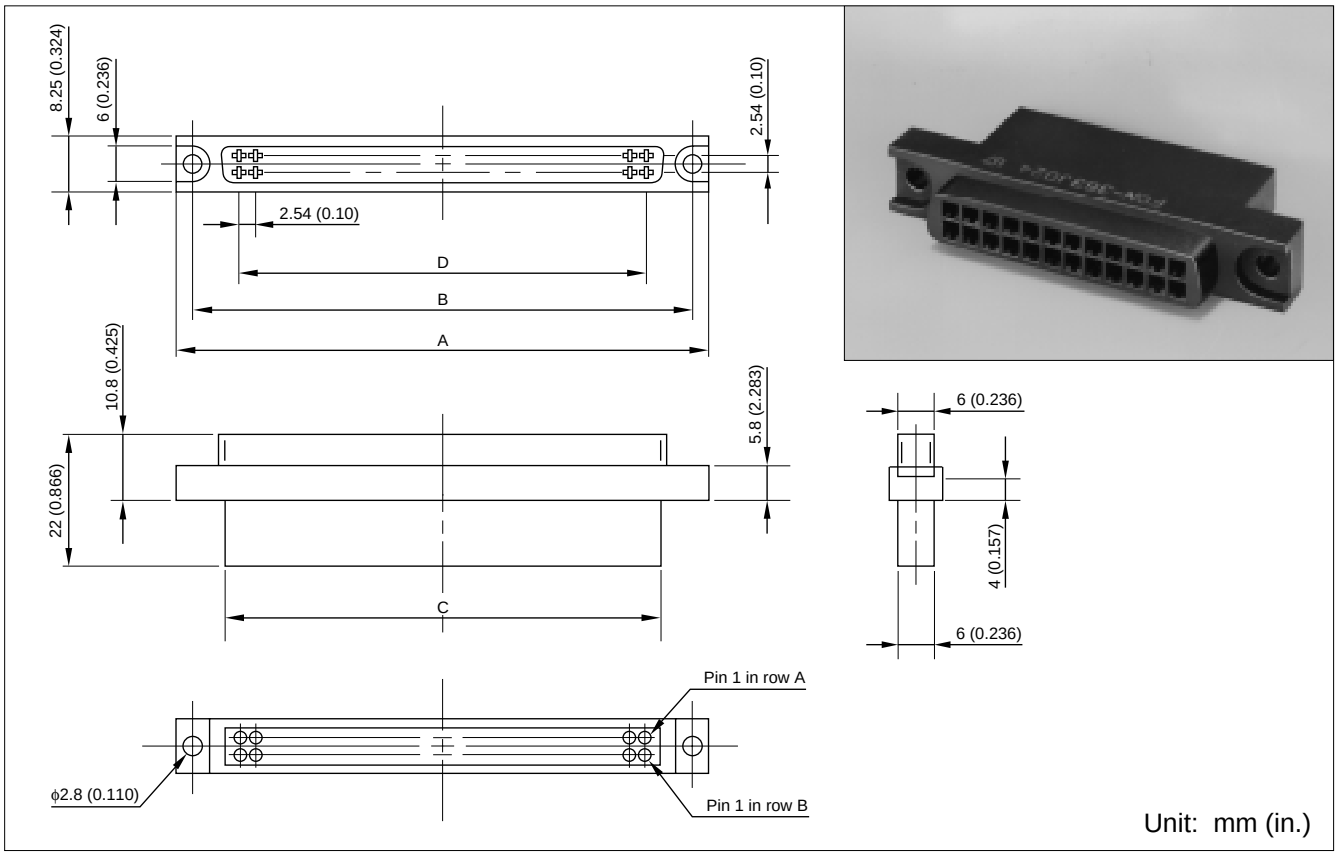

■ MOUTING HOLE LAYOUT

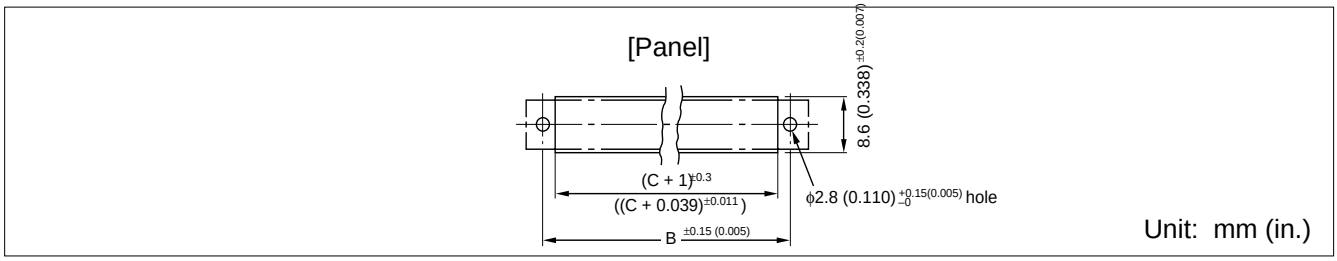

■ PART NUMBERS AND DIMENSIONS

Number of contacts	Part number	Dimensions: mm (in.)			
		A	B	C	D
8	FCN-363J008	28.84 (1.135)	23.34 (0.918)	17.84 (0.702)	7.62 (0.3)
16	FCN-363J016	39.0 (1.535)	33.5 (1.318)	28.0 (1.102)	17.78 (0.7)
24	FCN-363J024	49.16 (1.935)	43.66 (1.718)	38.16 (1.502)	27.94 (1.1)
32	FCN-363J032	59.32 (2.335)	53.82 (2.118)	48.32 (1.902)	38.1 (1.5)
40	FCN-363J040	69.48 (2.735)	63.98 (2.518)	58.48 (2.302)	48.26 (1.9)
48	FCN-363J048	79.64 (3.135)	74.14 (2.918)	68.64 (2.702)	58.42 (2.3)
56	FCN-363J056	89.8 (3.535)	84.3 (3.318)	78.8 (3.102)	68.58 (2.7)
64	FCN-363J064	99.96 (3.935)	94.46 (3.718)	88.96 (3.502)	78.74 (3.1)

CRIMP TYPE (CONTACT)
■ DIMENSIONS

Standard contact (applicable wire: AWG #24 to #28)

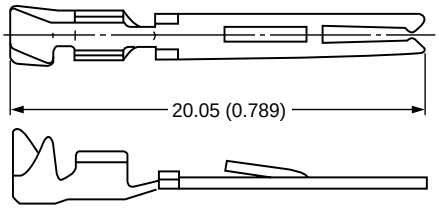

Thick wire connection contact (applicable wire: AWG #22 to #26)

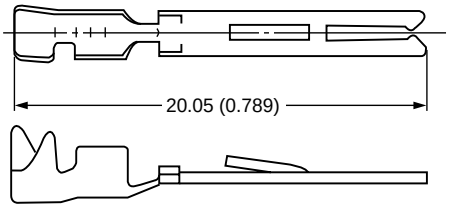

Unit: mm (in.)

■ PART NUMBERS

Type	Plating	Standard	Thick wire connection contact
Loose piece	Gold plating	FCN-363J-AU	FCN-363J-AU/S
Strip reeled	Gold plating	FCN-363J-AU/R	FCN-363J-AU/T

■ PART NUMBERS OF CRIMPING TOOLS

Part number	Contact type	Applicable wire	Wire cross-section area (mm^2)	Crimp height	Insulator diameter	Stripped length
FCN-363T-T005/H (Hand crimping tool)	FCN-363J-AU (Loose piece)	AWG #24	0.20 to 0.24	1.25 mm (0.049 in.) to 1.30 mm (0.051 in.)	ϕ1.2 mm (0.047 in.) max	3.0 mm (0.118 in.) to 4.0 mm (0.157 in.)
	FCN-363J-AU/R (Strip reeled)	AWG #26	0.13 to 0.16	1.20 mm (0.047 in.) to 1.25 mm (0.049 in.)	ϕ1.2 mm (0.047 in.) max	3.0 mm (0.118 in.) to 4.0 mm (0.157 in.)
		AWG #28	0.088 to 0.096	1.15 mm (0.045 in.) to 1.20 mm (0.047 in.)	ϕ1.2 mm (0.047 in.) max	3.0 mm (0.118 in.) to 4.0 mm (0.157 in.)
FCN-363T-T011/H (Hand crimping tool)	FCN-363J-AU/S (Loose piece)	AWG #22	0.30 to 0.40	0.85 mm (0.033 in.) to 0.95 mm (0.037 in.)	ϕ0.9 mm (0.035 in.) 1.8 mm (0.071 in.)	3.0 mm (0.118 in.) to 4.0 mm (0.157 in.)
	FCN-363J-AU/T (Strip reeled)	AWG #24	0.20 to 0.24	0.75 mm (0.029 in.) to 0.85 mm (0.033 in.)	ϕ0.9 mm (0.035 in.) 1.8 mm (0.071 in.)	3.0 mm (0.118 in.) to 4.0 mm (0.157 in.)
		AWG #26	0.13 to 0.16	0.73 mm (0.028 in.) to 0.81 mm (0.031 in.)	ϕ0.9 mm (0.035 in.) 1.8 mm (0.071 in.)	3.0 mm (0.118 in.) to 4.0 mm (0.157 in.)

[Hand crimping tool]

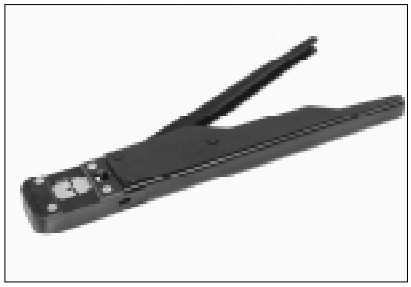

[Contact withdrawal tool]

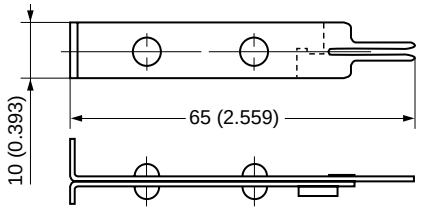

FCN-360T-T001/H

STRAIGHT TYPE (PLUG)

■ DIMENSIONS

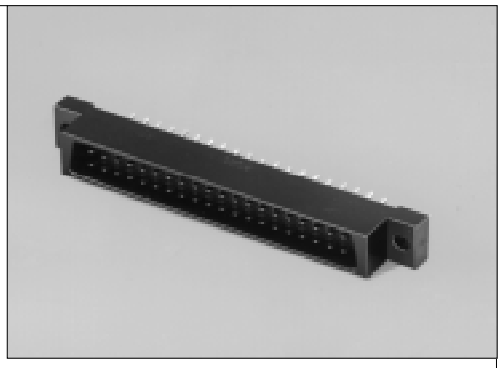

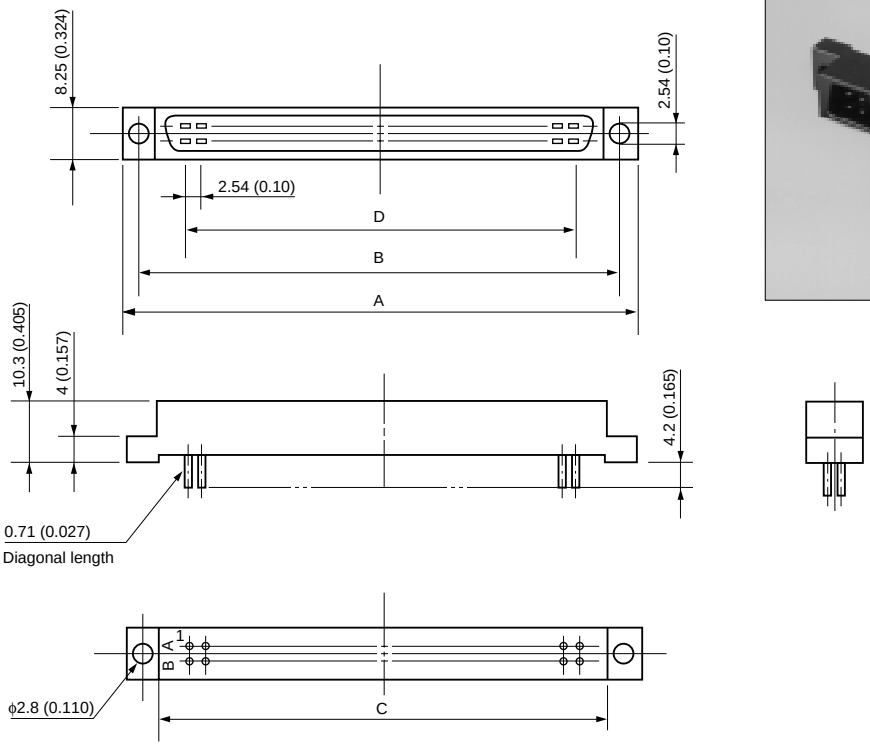

Unit: mm (in.)

■ BOARD MOUTING HOLE LAYOUT

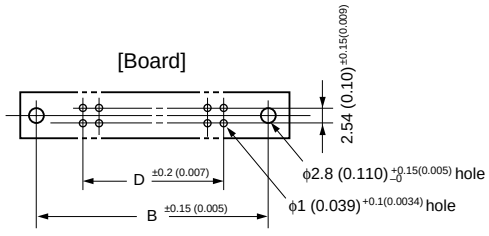

Unit: mm (in.)

■ PART NUMBERS AND DIMENSIONS

Number of contacts	Part number	Dimensions: mm (in.)			
		A	B	C	D
8	FCN-364P008-AU	28.84 (1.135)	23.34 (0.918)	17.84 (0.702)	7.62 (0.3)
16	FCN-364P016-AU	39.0 (1.535)	33.5 (1.318)	28.0 (1.102)	17.78 (0.7)
24	FCN-364P024-AU	49.16 (1.935)	43.66 (1.718)	38.16 (1.502)	27.94 (1.1)
32	FCN-364P032-AU	59.32 (2.335)	53.82 (2.118)	48.32 (1.902)	38.1 (1.5)
40	FCN-364P040-AU	69.48 (2.735)	63.98 (2.518)	58.48 (2.302)	48.26 (1.9)
48	FCN-364P048-AU	79.64 (3.135)	74.14 (2.918)	68.64 (2.702)	58.42 (2.3)
56	FCN-364P056-AU	89.8 (3.535)	84.3 (3.318)	78.8 (3.102)	68.58 (2.7)
64	FCN-364P064-AU	99.96 (3.935)	94.46 (3.718)	88.96 (3.502)	78.74 (3.1)

STRAIGHT TYPE (JACK)

■ DIMENSIONS

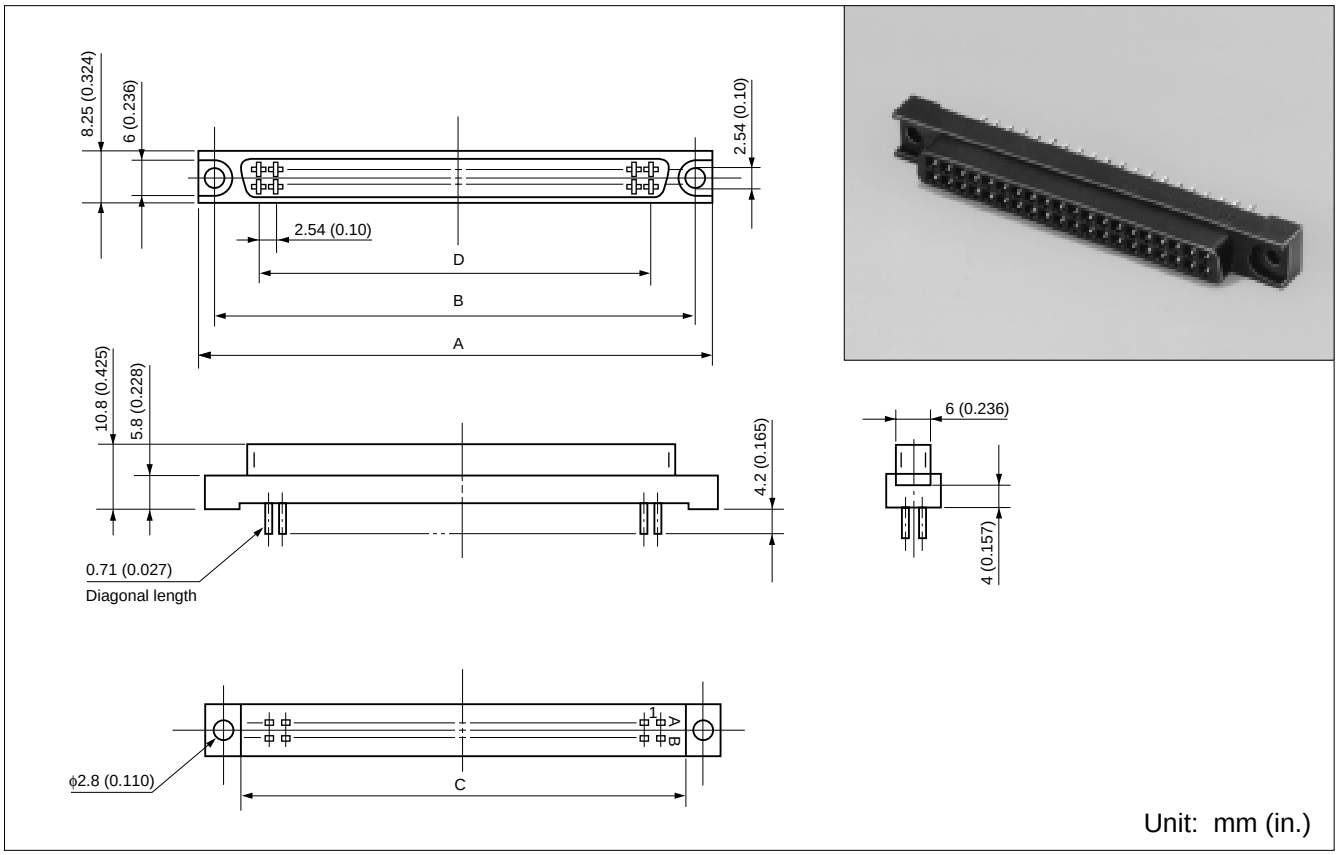

■ BOARD MOUTING HOLE LAYOUT

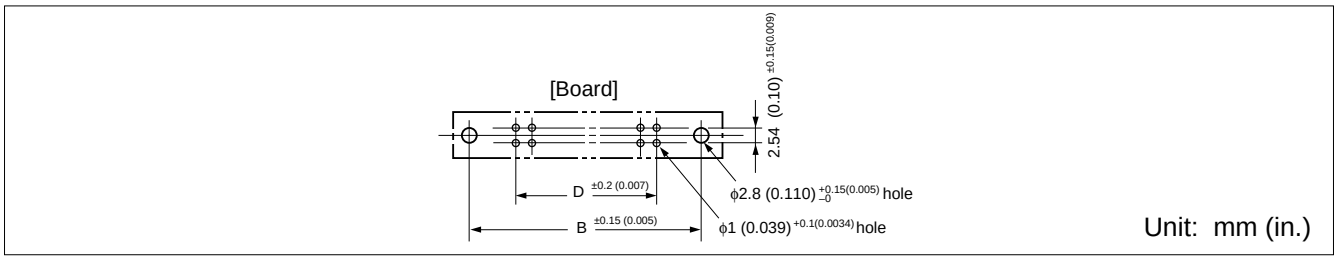

■ PART NUMBERS AND DIMENSIONS

Number of contacts	Part number	Dimensions: mm (in.)			
		A	B	C	D
8	FCN-364J008-AU	28.84 (1.135)	23.34 (0.918)	17.84 (0.702)	7.62 (0.3)
16	FCN-364J016-AU	39.0 (1.535)	33.5 (1.318)	28.0 (1.102)	17.78 (0.7)
24	FCN-364J024-AU	49.16 (1.935)	43.66 (1.718)	38.16 (1.502)	27.94 (1.1)
32	FCN-364J032-AU	59.32 (2.335)	53.82 (2.118)	48.32 (1.902)	38.1 (1.5)
40	FCN-364J040-AU	69.48 (2.735)	63.98 (2.518)	58.48 (2.302)	48.26 (1.9)
48	FCN-364J048-AU	79.64 (3.135)	74.14 (2.918)	68.64 (2.702)	58.42 (2.3)
56	FCN-364J056-AU	89.8 (3.535)	84.3 (3.318)	78.8 (3.102)	68.58 (2.7)
64	FCN-364J064-AU	99.96 (3.935)	94.46 (3.718)	88.96 (3.502)	78.74 (3.1)

RIGHT-ANGLE TYPE (PLUG)

■ DIMENSIONS

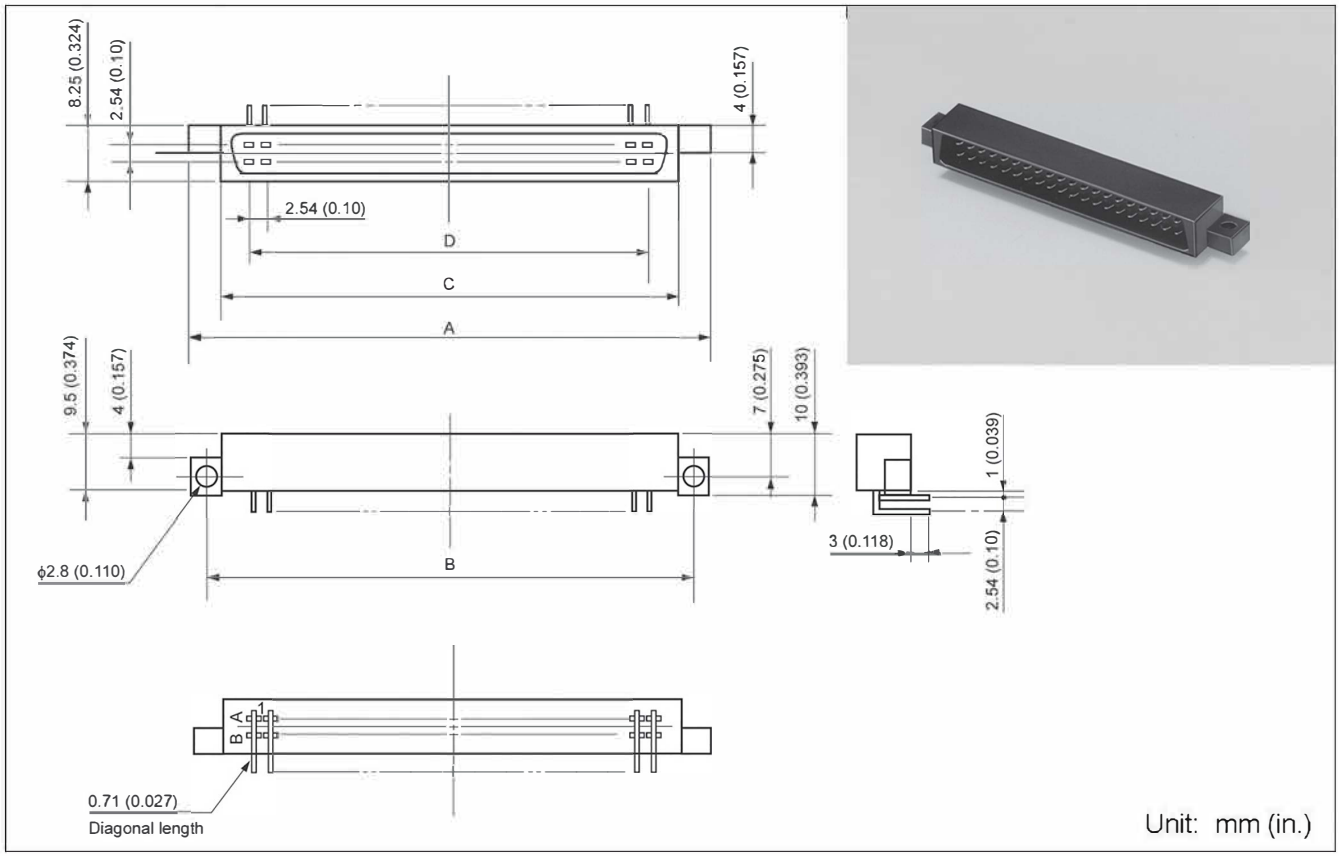

■ MOUTING HOLE LAYOUT

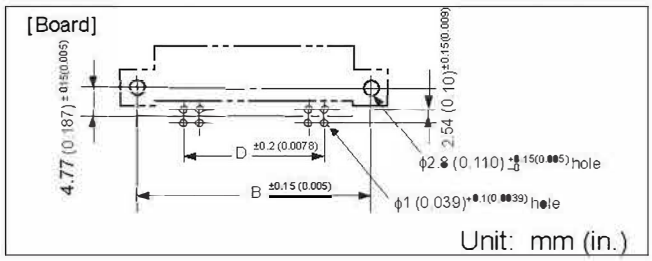

■ NOTE

- **Note on mounting a right-angle plug on a board**

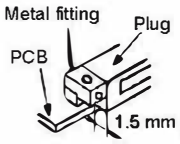

Mount the connector so that it projects from the board by at least 1.5 mm (0.059 in.).

■ PART NUMBERS AND DIMENSIONS

Number of contacts	Part number	Dimensions: mm (in.)			
		A	B	C	D
8	FCN-365P008-AU	28.84 (1.135)	23.34 (0.918)	17.84 (0.702)	7.62 (0.3)
16	FCN-365P016-AU	39.0 (1.535)	33.5 (1.318)	28.0 (1.102)	17.78 (0.7)
24	FCN-365P024-AU	49.16 (1.935)	43.66 (1.718)	38.16 (1.502)	27.94 (1.1)
32	FCN-365P032-AU	59.32 (2.335)	53.82 (2.118)	48.32 (1.902)	38.1 (1.5)
40	FCN-365P040-AU	69.48 (2.735)	63.98 (2.518)	58.48 (2.302)	48.26 (1.9)
48	FCN-365P048-AU	79.64 (3.135)	74.14 (2.918)	68.64 (2.702)	58.42 (2.3)
56	FCN-365P056-AU	89.8 (3.535)	84.3 (3.318)	78.8 (3.102)	68.58 (2.7)
64	FCN-365P064-AU	99.96 (3.935)	94.46 (3.718)	88.96 (3.502)	78.74 (3.1)

RIGHT-ANGLE TYPE (FOR DUAL STACKED MOUNTING [40 CONTACTS ONLY])

■ DIMENSIONS

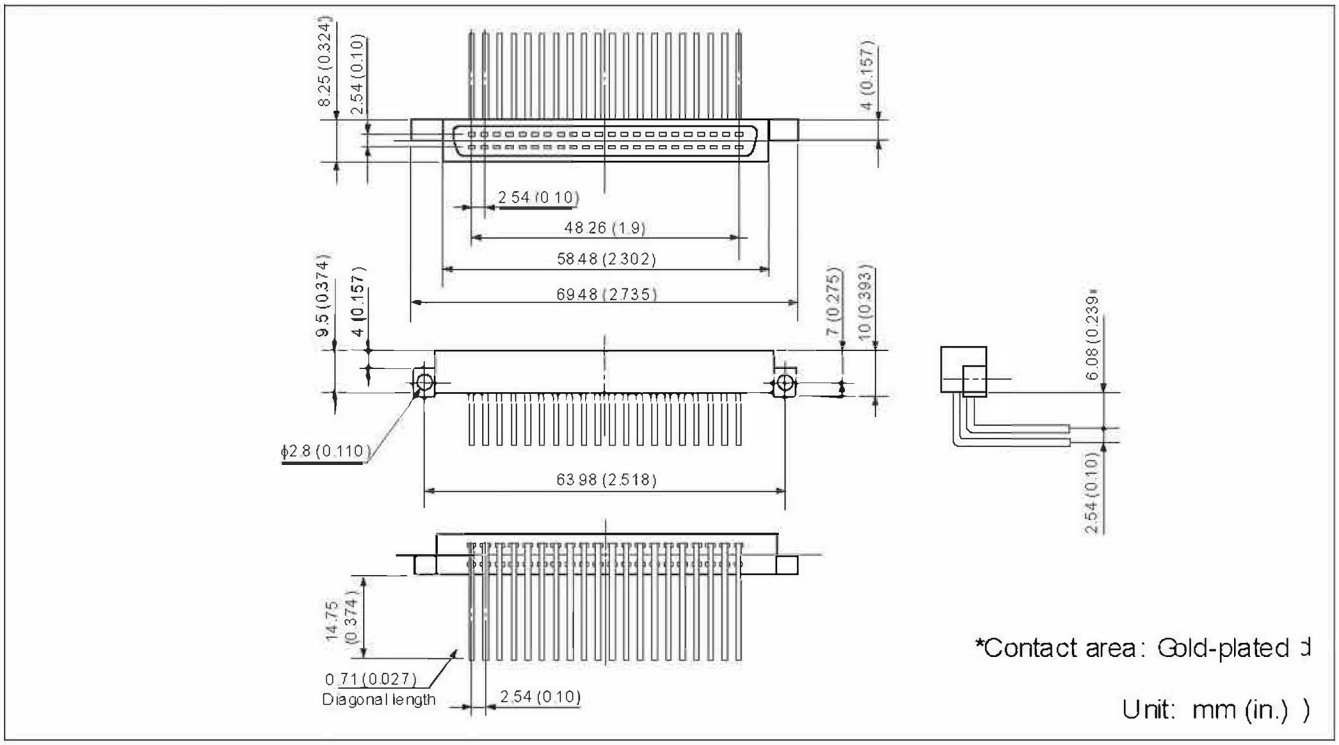

■ MOUTING HOLE LAYOUT

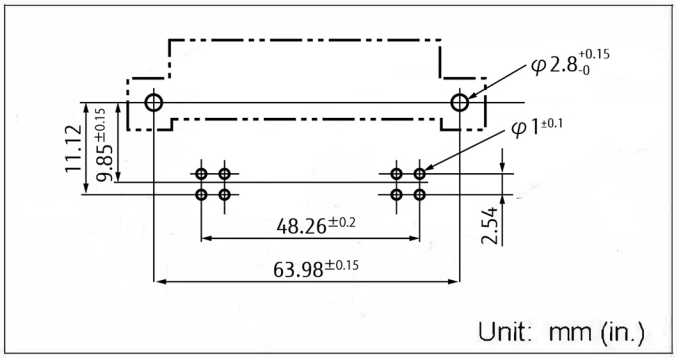

■ METAL FITTINGS FOR DUAL ROW MOUNTING

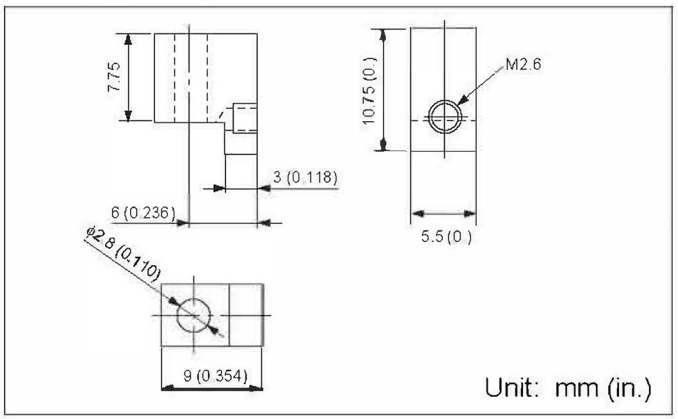

■ PART NUMBER

Right-angle type: N630-3651-T919
Metal fittings: N630-3608-X038

■ MOUTING

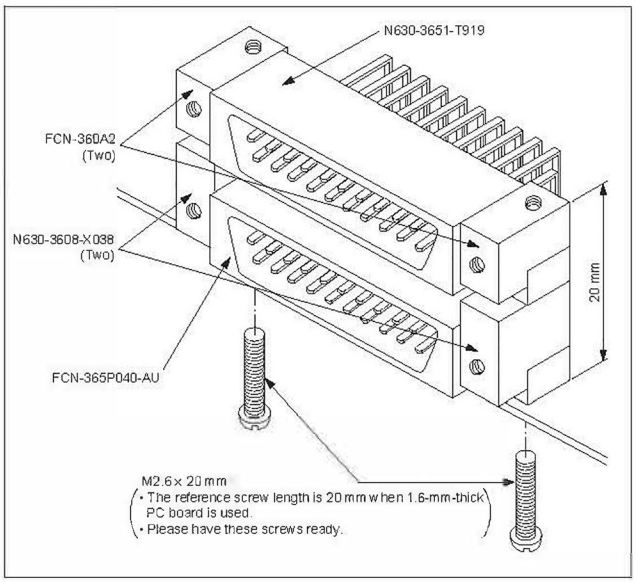

RIGHT-ANGLE TYPE (JACK)

■ DIMENSIONS

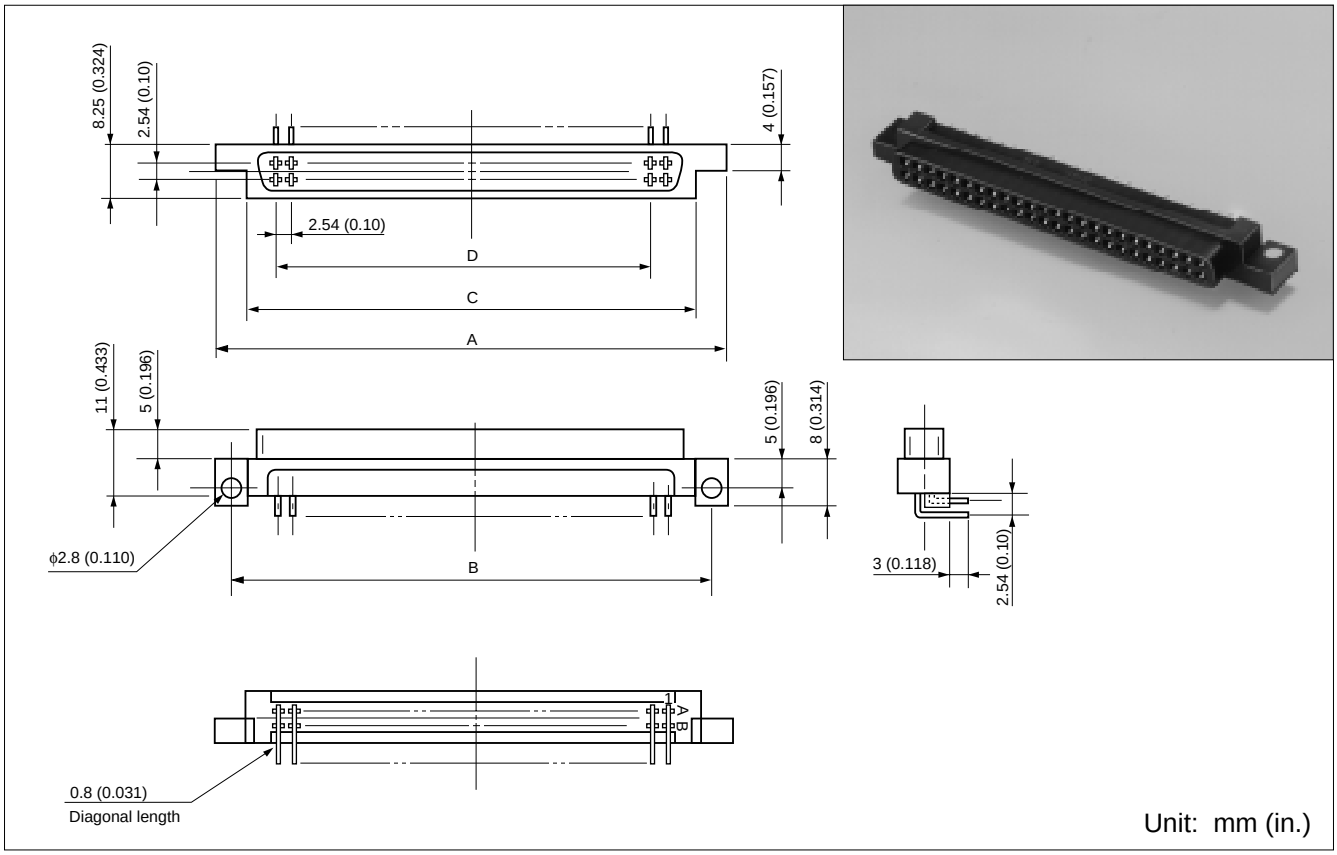

Unit: mm (in.)

■ MOUTING HOLE LAYOUT

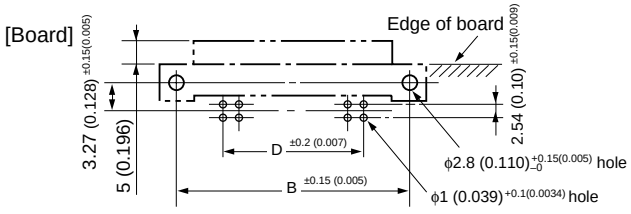

- **Note on mounting a right-angle jack on a board**

  Mount the connector so that it projects from the board by at least 5 mm (0.197 in.).

Unit: mm (in.)

■ PART NUMBERS AND DIMENSIONS

Number of contacts	Part number	Dimensions: mm (in.)			
		A	B	C	D
8	FCN-365J008-AU	28.84 (1.135)	23.34 (0.918)	17.84 (0.702)	7.62 (0.3)
16	FCN-365J016-AU	39.0 (1.535)	33.5 (1.318)	28.0 (1.102)	17.78 (0.7)
24	FCN-365J024-AU	49.16 (1.935)	43.66 (1.718)	38.16 (1.502)	27.94 (1.1)
32	FCN-365J032-AU	59.32 (2.335)	53.82 (2.118)	48.32 (1.902)	38.1 (1.5)
40	FCN-365J040-AU	69.48 (2.735)	63.98 (2.518)	58.48 (2.302)	48.26 (1.9)
48	FCN-365J048-AU	79.64 (3.135)	74.14 (2.918)	68.64 (2.702)	58.42 (2.3)
56	FCN-365J056-AU	89.8 (3.535)	84.3 (3.318)	78.8 (3.102)	68.58 (2.7)
64	FCN-365J064-AU	99.96 (3.935)	94.46 (3.718)	88.96 (3.502)	78.74 (3.1)

IDC TYPE (JACK)
■ DIMENSIONS

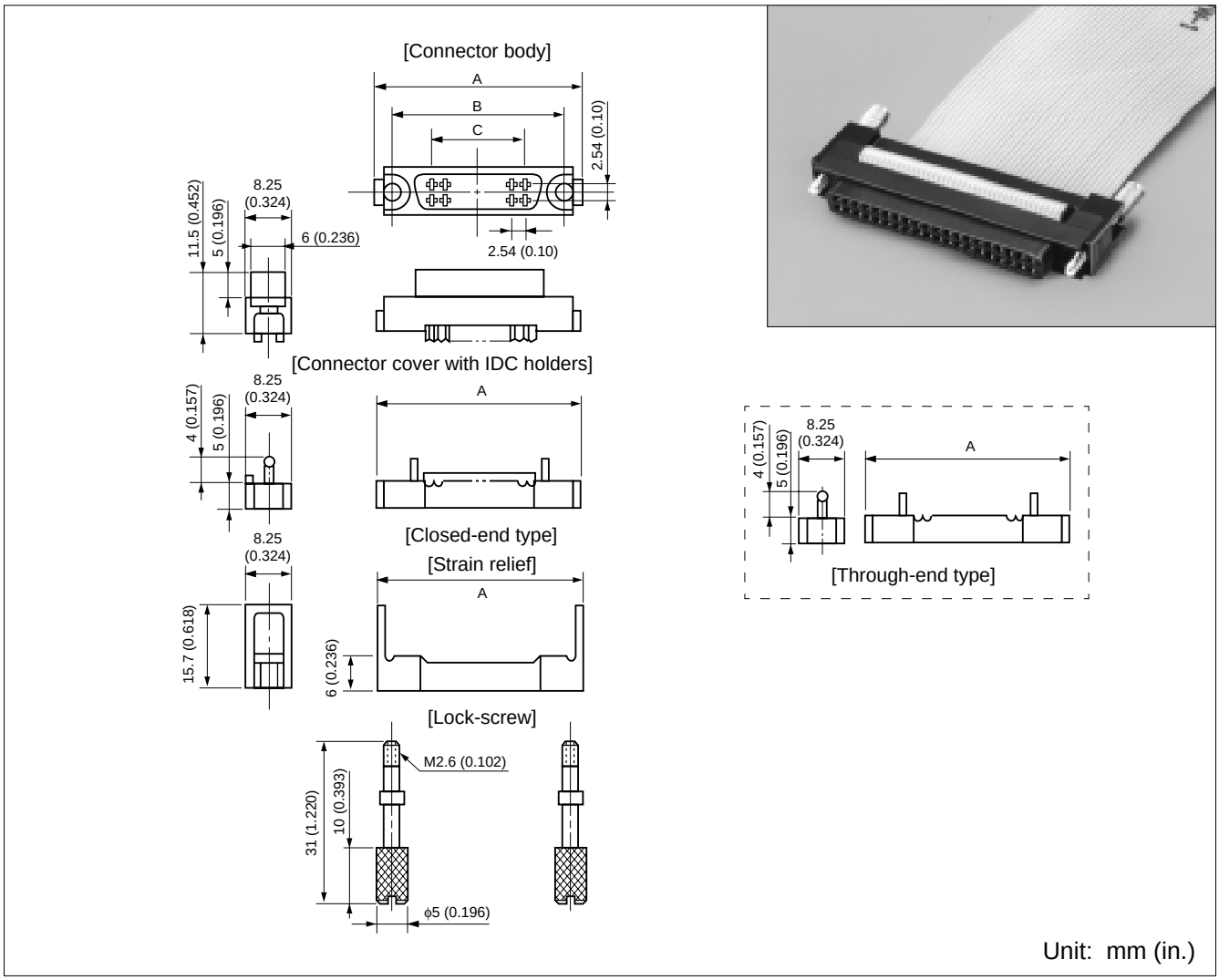

■ PART NUMBERS AND DIMENSIONS

Number of contacts	Part number		Dimensions: mm (in.)		
	Through-end cover	Close-end cover	A	B	D
8	FCN-367J008-AU/H	FCN-367J008-AU/F	28.84 (1.135)	23.34 (0.918)	7.62 (0.3)
16	FCN-367J016-AU/H	FCN-367J016-AU/F	39.0 (1.535)	33.5 (1.318)	17.78 (0.7)
24	FCN-367J024-AU/H	FCN-367J024-AU/F	49.16 (1.935)	43.66 (1.718)	27.94 (1.1)
32	FCN-367J032-AU/H	FCN-367J032-AU/F	59.32 (2.335)	53.82 (2.118)	38.1 (1.5)
40	FCN-367J040-AU/H	FCN-367J040-AU/FW*	69.48 (2.735)	63.98 (2.518)	48.26 (1.9)
48	FCN-367J048-AU/H	FCN-367J048-AU/F	79.64 (3.135)	74.14 (2.918)	58.42 (2.3)
56	FCN-367J056-AU/H	FCN-367J056-AU/F	89.8 (3.535)	84.3 (3.318)	68.58 (2.7)
64	FCN-367J064-AU/H	FCN-367J064-AU/F	99.96 (3.935)	94.46 (3.718)	78.74 (3.1)

*: FC 6 J0 0 A /F is replaced y part num er FC 6 J0 0 A /FW, which indicates change of manufacturing location for this device.

IDC TOOLS

Special IDC tools are used to assemble FCN-360 series connectors and flat cables.

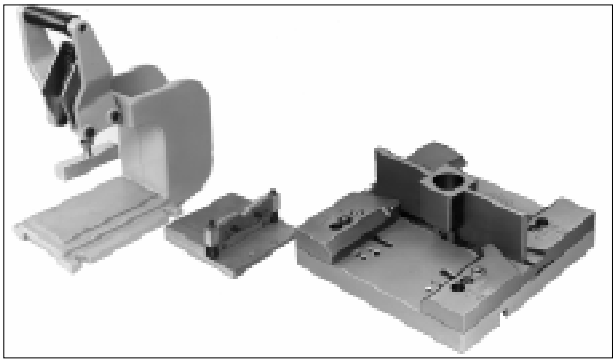

Hand press Cable cutter Locator plate (That for the 790 series is shown in the photograph.)

■ FEATURES

- The mechanisms are simple, so even novices can use them easily.
- Those who already have Fujitsu-manufactured IDC tools for other series connectors need only purchase the locator plate.

  The hand press and cable cutter are designed to be used in common with all connectors.
- The assembly of cables and connectors with various numbers of contacts can be done by selective setting of the connector guides to the specified positions.
- The cable cutter has an extremely sharp cutting edge.

Notes: • A detailed operation manual and instruction manual for IDC tools are available upon request.
• Should any question arise in using the IDC tools, consult our branch offices or agents in your area.

■ ORDERING CODES FOR IDC TOOLS

Tool name	Part number
Cable cutter (common)	FCN-707T-T001/H
Hand press (common)	FCN-707T-T101/H
Locator plate (for 360 series connectors)	FCN-367T-T012/H

The hand press and cable cutter can be used for other IDC connectors.

COVER

■ COMBINATIONS BETWEEN COVERS AND CONNECTORS

Connector / Cover	Plug	Jack			Number of contacts							
	Soldering	Soldering	Wire-wrapping	Crimping	8	16	24	32	40	48	56	64
FCN-360C□□□-B	○	○	○	○	○	○	○	○	○	○	○	○
FCN-360C□□□-C	○	○	○	○	○	○	○	○	○	○	○	○
FCN-360C□□□-D	○	○	○	○					○	○	○	○
FCN-360C□□□-E	○	○	○	○	○	○	○	○	○	○	○	○
FCN-360C064-F	○	○	○	○								○
FCN-360C040-G1	○	○	○	○					○			
FCN-360C040-H/E	○	○							○			
FCN-360C040-J1	○	○							○			

These covers cannot be used for IDC connectors.

COVER (TYPE B)
■ DIMENSIONS

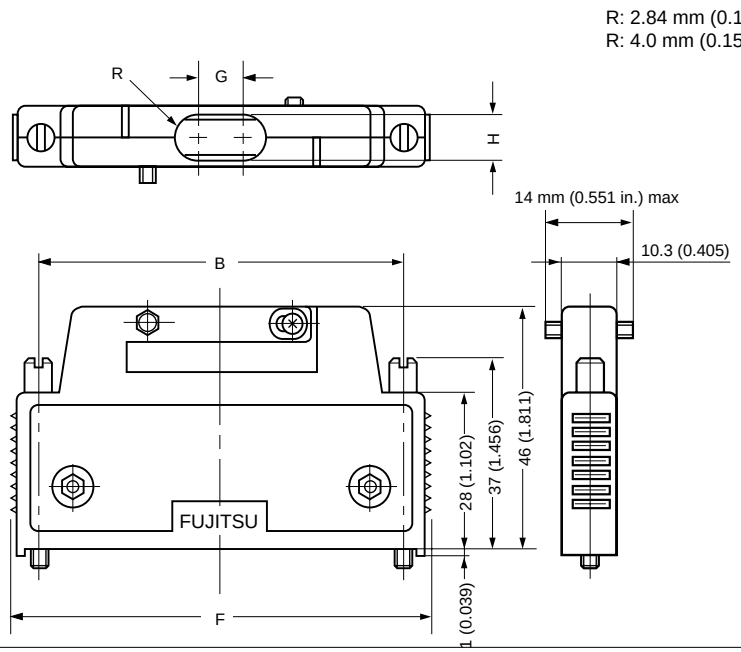

Unit: mm (in.)

■ EXPLODED VIEW

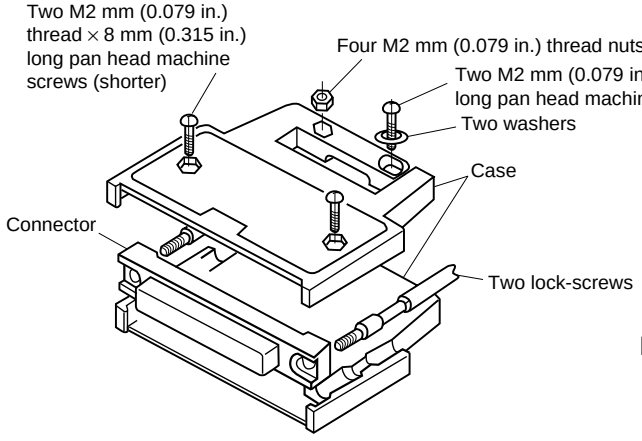

Note: The screws, nuts, washers, and lock-screws are attached to the cover.

■ PART NUMBERS AND DIMENSIONS

Number of contacts	Part number	Dimensions: mm (in.)			
		B	F	G	H
8	FCN-360C008-B	23.34 (0.918)	32.08 (1.262)	—	ϕ 5.7 (0.224)
16	FCN-360C016-B	33.50 (1.318)	42.24 (1.662)	—	ϕ 5.7 (0.224)
24	FCN-360C024-B	43.66 (1.718)	52.40 (2.062)	—	ϕ 8.0 (0.314)
32	FCN-360C032-B	53.82 (2.118)	62.56 (2.462)	2.0 (0.078)	8.0 (0.314)
40	FCN-360C040-B	63.98 (2.518)	72.72 (2.862)	6.0 (0.236)	8.0 (0.314)
48	FCN-360C048-B	74.14 (2.918)	82.88 (3.262)	10.0 (0.393)	8.0 (0.314)
56	FCN-360C056-B	84.30 (3.318)	93.04 (3.662)	14.0 (0.551)	8.0 (0.314)
64	FCN-360C064-B	94.46 (3.718)	103.20 (4.062)	18.0 (0.708)	8.0 (0.314)

COVER FOR CABLE TO CABLE CONNECTION (TYPE C)

■ DIMENSIONS

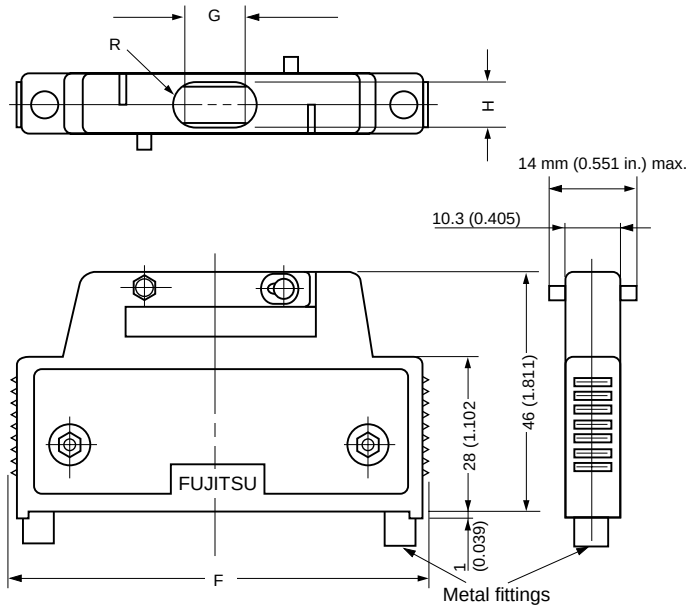

R: 2.84 mm (0.112 in.) (8 and 16 contacts)
R: 4.0 mm (0.157 in.) (24 and 64 contacts)

Note: This cover can be combined with a cover of type B, D, or E for cable-to-cable connection.

Unit: mm (in.)

■ EXPLODED VIEW

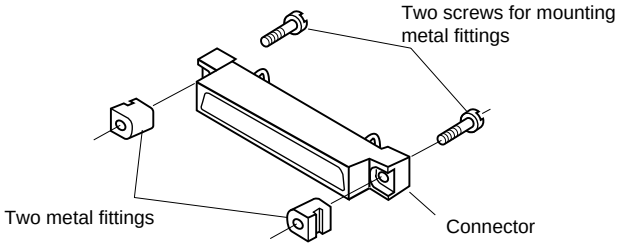

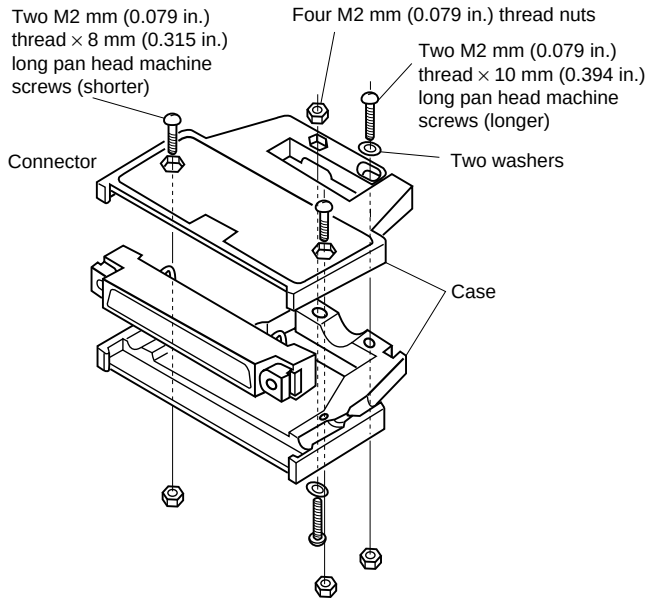

Note: The screws, nuts, washers, and accessory are attached to the cover.

■ PART NUMBERS AND DIMENSIONS

Number of contacts	Part number	Dimensions: mm (in.)		
		F	G	H
8	FCN-360C008-C	32.08 (1.262)	—	ϕ 5.7 (0.224)
16	FCN-360C016-C	42.24 (1.662)	—	ϕ 5.7 (0.224)
24	FCN-360C024-C	52.40 (2.062)	—	ϕ 8.0 (0.314)
32	FCN-360C032-C	62.56 (2.462)	2.0 (0.078)	8.0 (0.314)
40	FCN-360C040-C	72.72 (2.862)	6.0 (0.236)	8.0 (0.314)
48	FCN-360C048-C	82.88 (3.262)	10.0 (0.393)	8.0 (0.314)
56	FCN-360C056-C	93.04 (3.662)	14.0 (0.551)	8.0 (0.314)
64	FCN-360C064-C	103.20 (4.062)	18.0 (0.708)	8.0 (0.314)

COVER (WIDE OPENING TYPE) (TYPE D)

■ DIMENSIONS

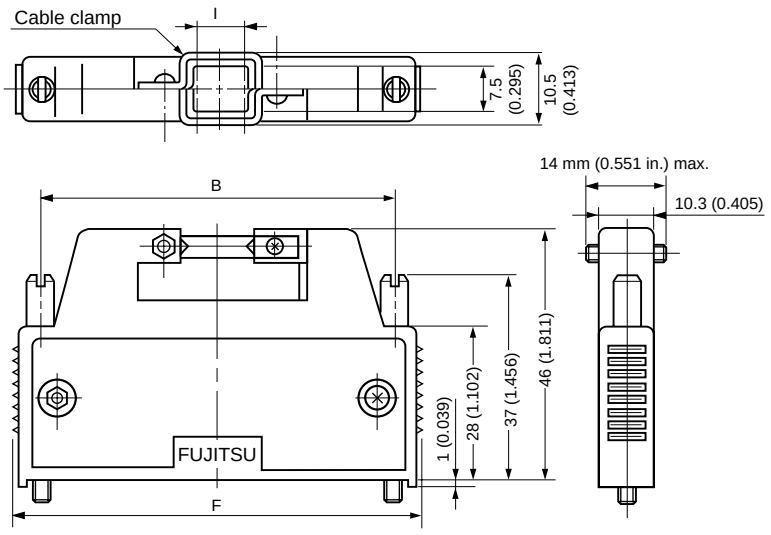

Unit: mm (in.)

■ EXPLODED VIEW

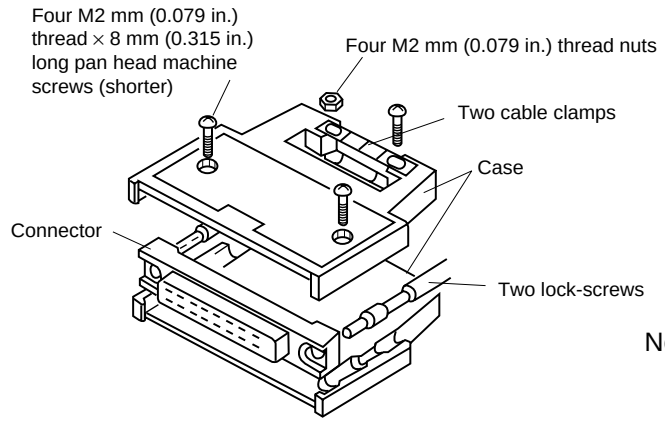

Note: The screws, nuts, cable clamp, and lock-screws are attached to the cover.

■ PART NUMBERS AND DIMENSIONS

Number of contacts	Part number	Dimensions: mm (in.)		
		B	F	I
40	FCN-360C040-D	63.98 (2.518)	72.72 (2.862)	8.0 (0.314)
48	FCN-360C048-D	74.14 (2.918)	82.88 (3.262)	12.0 (0.472)
56	FCN-360C056-D	84.30 (3.318)	93.04 (3.662)	16.0 (0.629)
64	FCN-360C064-D	94.46 (3.718)	103.20 (4.062)	20.0 (0.789)

COVER (LONG-SCREW TYPE) (TYPE E)

■ DIMENSIONS

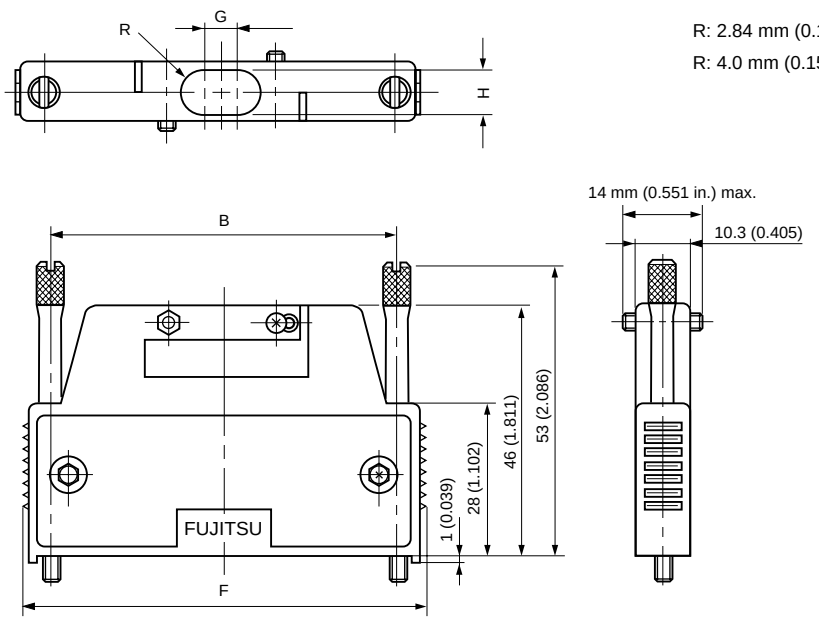

R: 2.84 mm (0.112 in.) (8 and 16 contacts)
R: 4.0 mm (0.157 in.) (24 and 64 contacts)

Unit: mm (in.)

■ EXPLODED VIEW

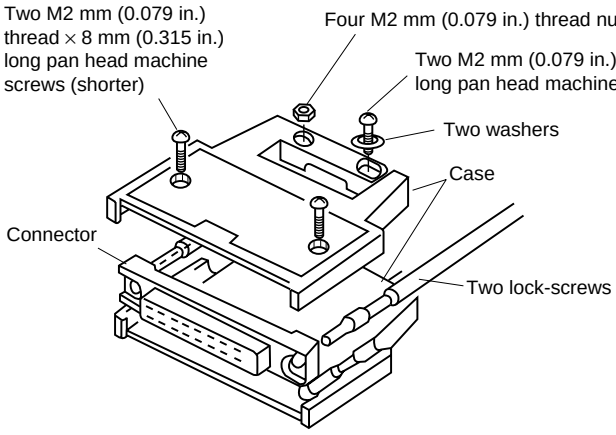

Note: The screws, nuts, washers, and lock-screws are attached to the cover.

■ PART NUMBERS AND DIMENSIONS

Number of contacts	Part number	Dimensions: mm (in.)			
		B	F	G	H
8	FCN-360C008-E	23.34 (0.918)	32.08 (1.262)	—	ϕ 5.7 (0.224)
16	FCN-360C016-E	33.50 (1.318)	42.24 (1.662)	—	ϕ 5.7 (0.224)
24	FCN-360C024-E	43.66 (1.718)	52.40 (2.062)	—	ϕ 8.0 (0.314)
32	FCN-360C032-E	53.82 (2.118)	62.56 (2.462)	2.0 (0.078)	8.0 (0.314)
40	FCN-360C040-E	63.98 (2.518)	72.72 (2.862)	6.0 (0.236)	8.0 (0.314)
48	FCN-360C048-E	74.14 (2.918)	82.88 (3.262)	10.0 (0.393)	8.0 (0.314)
56	FCN-360C056-E	84.30 (3.318)	93.04 (3.662)	14.0 (0.551)	8.0 (0.314)
64	FCN-360C064-E	94.46 (3.718)	103.20 (4.062)	18.0 (0.708)	8.0 (0.314)

COVER (STRAIGHT CABLE-OUT COVER) (TYPE F)

■ DIMENSIONS

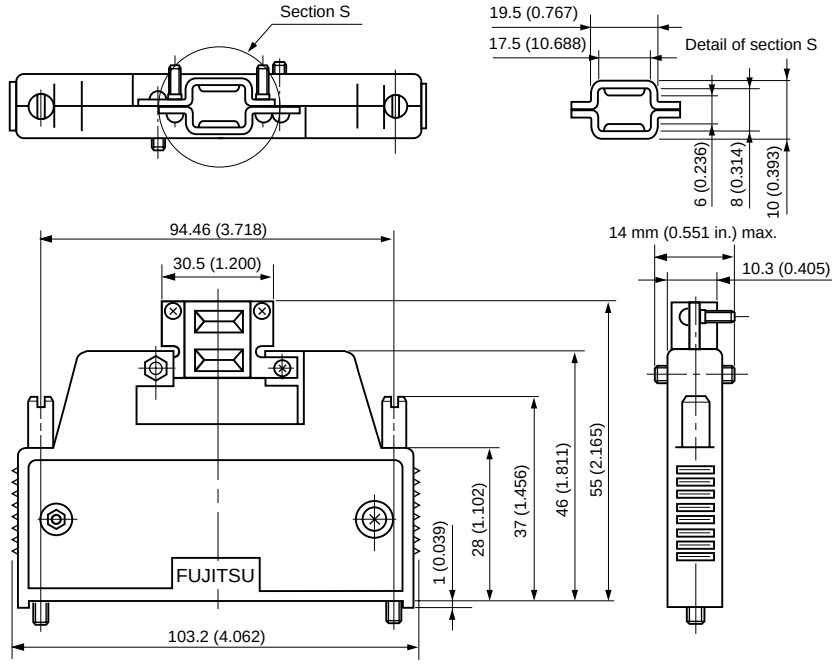

Unit: mm (in.)

■ EXPLODED VIEW

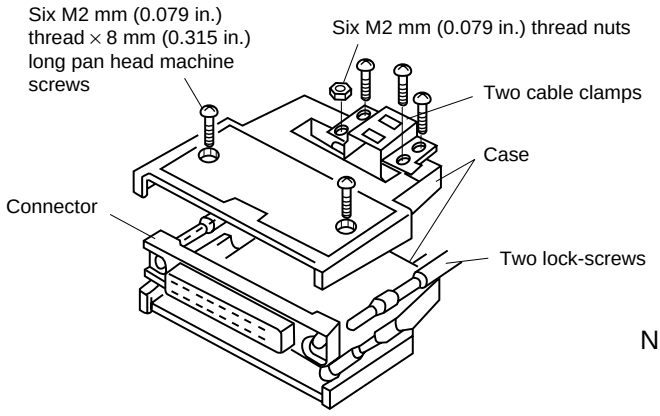

Note: The screws, nuts, cable clamps, and lock-screws are attached to the cover.

■ PART NUMBER

FCN-360C064-F

COVER (RIGHT ANGLE CABLE-OUT COVER) (TYPE G1)

■ DIMENSIONS

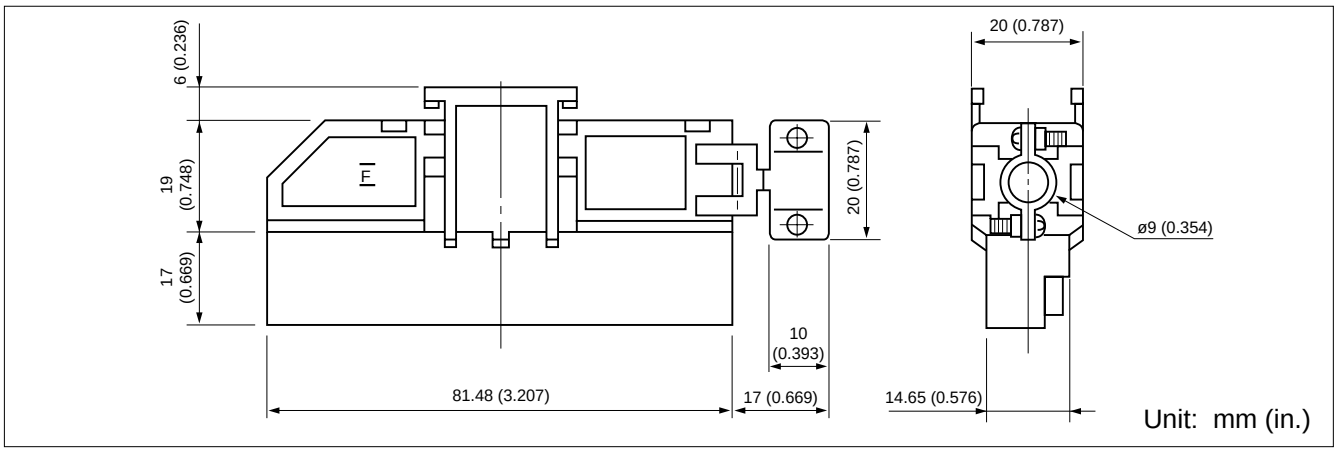

■ EXPLODED VIEW

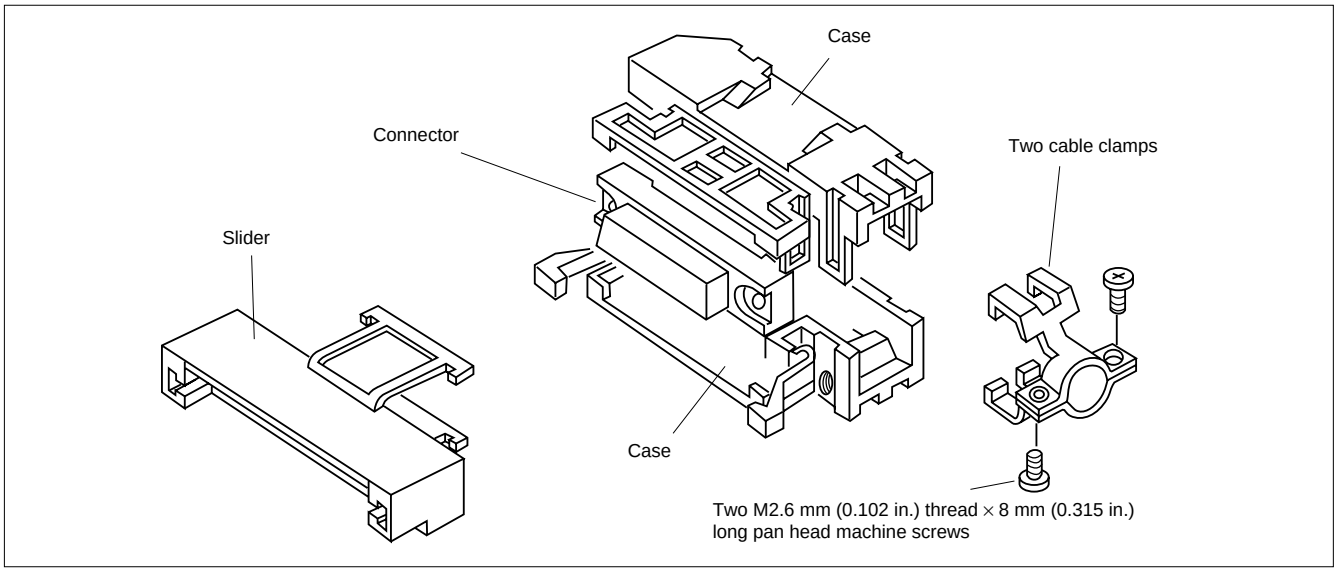

■ LOCKED STATE

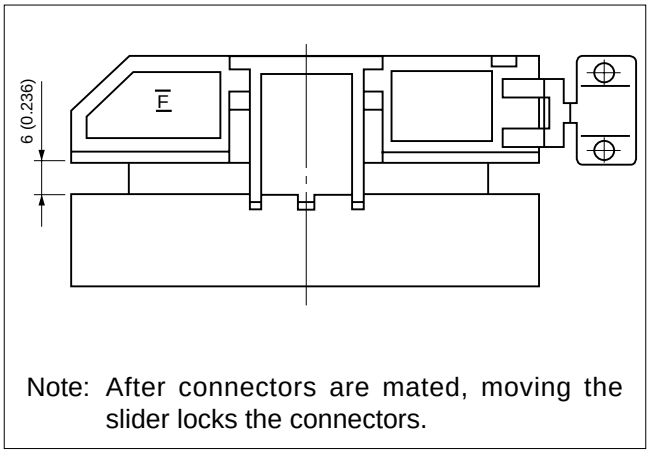

Note: After connectors are mated, moving the slider locks the connectors.

■ METAL FITTINGS

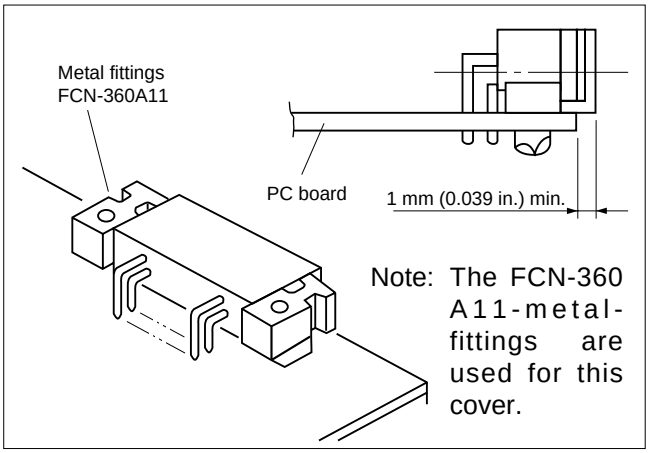

Note: The FCN-360 A11-metal-fittings are used for this cover.

■ PART NUMBER

FCN-360C040-G1

COVER (RIGHT ANGLE CABLEOUT COVER) (TYPE H/E)

■ DIMENSIONS

Material: Zync die cast

Plating: Nickel plating

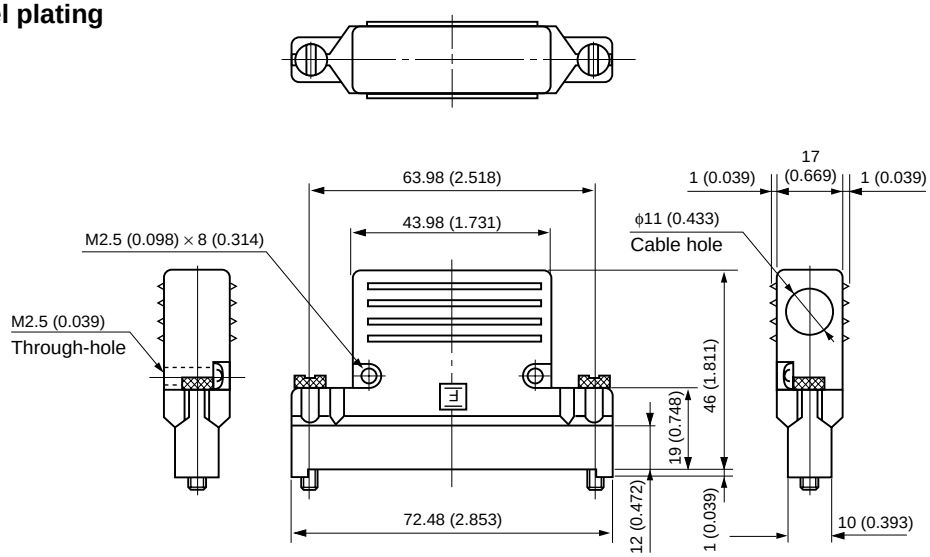

Unit: mm (in.)

■ EXPLODED VIEW

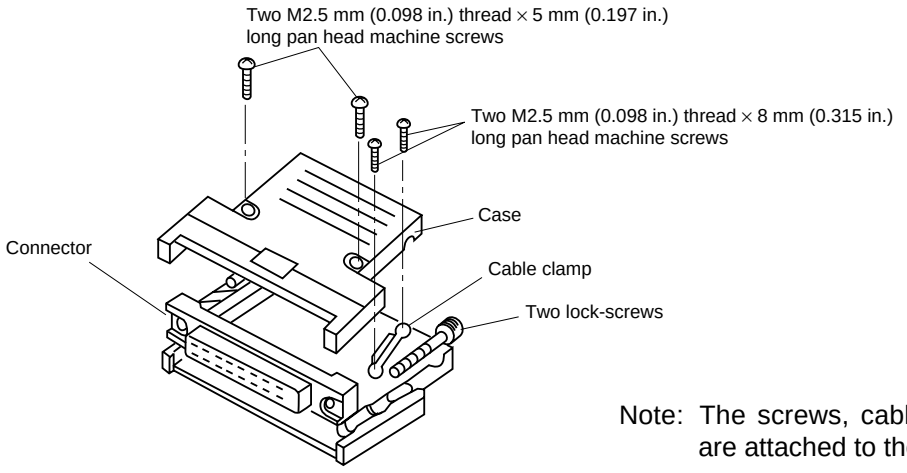

Note: The screws, cable clamp, and lock-screws are attached to the cover.

■ PART NUMBER

FCN-360C040-H/E

COVER (OBTUSE ANGLE CABLE-OUT COVER (40 CONTACTS ONLY)) (TYPE J1)

■ DIMENSIONS

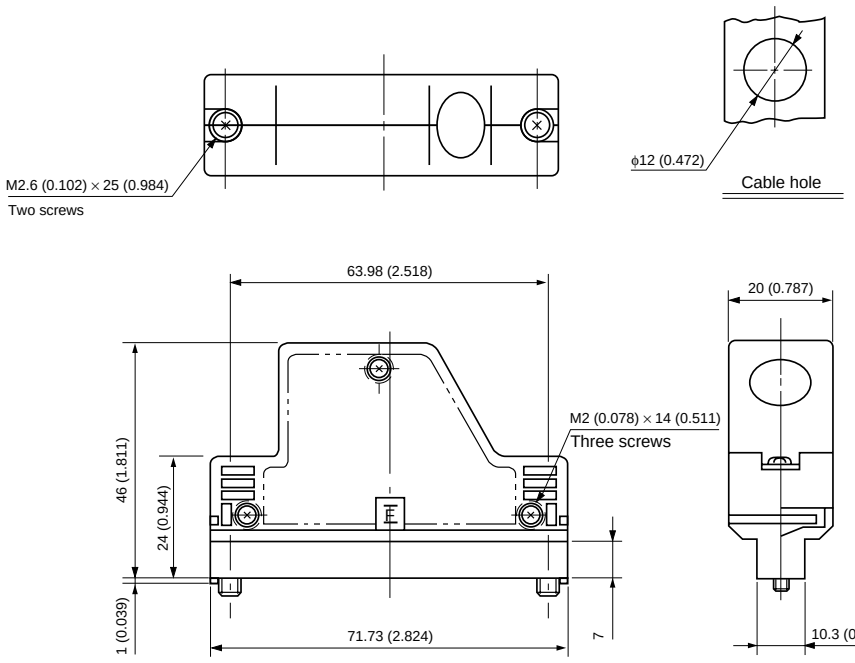

Unit: mm (in.)

■ EXPLODED VIEW

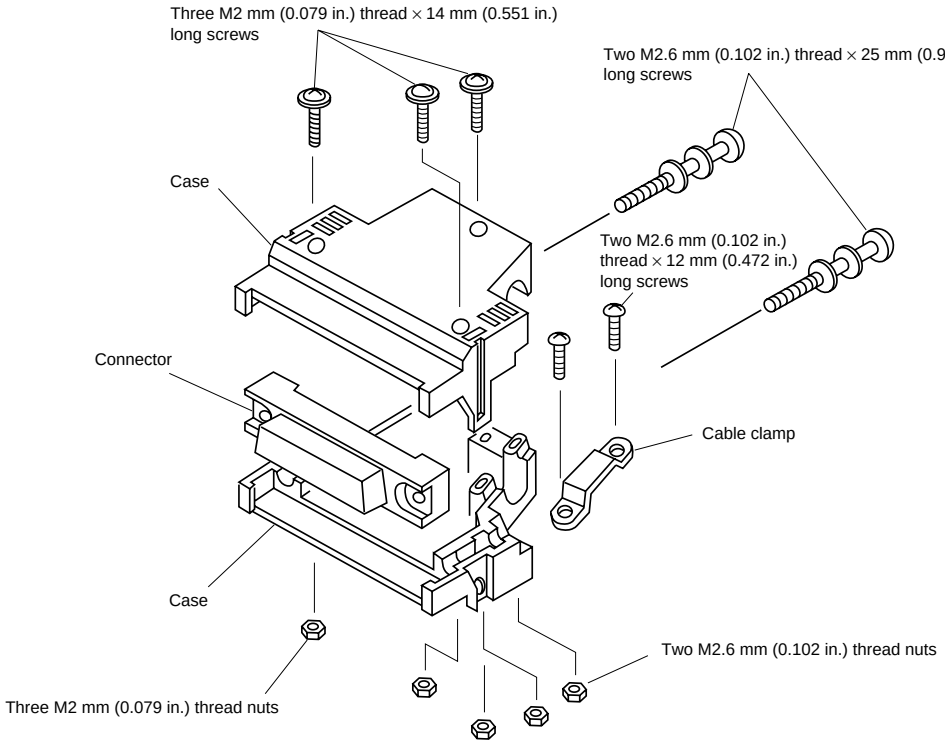

■ PART NUMBER

FCN-360C040-J1

LOW PROFILE COVER (OBTUSE ANGLE CABLE -OUT) (TYPE J2)

■ DIMENSION

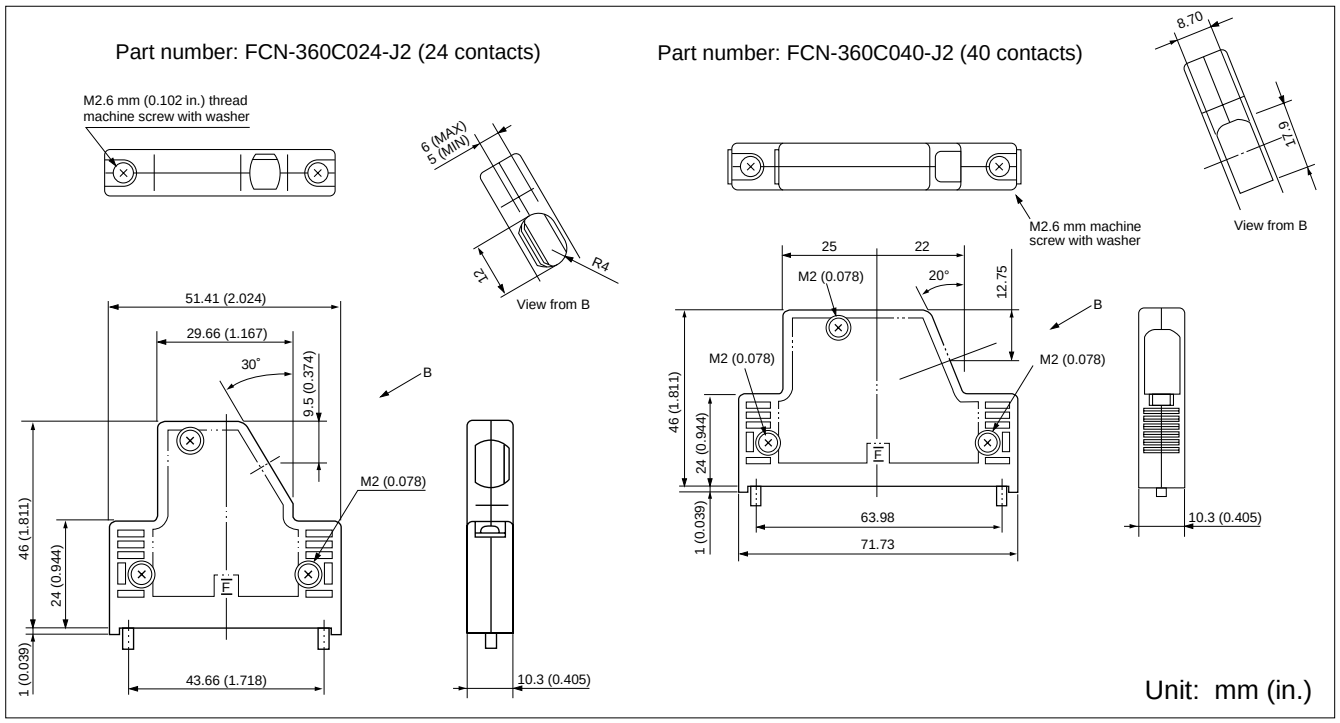

■ EXPLODED VIEW

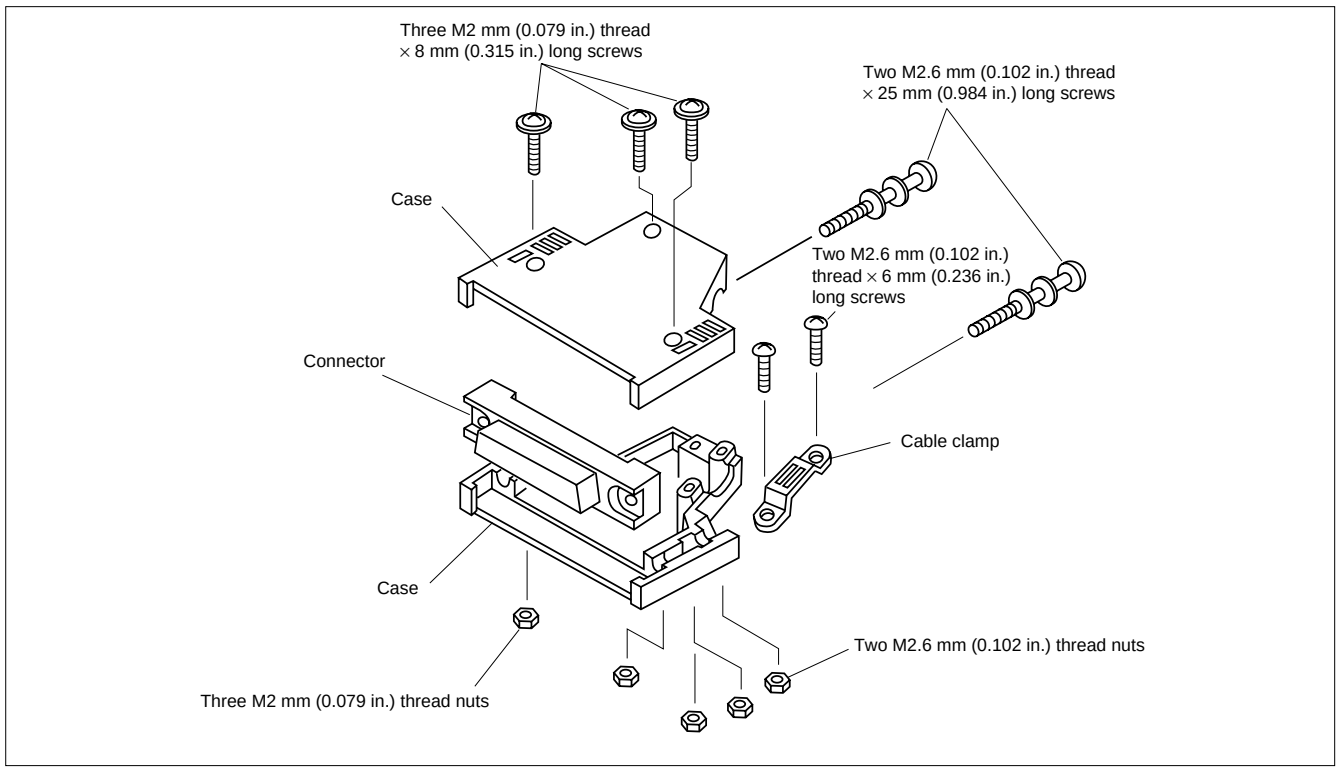

■ PART NUMBER

FCN-360C024-J2

FCN-360C040-J2

ACCESSORIES
■ MOUNTING SYLE

[Straight mounting metal fitting]

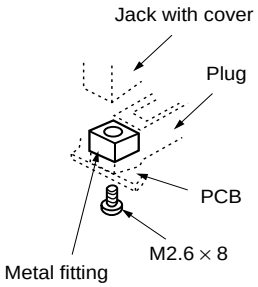

Note: The M2.6 mm (0.102 in.) thread × 8 mm (0.315 in.) long machine screw shall be separately prepared.

[Right-angle mounting metal fitting]

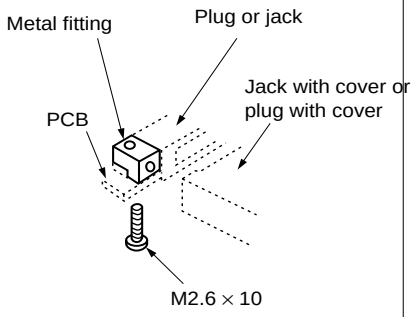

Note: The M2.6 mm (0.102 in.) thread × 10 mm (0.394 in.) long machine screw shall be separately prepared.

[Straight mounting round metal fitting]

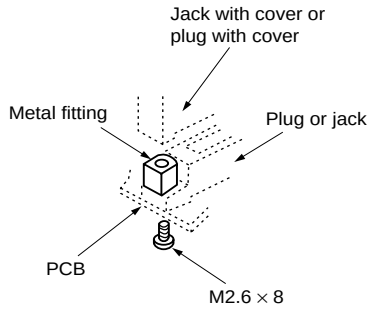

Note: The M2.6 mm (0.102 in.) thread × 8 mm (0.315 in.) long machine screw shall be separately prepared.

■ SELECTION OF METAL FITTINGS ACCORDING TO COMBINATION OF CONNECTORS AND COVERS

Plug \ Jack			Cover mounting side									
			361J		362J		363J		364J		367J	
			With cover	Without cover	With cover	Without cover	With cover	Without cover	With cover	Without cover	With cover	Without cover
Metal fitting mounting side	361P	Metal fitting part number	FCN-360A4	FCN-360A5	FCN-360A4	FCN-360A5	FCN-360A4	FCN-360A5	FCN-360A4	FCN-360A5	—	FCN-360A5
	362P		FCN-360A1	FCN-360A6	FCN-360A1	FCN-360A6	FCN-360A1	FCN-360A6	FCN-360A1	FCN-360A6	—	FCN-360A6
	364P		FCN-360A1	FCN-360A6	FCN-360A1	FCN-360A6	FCN-360A1	FCN-360A6	FCN-360A1	FCN-360A6	—	FCN-360A6
	365P		FCN-360A2	FCN-360A3	FCN-360A2	FCN-360A3	FCN-360A2	FCN-360A3	FCN-360A2	FCN-360A3	—	FCN-360A3

Jack \ Plug			Cover mounting side					
			361P		361P		364P	
			With cover	Without cover	With cover	Without cover	With cover	Without cover
Metal fitting mounting side	361J	Metal fitting part number	FCN-360A4	FCN-360A5	—	FCN-360A7	—	FCN-360A7
	362J		FCN-360A4	FCN-360A5	—	FCN-360A7	—	FCN-360A7
	363J		FCN-360A4	FCN-360A5	—	FCN-360A7	—	FCN-360A7
	364J		FCN-360A4	FCN-360A5	—	FCN-360A7	—	FCN-360A7
	365J		FCN-360A10 (FCN-360A8)	FCN-360A9	—	FCN-360A9	—	FCN-360A9
	367J		FCN-360A4	FCN-360A5	—	FCN-360A7	—	FCN-360A7

Note: When the jack or plug without a cover (shaded part) is used, have M2.6 × 8 mm machine screws ready inorder to tighten the connector.

■ SHAPES AND DIMENSIONS OF METAL FITTINGS

1.Straight Mounting Metal Fittings

Shape	Part number / Symbol	FCN-360A1	FCN-360A6
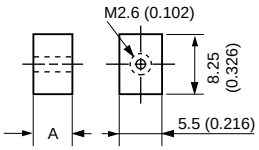 Unit: mm (in.)	A	5.3 (0.208)	6.3 (0.248)

2.Right-angle Mounting Metal Fittings

Shape	Part number / Symbol	FCN-360A2	FCN-360A3
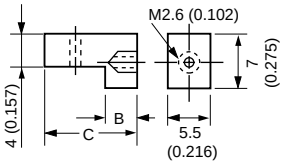 Unit: mm (in.)	B	3 (0.118)	4 (0.157)
	C	9 (0.354)	10 (0.393)

Shape	Part number / Symbol	FCN-360A8	FCN-360A9
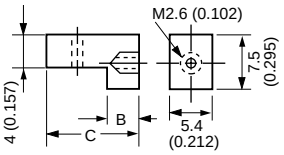 Unit: mm (in.)	B	5.3 (0.208)	6.3 (0.248)
	C	13.3 (0.523)	14.3 (0.526)

Part number / Symbol	FCN-360A10
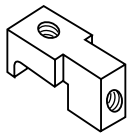	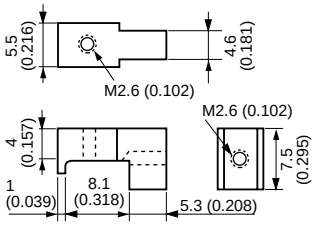 Unit: mm (in.)

Part number / Symbol	FCN-360A11
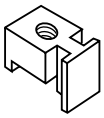	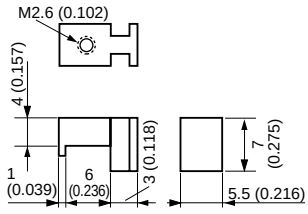 Unit: mm (in.)

3.Straight Mounting Round Metal Fittings

Shape	Part number / Symbol	FCN-360A4	FCN-360A5	FCN-360A7
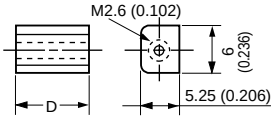 Unit: mm (in.)	D	7.1(0.279)	9.9 (0.389)	8.1 (0.318)

Contact

Japan
FUJITSU COMPONENT LIMITED
Shinagawa Seaside Park Tower
12-4, Higashi-shinagawa 4-chome,
Tokyo 140 0002, Japan
Tel: (81-3) 3450-1681
Fax: (81-3) 3474-2385
Email: fcl-contact@cs.jp.fujitsu.com
Web: www.fujitsu.com/jp/group/fcl/en/

North and South America
FUJITSU COMPONENTS AMERICA, INC.
2290 North First Street, Suite 212
San Jose, CA 95131 U.S.A.
Tel: (1-408) 745-4900
Fax: (1-408) 745-4970
Email: components@us.fujitsu.com
Web: http://us.fujitsu.com/components/

Europe
FUJITSU COMPONENTS EUROPE B.V.
Diamantlaan 25
2132 WV Hoofddorp
Netherlands
Tel: (31-23) 5560910
Fax: (31-23) 5560950
Email: info@fceu.fujitsu.com
Web: emea.fujitsu.com/components/

Asia Pacific
FUJITSU COMPONENTS ASIA, Ltd.
102E Pasir Panjang Road
#01-01 Citilink Warehouse Complex,
Singapore 118529
Tel: (65) 6375-8560 / Fax: (65) 6273-3021
Email: fcal@sg.fujitsu.com
www.fujitsu.com/sg/products/devices/components/

China
FUJITSU ELECTRONIC COMPONENTS (SHANGHAI) CO., LTD.
Unit 4306, InterContinental Center
100 Yu Tong Road, Shanghai 200070, China
Tel: (86 21) 3253 0998 /Fax: (86 21) 3253 0997
Email: fcal@sg.fujitsu.com
www.fujitsu.com/sg/products/devices/components/

Hong Kong
FUJITSU COMPONENTS HONG KONG Co., Ltd.
Room 06, 28/F, Greenfield Tower, Concordia Plaza, No.1 Science Museum Road,
Tsim Sha Tsui East, Kowloon, Hong Kong
Tel: (852) 2881 8495 Fax: (852) 2894 9512
Email: fcal@sg.fujitsu.com
www.fujitsu.com/sg/products/devices/components/

Korea
FUJITSU COMPONENTS KOREA, LTD.
Alpha Tower #403,
645 Sampyeong-dong,
Bundang-gu, Seongnam-si,
Gyeonggi-do, 13524 Korea
Tel: (82 31) 708-7108
Fax: (82 31) 709-7108
Email: fcal@sg.fujitsu.com
www.fujitsu.com/sg/products/devices/components/

Copyright

All trademarks or registered trademarks are the property of their respective owners. Fujitsu Components America or its affiliates do not warrant that the content of datasheet is error free. In a continuing effort to improve our products Fujitsu Components America, Inc. or its affiliates reserve the right to change specifications/datasheets without prior notice. Copyright ©2020 Fujitsu Components America, Inc. All rights reserved. Revised October 9, 2020.