SOLID STATE RELAY (I/O Module)

MAXIMUM LOAD CURRENT 1 A

SN SERIES

RoHS compliant

■ FEATURES



- I/O modules for interface between CPU and external input devices or loads
- Ultra slim and light weight, SIL terminals type I/O modules for high density mounting
  —Size: 5 (W) × 20 (L) × 17 (H) mm
  —Weight: approximately 3.0 to 3.5 g
- High isolation by employing photo-coupled devices (between input and output: 2,500 V rms)
- Long life and maintenance free
- All solid state I/O module
- Compatible with NY relay size and terminals arrangement (only output module type)
- RoHS compliant since date code: 6703 (except 204-207)
  Please see page 9 for more information

■ ORDERING INFORMATION

- INPUT MODULE

[Example] SN (a) – A (b) 100 BF (c)

(a)	Series Name	SN : SN Series
(b)	Input Voltage	A: AC type D: DC type
(c)	Nominal Voltage	100 BF: 100 VAC 200 BF: 200 VAC 12/24 B: 12/24 VDC

● OUTPUT MODULE

[Example] SN – 12 D 01 HZ – C R T
(a) (b) (c) (d) (e) (f) (g) (h)

(a)	Series Name	SN : SN Series
(b)	Nominal Voltage (Input side)	3: 3 VDC (only AC type) 5: 5 VDC 12: 12 VDC 24: 24 VDC
(c)	Load Voltage	A: AC type D: DC type
(d)	Load Current	01 : 1 A
(e)	Kinds of Inverse Connection Protecting Element DC type	AC type Nil : with varistor NV: without varistor Nil : Diode HZ: Zener diode
(f)	Zero Cross function (AC type)	F : without zero cross function C : with zero cross function
(g)	Output Polarity (DC type)	Nil : Standard polarity R : Reverse polarity
(h)	Switching Speed (DC type)	Nil : Standard T : High speed type

■ SPECIFICATIONS

• INPUT MODULE (SN-( ) B Type)

Item		AC Input module		DC Input module		Remarks
		100 VAC Type	200 VAC Type	12/24 VDC Type		
INPUT side	Input Voltage Range	80 to 132 Vrms	160 to 265 Vrms	9.6 to 28.8 VDC		
	Rating Input Current	Approx. 7 mArms		Approx. 5 mA (at 12 VDC)	Approx. 10 mA (at 24 VDC)	
	Power Frequency Range	47 to 63 Hz		—	—	
	Must Operate Voltage (max.)	80 Vrms	160 Vrms	9.6 VDC		
	Must Release Voltage (max.)	30 Vrms	60 Vrms	5.0 VDC		
	Must Release Current (min.)	2 mArms		1.5 mA		
OUTPUT side	DC Supply Voltage	4 to 6 VDC				V_{DD}
	Maximum Output Current	±4 mA		±0.4 mA		V_{DD} = 5 V
	Output Logic	Operate with negative true logic (active low)				
Maximum Operate Time (max.)		25 ms		10 ms		
Maximum Release Time (max.)		30 ms		10 ms		
Insulation Resistance (initial value)		Minimum 1,000 M Ω(at 500 VDC)				for input-output
Dielectric Strength		2,500 Vrms 1 minute				
Operating Temperature Range		–30°C to + 85°C				no frost
Storage Temperature Range		–40°C to +100°C				
Case Color		Yellow		White		
Weight		Approximately 2.0 g		Approximately 3.3 g		

• OUTPUT MODULE Standard Type

Item / Remarks			AC Output module: with zero cross	AC Output module: without zero cross	DC Output module	
INPUT side	Nominal Voltage (DC)		3 V, 5 V, 12 V, 24 V		5 V, 12 V, 24 V	
	Operate Voltage Range		±20% of nominal voltage			
	Must Operate Voltage		max.80% of nominal voltage			
	Must Release Voltage		Minimum 1 VDC (minimum 0.5 V*)			*3 VDC type
	Input Impedance (±10%)	3 VDC Type	130 Ω	180 Ω	—	
		5 VDC Type	330 Ω	470 Ω	390 Ω	
		12 VDC Type	1,0k Ω	1,5k Ω	1,2k Ω	
		24 VDC Type	2,2k Ω	3,0k Ω	2.4k Ω	
OUTPUT side	Load Voltage Range		24 to 265 Vrms		3 to 30 VDC	
	Maximum Load Current		1.0 Arms		1.0 A	see CHARACTERISTIC DATA
	Minimum Load Current		10 mArms		1 mA	
	Switching Current		50 A (60 Hz)		3 A (10 ms)	
Max. Off-State	Leakage Current		1.5 mArms (at 100 Vrms 60 Hz) 3.0 mArms (at 200 Vrms 60 Hz)		0.1 mA (at 30 VDC)	
	Max. On-State Voltage Drop		1.2 Vrms		1.2 V	at max. load current
Maximum Operate Time (max.)			1 ms	1/2 cycle ±1 ms	1 ms	
Maximum Release Time			1/2 cycle + 1ms		1 ms	
Insulation Resistance			Minimum 1,000 M Ω		(at 500 VDC)	for input-output
Dielectric Strength			2,500 Vrms 1 minute			
Operating Temperature Range			–30°C to + 85°C			no
Storage Temperature Range			–40°C to +100°C			frost
Case Color			Black		Red	
Weight			Approximately 3.5 g		Approximately 2.9 g	

• OUTPUT MODULE High Speed Switching Type

Item			AC Output module	Remarks
INPUT side	Nominal Voltage (DC)		5 V, 12 V, 24 V	
	Operate Voltage Range		±20% of nominal voltage	
	Must Operate Voltage		80% of nominal voltage	
	Must Release Voltage		Minimum 1 V	
	Input Impedance	5 VDC Type	330 Ω ±10%	
		12 VDC Type	1,0 k Ω ±10%	
		24 VDC Type	2,0 k Ω ±10%	
OUTPUT side	Load Voltage		DC3 to 30V	
	Maximum Load Current		1.0 A	see CHARACTERISTIC DATA
	Minimum Load Current		1 mA	
	Switching Current		3 A (10 ms)	
	Max. Off-State Leakage Current		0.1 mA (at 30 VDC)	
	Max. On-State Voltage Drop		1.2 V	at max. load current at DC 5 V 0.1A
Maximum Operate Time			max. 5 µs	
Maximum Release Time			max. 25 µs	
Insulation Resistance			Minimum 1,000 M Ω (at 500 VDC)	for input-output
Dielectric Strength			2,500 V rms 1 minute	
Operating Temperature Range			–40°C to + 100°C	
Storage Temperature Range			–30°C to + 85°C	
Case Color			Red	
Weight			Approximately 2.9 g	

■ BLOCK DIAGRAM

• INPUT MODULE

LOAD		INSULATION CIRCUITS	Input/Output waveform (resistive load)
Photo-transistor coupler DC Logic output		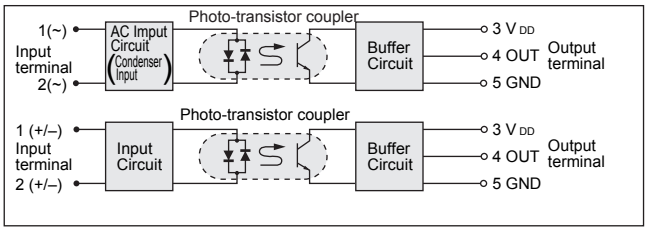	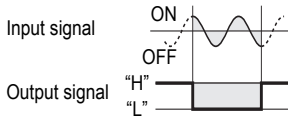
	Photo-transistor coupler		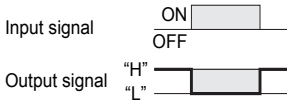

• OUTPUT MODULE

LOAD (resistive load)	INSULATION CIRCUITS	Input/Output waveform	
AC Photo-triac coupler	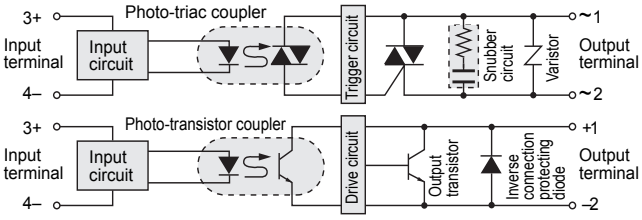	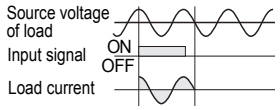	
DC Photo-transistor coupler		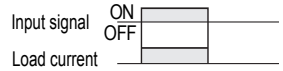	

* AC type without varistor / DC type with zenor diode available.

■ CHARACTERISTIC DATA

• OUTPUT MODULE

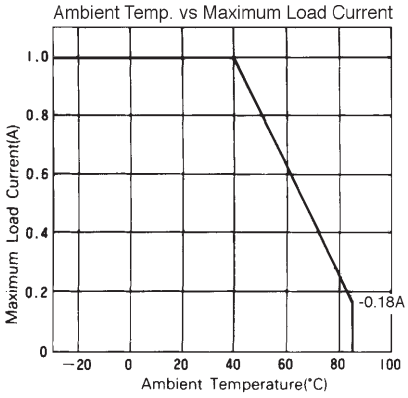

■ REFERENCE DATA

● INPUT MODULE

Distribution of Operate & Release Voltage
(AC Type)

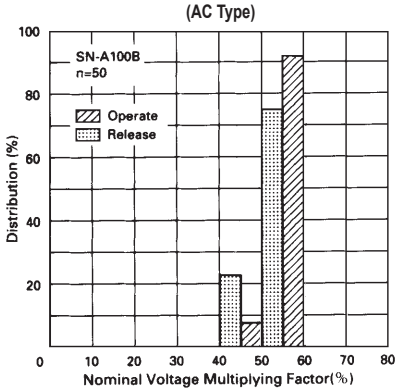

High temperature Switching Test
(AC Type)

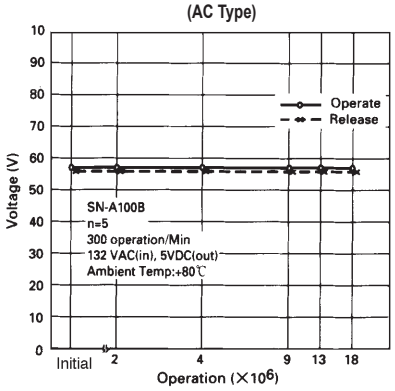

High temperature Continuous Operating Test
(AC Type)

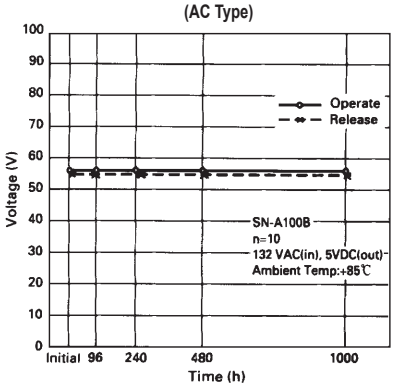

● OUTPUT MODULE

Distribution of Operate & Release Voltage
(AC Type)

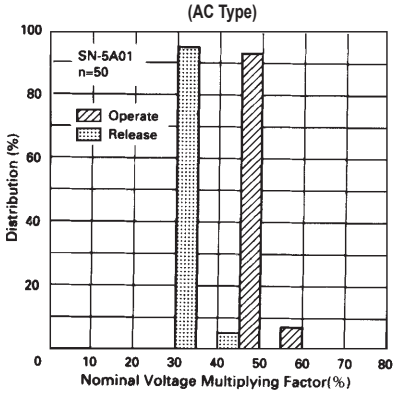

Distribution of Operate & Release Voltage
(DC Type)

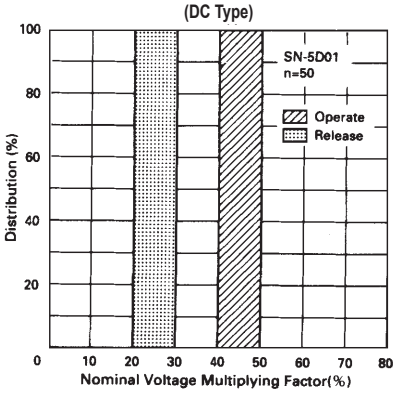

Distribution of On-State Voltage Drop
(AC Type)

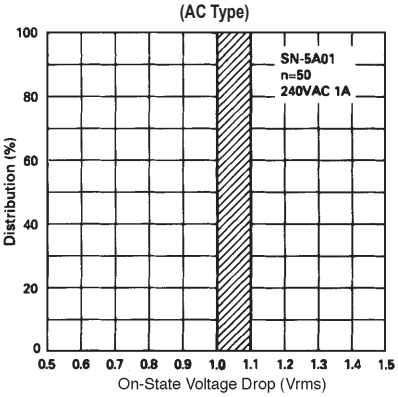

■ DIMENSIONS

● **Dimensions**

SN-A ( ) type (input module)

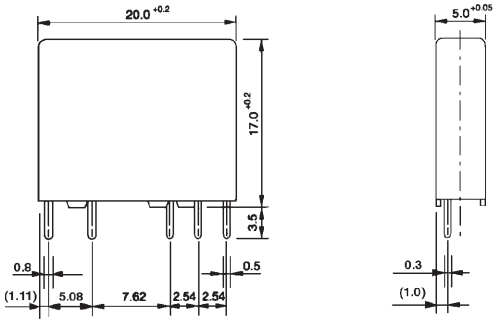

SN-D ( ) type (input module)

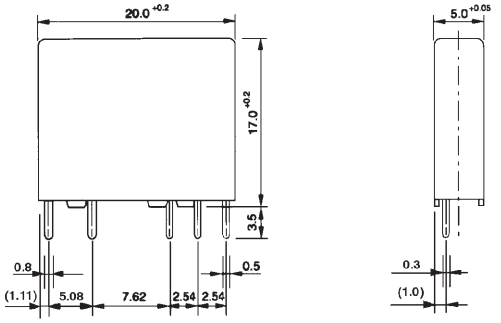

SN-A ( ) type (output module)

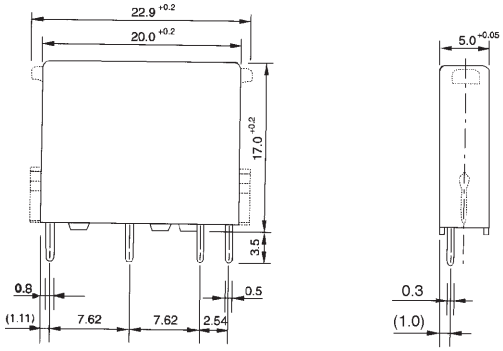

Dotted line : Socket mounting SN-( )A-S type

SN-( ) D, ( )D ( ) R type (output module)

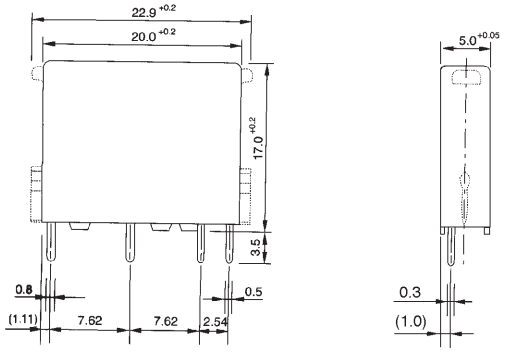

Dotted line : Socket mounting SN-( )D-S type

● **Schematics**
(BOTTOM VIEW)

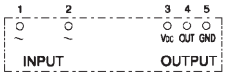

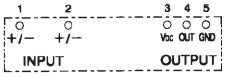

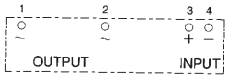

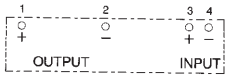

● **PC board mounting hole layout**
(BOTTOM VIEW)

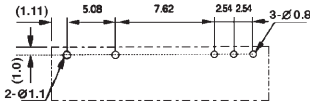

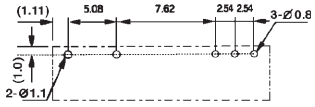

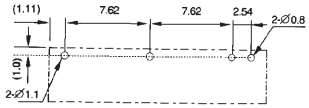

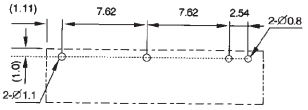

* Reverse polarity type available

Unit: mm

■ Socket Dimensions

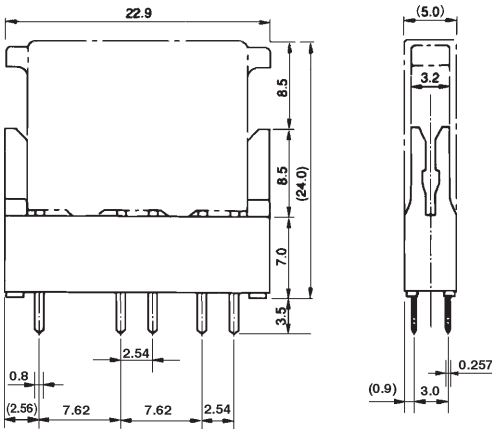

■ Socket PC board mounting hole layout

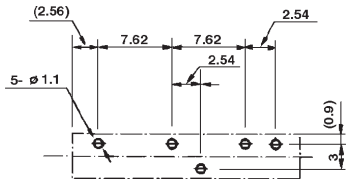

Unit: mm

■ NOTES

1. Polarity of terminals is pre-determined. Please design your circuit accordingly.
2. Socket ordering code: JL-5N
3. Standard IC socket is not recommended. Please use socket “JL-5N”.
4. When switching inductive load by AC output module without varistor, please connect a varistor as shown in drawing below.
5. AC input module has inside logic IC. Please connect bypass condenser (approx. 0.01μ) at pivotal points between VDD and GND. (Conform to general handling instructions for logic IC.)

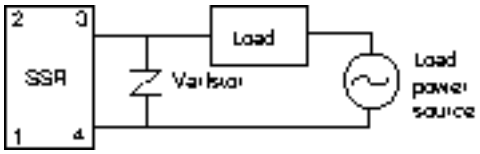

RoHS Compliance and Lead Free Relay Information

1. General Information

- Relays produced after the specific date code that is indicated on each data sheet are lead-free now. Most of our signal and power relays are lead-free. Please refer to Lead-Free Status Info. (http://www.fujitsu.com/us/downloads/MICRO/fcai/relays/lead-free-letter.pdf)
- Lead free solder paste currently used in relays is Sn-3.0Ag-0.5Cu.
- All signal and most power relays also comply with RoHS. Please refer to individual data sheets. Relays that are RoHS compliant do not contain the 5 hazardous materials that are restricted by RoHS directive (lead, mercury, chromium IV, PBB, PBDE).
- It has been verified that using lead-free relays in leaded assembly process will not cause any problems (compatible).
- "LF" is marked on each outer and inner carton. (No marking on individual relays).
- To avoid leaded relays (for lead-free sample, etc.) please consult with area sales office.
- We will ship leaded relays as long as the leaded relay inventory exists.

Note: Cadmium was exempted from RoHS on October 21, 2005. (Amendment to Directive 2002/95/EC)

2. Recommended Lead Free Solder Profile

- Recommended solder paste Sn-3.0Ag-0.5Cu.

Reflow Solder condtion

Flow Solder condtion:	
Pre-heating:	maximum 120˚C
Soldering:	dip within 5 sec. at 260˚C soler bath

Solder by Soldering Iron:	
Soldering Iron Temperature:	maximum 360˚C
Duration:	maximum 3 sec.

We highly recommend that you confirm your actual solder conditions

3. Moisture Sensitivity

- Moisture Sensitivity Level standard is not applicable to electromechanical realys.

4. Tin Whisker

- Dipped SnAgCu solder is known as low risk tin whisker. No considerable length whisker was found by our in house test.

Fujitsu Components International Headquarter Offices

Japan
Fujitsu Component Limited
Gotanda-Chuo Building
3-5, Higashigotanda 2-chome, Shinagawa-ku
Tokyo 141 8630, Japan
Tel: (81-3) 5449-7010
Fax: (81-3) 5449-2626
Email: promothq@fcl.fujitsu.com
Web: www.fcl.fujitsu.com

North and South America
Fujitsu Components America, Inc.
250 E. Caribbean Drive
Sunnyvale, CA 94089 U.S.A.
Tel: (1-408) 745-4900
Fax: (1-408) 745-4970
Email: components@us.fujitsu.com
Web: http://www.fujitsu.com/us/services/edevices/components/

Europe
Fujitsu Components Europe B.V.
Diamantlaan 25
2132 WV Hoofddorp
Netherlands
Tel: (31-23) 5560910
Fax: (31-23) 5560950
Email: info@fceu.fujitsu.com
Web: emea.fujitsu.com/components/

Asia Pacific
Fujitsu Components Asia Ltd.
102E Pasir Panjang Road
#01-01 Citilink Warehouse Complex
Singapore 118529
Tel: (65) 6375-8560
Fax: (65) 6273-3021
Email: fcal@fcal.fujitsu.com
Web: http://www.fujitsu.com/sg/services/micro/components/

©2006 Fujitsu Components America, Inc. All rights reserved. All trademarks or registered trademarks are the property of their respective owners.

Fujitsu Components America or its affiliates do not warrant that the content of datasheet is error free. In a continuing effort to improve our products Fujitsu Components America, Inc. or its affiliates reserve the right to change specifications/datasheets without prior notice.
Rev. August 1/2006