SOLID STATE RELAY (I/O MODULE)
MAXIMUM LOAD CURRENT 1A

SN Series

RoHS Compliant

■ FEATURES



- I/O modules for interface between CPU and external input devices or loads
- Ultra slim and light weight, SIL terminals type I/O modules for high density mounting
  - Size: 5 (W) × 20 (L) × 17 (H) mm
  - Weight: Approximately 3.0 to 3.5 g
- High isolation by employing photo-coupled devices (between input and output: 2,500Vrms)
- Long life and maintenance free
- All solid state I/O module
- Compatible with NY relay size and terminals arrangement (only output module type)
- RoHS compliant since date code: 6703 (except 204-207)

The piece-parts used in this relay contains lead but it is excluded from controlled substances.

■ APPLICATIONS

PLC etc.

■ PART NUMBERS

● Input Module

[Example] SN - A 100 B F
(a) (b) (c) (d) (e)

(a)	Relay type		SN series
(b)	Input voltage		A : AC type D : DC type
(c)	Nominal voltage (input side)		100 : 100VAC 200 : 200VAC 12/24 : 12/24VDC
(d)	Output	AC type	Nil : Without buffer B : With buffer
		DC type	B : With buffer
(e)	Enclosure	AC type with buffer	Nil : Plastic sealed (only for 100VAC) F : Flux free
		DC type with buffer	Nil : Plastic sealed

● Output Module

[Example] SN - 12 D 01 HZ - C R T - S
(a) (b) (c) (d) (e) (f) (g) (h) (i)

(a)	Relay type		SN series
(b)	Nominal voltage (input side)		3 : 3VDC (only AC type) 5 : 5VDC 12 : 12VDC 24 : 24VDC
(c)	Load voltage		A : AC type D : DC type
(d)	Load current		01 : 1A
(e)	Kind of inverse connection protecting element	AC type	Nil : With varistor NV : Without varistor
		DC type	Nil : Diode HZ : Zener diode
(g)	Output polarity (DC type)		Nil : Standard polarity R : Reverse polarity
(h)	Switching speed (DC type)		Nil : Standard T : High speed type
(i)	Mounting		Nil : PCB mounting type S : Socket mounting type

■ SPECIFICATIONS

● AC Input Module (SN-A( )B type)

Item		Specifications				
		100VAC Type			200VAC Type	
		Without Buffer	With Buffer		Without Buffer	With Buffer
		Plastic Sealed		Flux Free	Plastic Sealed	Flux Free
Input side	Input voltage range	80 to 132VACrms			160 to 265VACrms	
	Rating input current	Approx. 8.4mArms	Approx. 7mArms		Approx. 7.8mArms	Approx. 7mArms
	Power frequency range	47 to 63Hz				
	Must operate voltage	Max. 70VACrms	Max. 80VACrms		Max. 150VACrms	Max.160VACrms
	Must release voltage	Min. 25VACrms	Min. 30VACrms		Min. 60VACrms	Min. 60VACrms
	Must release current	Min. 2mArms				
Output side	DC supply voltage (V_{DD})	-	4 to 6VDC		-	4 to 6VDC
	Max. output current (V_{DD}=5V)	Max. 0.5mA	±4mA		Max.0.5mA	±4mA
	Output logic	-	Negative logic		-	Negative logic
Temper-ature	Storage temperature range	-40°C to +100°C (no frost)				
	Operating temperature range	-30°C to +85°C (no frost)				
Time	Max. operate time	Max. 20ms	Max. 25ms		Max. 20ms	Max. 25ms
	Max. release time	Max. 20ms	Max. 30ms		Max. 20ms	Max.30ms
Buffer		Absence	Presense		Absence	Presense
Insula-tion	Insuration resistance	Min. 1,000 MΩ (at 500VDC, for input-output)				
	Dielecctric strength	2,500Vrms, 1 minute (for input-output)				
Others	Case color	Yellow		Ivory	Yellow	Ivory
	Weight (approx.)	3.2g	3.2g	2g	3.2g	2g
	Dimensions	5.0×20.0×17.0 mm				

■ SPECIFICATIONS

● DC Input Module (SN-D( )B type)

Item		Specifications
		12/24VDC, with Buffer, Plastic Sealed
Input	Input voltage range	9.6 to 28.8VDC
	Rating input current	Approx. 5mA (at 12VDC) / Approx. 10mA (at 24VDC)
	Must operate voltage	Max. 9.6VDC
	Must release voltage	Min. 5.0VDC
	Must release current	MIn. 1.5mA
Output	DC supply voltage (V_{DD})	4 to 6VDC
	Max. output current (V_{DD}=5V)	±0.4mA
	Output logic	Negative logic
Temperature	Storage temperature range	-40°C to +100°C (no frost)
	Operating temperature range	-30°C to +85°C (no frost)
Time	Operate time	10ms max.
	Release time	10ms max.
Buffer		Presense
Insulation	Insuration resistance (initial)	1,000MΩ (at 500VDC, for input-output)
	Dielectric strength	2,500Vrms, 1 minute (for inpuut-output)
Others	Case color	White
	Weight	Approx. 3.3g
	Dimensions	5.0×20.0×17.0 mm

■ SPECIFICATIONS

● Output Module (Standard)

Item			Specifications		
			AC Output Module		DC Output Module
			Without Zero Cross	With Zero Cross	
Input	Nominal voltage		3, 5, 12, 24VDC		5, 12, 24VDC
	Operate voltage range		±20% of nominal voltage		
	Must operate voltage		Max. 80% of nominal voltage		
	Must release voltage		Min.0.5VDC (3, 5VDC type)	Min. 1VDC	
			Min.1VDC (12, 24VDC type)		
	Input impedance	3VDC type	130Ω±10%	180Ω±10%	-
		5VDC type	330Ω±10%	470Ω±10%	390Ω±10%
		12VDC type	1,000Ω±10%	1,500Ω±10%	1,200Ω±10%
		24VDC type	2,200Ω±10%	3,000Ω±10%	2,500Ω±10%
Output	Load voltage range		24 to 265VACrms		3 to 30VDC
	Maximum load current (Please refer to characteristic data)		1.0Arms		1.0A
	Minimum load current		10mArms		1mA
	Switching current		50A (60Hz, 1 cycle)		3A (10ms)
	OFF-state leakage current		Max. 1.5mArms (100VACrms, at 60Hz) Max. 3.0mArms (200VACrms, at 60Hz)		Max. 0.1mA (at 30VDC)
	ON-state voltage drop (at max. load current)		Max. 1.2Vrms		Max.1.2V
Temperature	Storage temperature range		-40°C to +100°C (no frost)		
	Operate temperature range		-30°C to +85°C (no frost)		
Time	Operate time		Max. 1ms	Max. 1/2 cycle + 1ms	Max. 1ms
	Release time		Max. 1/2 cycle + 1ms		Max. 1ms
Others	Color		Black		Red
	Weight		Approx.3.5g		Approx. 2.9g
	Dimensions		5.0×20.0×17.0 mm (except protrusion)		

■ SPECIFICATIONS

● Output Module (High Speed Switching Type)

Item			Specification
			DC Output Module
Input	Nominal voltage		5, 12, 24VDC
	Operate voltage range		±20% of nominal voltage
	Must operate voltage		80% of nominal voltage
	Must release voltage		Min. 1VDC
	Input impedance	5VDC type	330Ω±10%
		12VDC type	1,000Ω±10%
		24VDC type	2,000Ω±10%
Output	Load voltage		3 to 30VDC
	Max. load current (Please refer to characteristic data)		1.0A
	Min. load current		1mA
	Switching current		3A (10ms)
	OFF-state leakage current		Max. 0.1mA (at 30VDC)
	ON-state voltage drop (at max. load current)		Max. 1.2V
Temperature	Storage temperature range		-40°C to +100°C (no frost)
	Operage temperature range		-30°C to +85°C (no frost)
Time	Operate time		Max. 5μs (at 0.1A, 5VDC)
	Release time		Max. 25μs (at 0.1A, 5VDC)
Others	Color		Red
	Weight		Approx.2.9g
	Dimensions		5.0×20.0×17.0 mm (except protrusion)

■ BLOCKING DIAGRAM

● Input Module

Load	Insulation Method	Insulation Circuits	Input/Output Waveform (Resistive load)
AC	Photo-transistor coupler	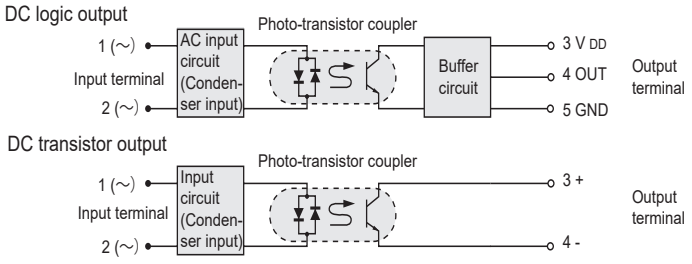	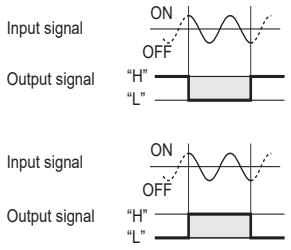
DC	Photo-transistor coupler	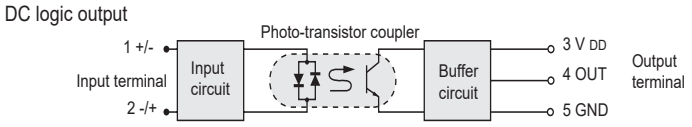	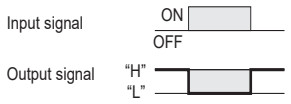

● Output Module

Load	Insulation Method	Insulation Circuits	Input/Output Waveform (Resistive load)
AC	Photo-triac coupler	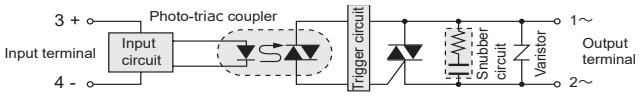	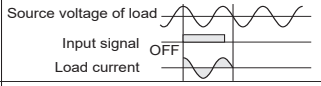
DC	Photo-transistor coupler	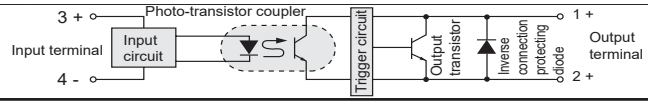	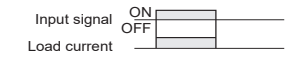

■ DIMENSIONS

● Dimensions

SN-A( )BF (AC input module, with buffer)

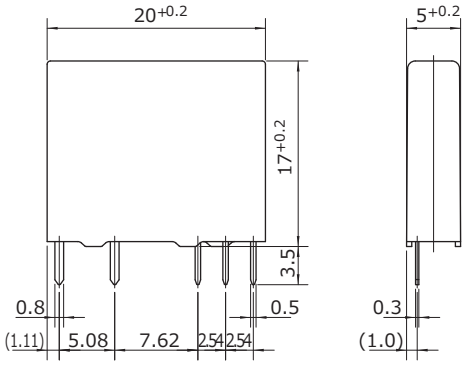

SN-A( ) (AC input module, without buffer)

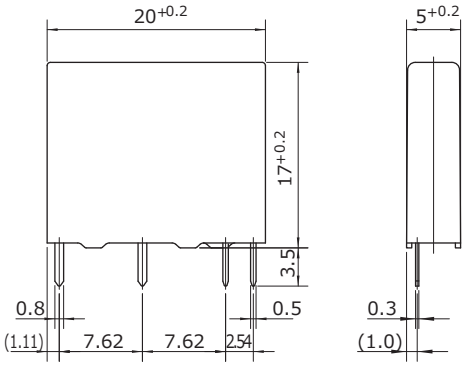

SN-D( )B (DC input module, with buffer)

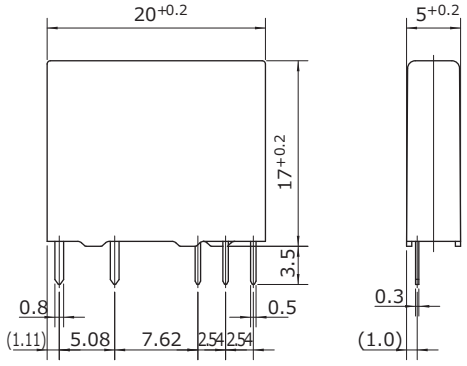

SN-( )A (AC output module, PCB mounting mounting type)

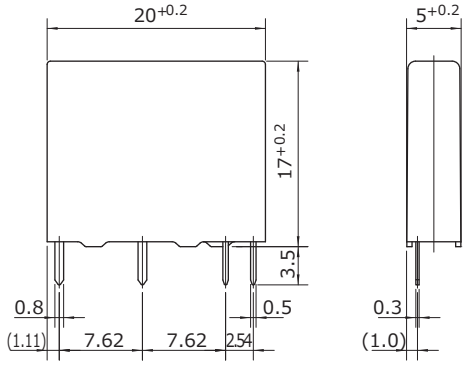

● Schematics (BOTTOM VIEW)

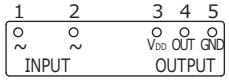

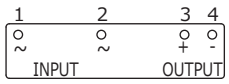

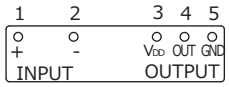

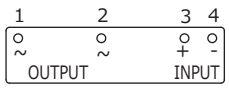

● PC board mounting hole layout (BOTTOM VIEW)

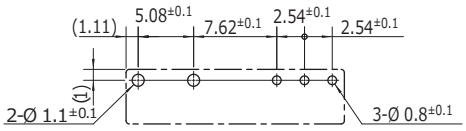

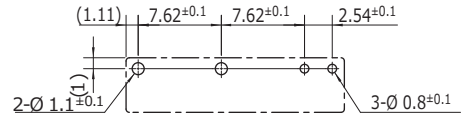

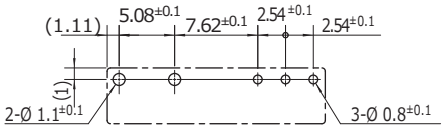

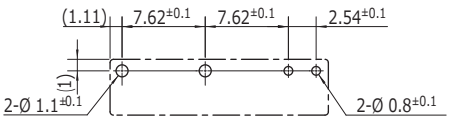

Dimensions of the terminals do not include thickness of pre-soldering.

( ) : Rererence
Unit: mm

■ DIMENSIONS

● Dimensions ● Schematics (BOTTOM VIEW) ● PC board mounting hole layout (BOTTOM VIEW)

SN-( )A-S (AC output module, socket mounting type)

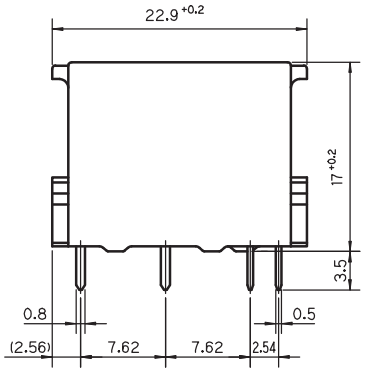

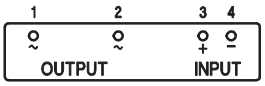

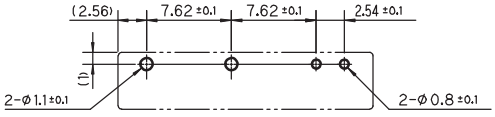

SN-( )D (DC output module, PCB mounting type)

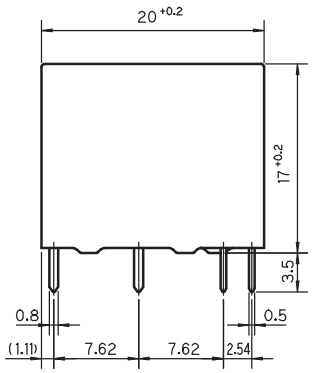

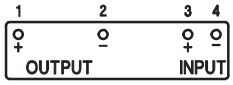

Reverse polarity type available.

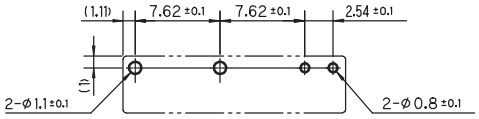

SN-( )D-S (DC output module, socket mounting type)

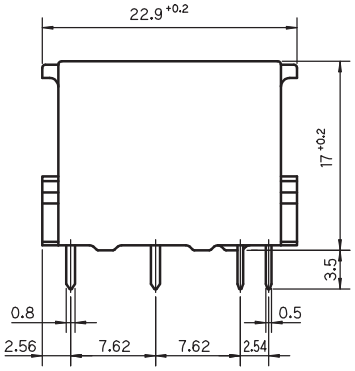

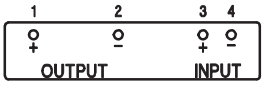

Reverse polarity type available.

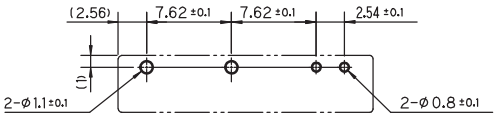

●Socket (Part number: JL-5N)

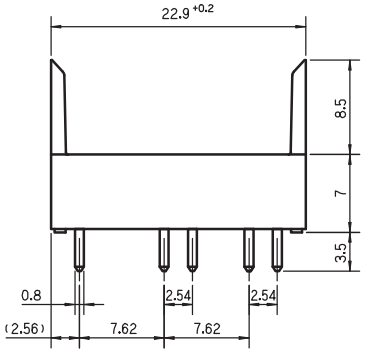

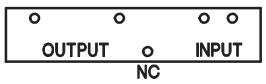

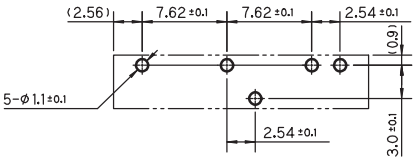

( ): Reference
Unit: mm

Dimensions of the terminals do not include thickness of pre-soldering.

■ CHARACTERISTIC DATA

(Characteristic data is not guaranteed value but measured values of samples from production line.)

● OUTPUT MODULE

Ambient temperature vs max. load current

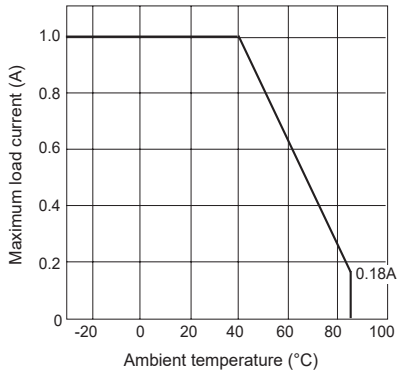

● INPUT MODULE

Distribution of Operate & Release voltage (AC type)

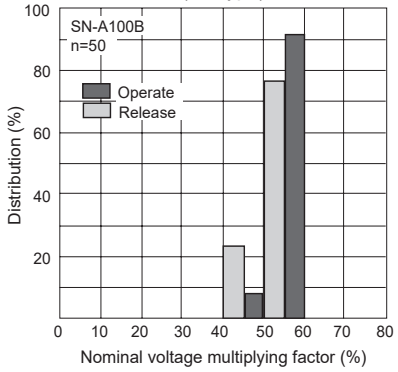

High temperature switching test (AC type)

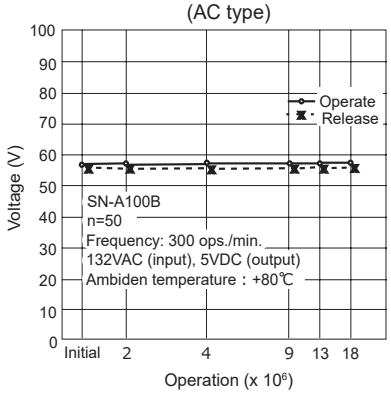

High temperature continuous operating test (AC type)

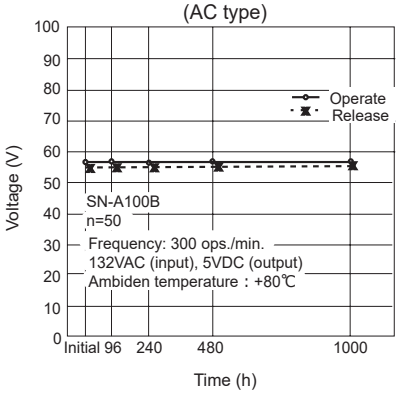

● OUTPUT MODULE

Distribution of operate & release voltage (AC type)

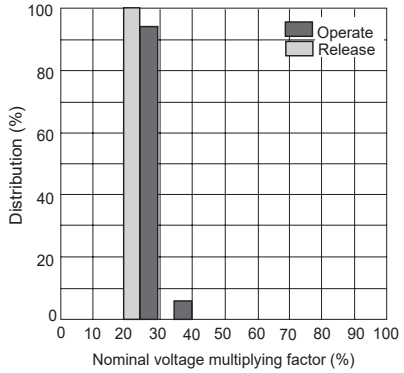

Distribution of operate & relase voltage (DC type)

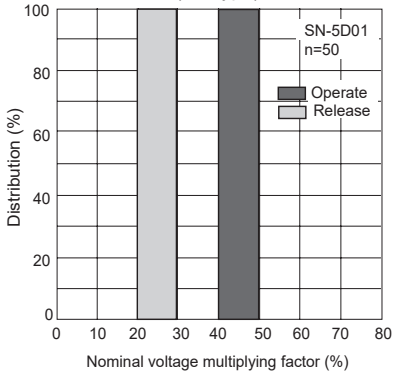

Distribution of ON-state voltage drop (AC type)

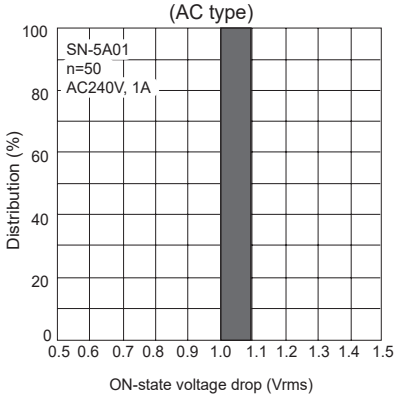

■ PART NUMBER LIST

● Input Module

Part Number	Input Voltage	Output	Enclosure	Note
SN-A( )	AC	Without buffer	Washable	-
SN-A( )B		With buffer		100VAC only
SN-A( )BF		Without buffer	Flux free	-
SN-D( )B	DC	With buffer	Washable	-

● Output Module

Part Number	Load Voltage	Load Current	Kinds of Inverse Connectin Protecting Element	Zero Cross Function	Output Polarity	Switching Speed	Mounting	Note
SN-( )A01F	AC	1.0A	With varistor	Absence	-	-	PCB	-
SN-( )A01C				Presence				
SN-( )A01NVF			Without varistor	Absence				
SN-( )A01NVC				Presence				
SN-( )A01F-S			With varistor	Absence			Socket	Socket part number:JL-5N
SN-( )A01C-S				Presence				
SN-( )A01NVF-S			Without varistor	Absence				
SN-( )A01NVC-S				Presence				
SN-( )D01	DC	1.0A	Diode	-	Standard polarity	Standard	PCB	Input voltage 3VDC is not available
SN-( )D01T						High speed		
SN-( )D01R					Reverse polarity	Standard		
SN-( )D01RT						High speed		
SN-( )D01HZ			Zener diode	-	Standard polarity	Standard		
SN-( )D01HZT						High speed		
SN-( )D01HZR					Reverse polarity	Standard		
SN-( )D01HZRT						High speed		
SN-( )D01-S			Diode	-	Standard polarity	Standard	Socket	Socket part number: JL-5N Input voltage 3VDC is not available
SN-( )D01T-S						High speed		
SN-( )D01R-S					Reverse polarity	Standard		
SN-( )D01RT-S						High speed		
SN-( )D01HZ-S			Zener diode	-	Standard polarity	Standard		
SN-( )D01HZT-S						High speed		
SN-( )D01HZR-S					Reverse polarity	Standard		
SN-( )D01HZRT-S						High speed		

■ NOTES

1. Polarity of terminals is pre-determined. Please design your circuit accordingly.
2. Socket ordering code: JL-5N
3. Standard IC socket is not recommended. Please use socket “JL-5N”.
4. When switching inductive load by AC output module without varistor, please connect a varistor as shown in drawing below.
5. AC input module has inside logic IC. Please connect bypass condenser (approx. 0.01μ) at pivotal points between VDD and GND. (Conform to general handling instructions for logic IC.)

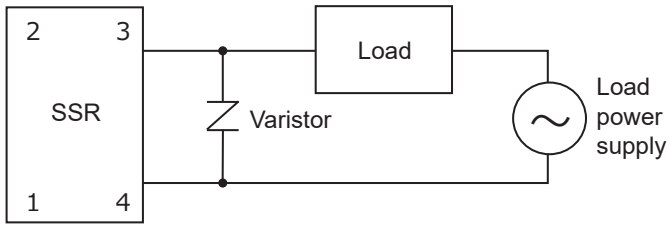

CAUTIONS

- All values mentioned in this datasheet are provided under ideal conditions. Please perform the confirmation test before actual use.
- Reflow soldering is prohibited.
- Do not use relays in the atmosphere with sulfide gas, chloride gas or nitric oxide. Contact resistance may increase.
- Do not use silicon or silicon-containing product or materials near relays. It may cause contact failure.

GENERAL INFORMATION

1. **ROHS Compliance**
   - All relays produced by FCL Components are compliant with RoHS directive 2011/65/EU, including commission delegated directive 2015/863.

2. **Recommended lead free solder condition**
   - Lead free solder plating on relay terminals is Sn-3.0Ag-0.5Cu, unless otherwise specified. This material has been verified to be compatible with PbSn assembly process.
   - Recommended solder for assembly: Sn-3.0Ag-0.5Cu.

Flow Solder Condition:

Pre-Heating:	Maximum 120˚C within 90 sec.
Soldering:	Dip within 5 sec. at 255°C±5°C solder bath

Relay must be cooled by air immediately after soldering

Solder by Soldering Iron:

Soldering Iron:	30-60W
Temperature:	Maximum 340-360˚C
Duration:	Maximum 3 sec.

We highly recommend that you confirm your actual solder conditions

3. **Moisture Sensitivity**
   - Moisture Sensitivity Level standard is not applicable to electromechanical relays, unless otherwise indicated.

4. **Tin Whiskers**
   - Dipped SnAgCu solder is known as presenting a low risk to tin whisker development. No considerable length whisker was found by our in house test.

Contact

Japan
FCL COMPONENTS LIMITED
Shinagawa Seaside Park Tower
12-4, Higashi-shinagawa 4-chome,
Tokyo 140 0002, Japan
Tel: +81-3-3450-1682
Email: fcl-contact@cs.fcl-components.com

North and South America
FCL COMPONENTS AMERICA, INC.
2055 Gateway Place Suite 480,
San Jose, CA 95110 USA
Tel: +1-408-745-4900
Email: contact@fcl-components.us

Europe
FCL COMPONENTS EUROPE B.V.
Diamantlaan 25
2132 WV Hoofddorp, Netherlands
Tel: +31-23-556-0910
Email: info@fcl-components.eu

Asia Pacific
FCL COMPONENTS ASIA PTE LTD.
No. 20 Harbour Drive, #07-01B
Singapore 117612
Tel: +65-6375-8560
Email: fcal@fcl-components.com

China
FCL COMPONENTS (SHANGHAI) CO.,LTD.
Unit 1105, Central Park - Jing An,
No.329 Heng Feng Road, Shanghai
200070, China
Tel: +86-21-3253 0998
Email: fcsh@fcl-components.com

Hong Kong
FCL COMPONENTS HONG KONG CO., LIMITED
Unit 2313, Seapower Tower, Concordia Plaza, No.1 Science Museum Road,
TST, Kowloon, Hong Kong
Tel: +852-2881-8495
Email: fcal@fcl-components.com

Web: www.fcl-components.com/en/

© 2025 FCL Components Limited. All rights reserved. All trademarks or registered trademarks are the property of their respective owners.

FCL Components Products are intended for general use, including without limitation, in personal, household and office environments, in buildings and for ordinary use in the industry. FCL Components Products are not intended to be used in applications where extremely high safety is required (”High Safety Required Applications”), such as, but not limited to, applications in nuclear facilities, in aircraft automatic flight control, in air traffic control, in mass transit system control, in missile launch system, in weapon systems, in medical equipment for life support or any application involving a direct serious risk of physical injury or death.
Please do not use FCL Components Products without securing the sufficient safety and reliability required for the High Safety Required Applications.
In addition, FCL Components shall not be liable against the customer and/or any third party for any claims or damages arising in connection with the use of FCL Components Products in the High Safety Required Applications.
FCL Components warrants that its Products, if properly used and services, will conform to their specification and will be free from defects in material and workmanship for twelve months from delivery.
The implied warranties of merchantability and fitness for a particular purpose and all other warranties, representations and conditions, express or implied by statute, trade usage or otherwise, expect as set forth in this warranty, are excluded and shall not apply to the Products delivered.

The contents, data and information in this datasheet are provided by FCL Components Limited as a service only to its user and only for general information purposes. The use of the contents, data and information provided in this datasheet is at the users’ own risk.
FCL Components has assembled this datasheet with care and will endeavor to keep the contents, data and information correct, accurate, comprehensive, complete and up to date.
FCL Components Limited and affiliated companies do however not accept any responsibility or liability on their behalf, nor on behalf of its employees, for any loss or damage, direct, indirect or consequential, with respect to this datasheet, its contents, data, and information and related graphics and the correctness, reliability, accuracy, comprehensiveness, usefulness, availability and completeness thereof. Nor do FCL Components Limited and affiliated companies accept on their behalf, nor on behalf of its employees, any responsibility or liability with respect to these datasheets, its contents, data, information and related graphics and the correctness, reliability, accuracy, comprehensiveness, usefulness, availability and completeness thereof. Rev. January 21, 2025.