Floyd Bell Inc
SOUND SOLUTIONS

AudioLarm II Series
XB-09-630-Q(S)



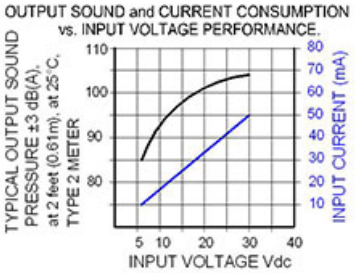

More Information

UL Recognized

RoHS Rohs Compliant

Specifications

Mounting	Panel Mount
Operating Mode	Extra Loud Slow Beep Tone
Operating Voltage	6-30 Vdc
Operating Frequency	2900±250 Hz
Typical Operating Current	10 mA at 6 Vdc 50 mA at 30 Vdc
Typical Sound Pressure	85 ±5 dB(A) at 6 Vdc at 24 inches (61 cm), at 25°C 103 ±5 dB(A) at 30 Vdc at 24 inches (61 cm), at 25°C
Termination	Quick Connect Blades
Termination Strength	Pull test with a maximum of 22 pounds (10 kg) load
Operating Temperature	-20_C to +65_C
Storage Temperature	-40_C to +85_C
Surge Voltage	20% over maximum rated voltage for less than 5 minutes
Reverse Voltage Protection	To the maximum operating voltage
Construction Materials	Case- Plastic _NORYL_ N-190, Flame Retardant UL 94-VO, Black Internal Circuit- Audio-oscillator and piezoelectric driver Potting- 2 parts epoxy resin or silicone, black Diaphragm- Stainless Steel 304
Gasket	Gasket (sold separately) 0.062" thick, 60 Durometer Neoprene
Construction Materials	ASTM B117 Certified - Withstands exposure to salt spray for 300 hours IP 68 Certified - Withstands water submergence and dust exposure Humidity- 95% relative humidity at +40_C continuously for 100 hours. Vibration- Withstands vibration between 0 and 55 Hz. on all axes.
Life Expectancy	10 years under normal operating conditions.
Warranty	For a period of two years from the date of manufacture under normal operating conditions.
Notes	This product is not intended as a life safety device.
Terms and Conditions of Sale	Link here

Dimensions

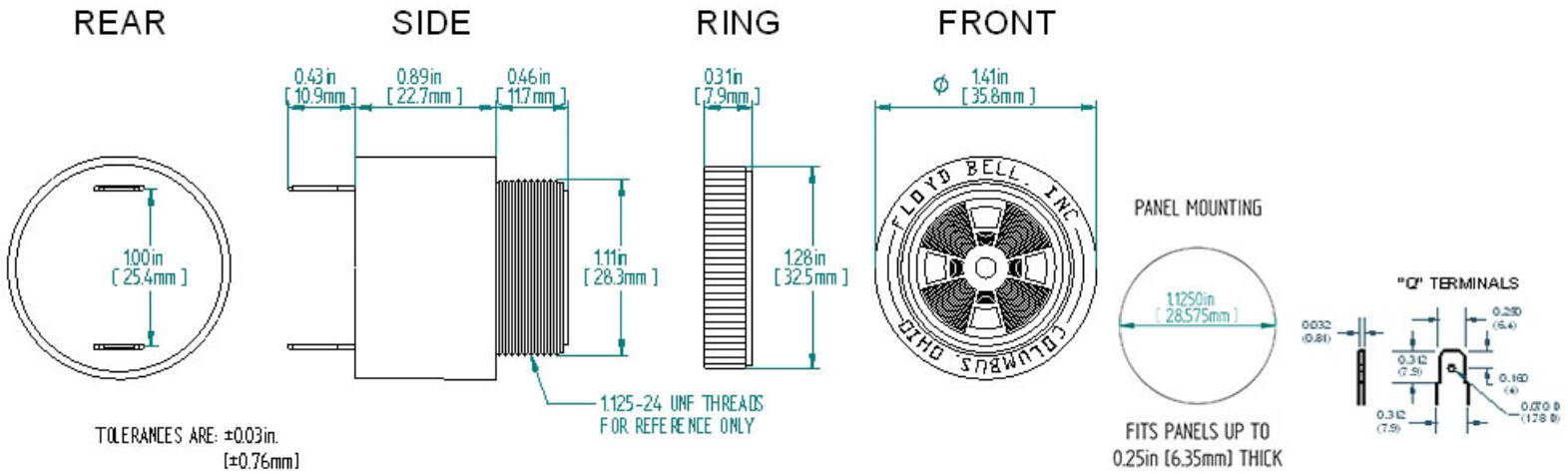
REAR
SIDE
RING
FRONT
1.00 in
[25.4mm]
0.43 in
[10.9mm]
0.89 in
[22.7mm]
0.46 in
[11.7mm]
1.11 in
[28.3mm]
1.125-24 UNF THREADS
FOR REFERENCE ONLY
0.31 in
[7.9mm]
1.28 in
[32.5mm]
ϕ 1.41 in
[35.8mm]
FLOYD BELL INC
COLUMBUS OHIO
TOLERANCES ARE: ±0.03 in.
[±0.76mm]
PANEL MOUNTING
1.1250 in
[28.575mm]
FITS PANELS UP TO
0.25 in [6.35mm] THICK
"Q" TERMINALS
0.032
(0.81)
0.250
(6.4)
0.312
(7.9)
0.160
(4)
0.312
(7.9)