Floyd Bell Inc
SOUND SOLUTIONS

AudioLarm II Series
XB-V09-312-S(F)



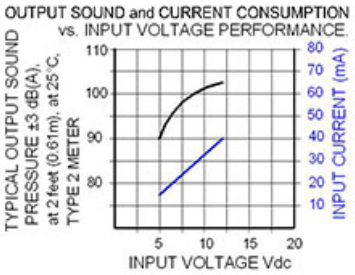


More Information

UL Recognized

RoHS Rohs Compliant

## Specifications

| | |
|---|---|
| **Mounting** | Panel Mount with Volume Control |
| **Operating Mode** | Extra Loud Fast Beep Tone |
| **Operating Voltage** | 5-12 Vdc |
| **Operating Frequency** | 2900±250 Hz |
| **Typical Operating Current** | 15 mA at 5 Vdc<br>40 mA at 12 Vdc |
| **Typical Sound Pressure** | 90 ±5 dB(A) at 5 Vdc at 24 inches (61 cm), at 25°C<br>103 ±5 dB(A) at 12 Vdc at 24 inches (61 cm), at 25°C |
| **Termination** | Quick Connect Blades with Screws |
| **Termination Strength** | Pull test with a maximum of 22 pounds (10 kg) load |
| **Operating Temperature** | -20_C to +65_C |
| **Storage Temperature** | -40_C to +85_C |
| **Surge Voltage** | 20% over maximum rated voltage for less than 5 minutes |
| **Reverse Voltage Protection** | To the maximum operating voltage |
| **Construction Materials** | Case- Plastic _NORYL_ N-190, Flame Retardant UL 94-VO, Black<br>Internal Circuit- Audio-oscillator and piezoelectric driver<br>Potting- 2 parts epoxy resin or silicone, black<br>Diaphragm- Stainless Steel 304 |
| **Gasket** | Gasket (sold separately) 0.062" thick, 60 Durometer Neoprene |
| **Construction Materials** | ASTM B117 Certified - Withstands exposure to salt spray for 300 hours<br>IP 68 Certified - Withstands water submergence and dust exposure<br>Humidity- 95% relative humidity at +40_C continuously for 100 hours.<br>Vibration- Withstands vibration between 0 and 55 Hz. on all axes. |
| **Life Expectancy** | 10 years under normal operating conditions. |
| **Warranty** | For a period of two years from the date of manufacture under normal operating conditions. |
| **Notes** | This product is not intended as a life safety device. |
| **Terms and Conditions of Sale** | Link here |

**Dimensions**

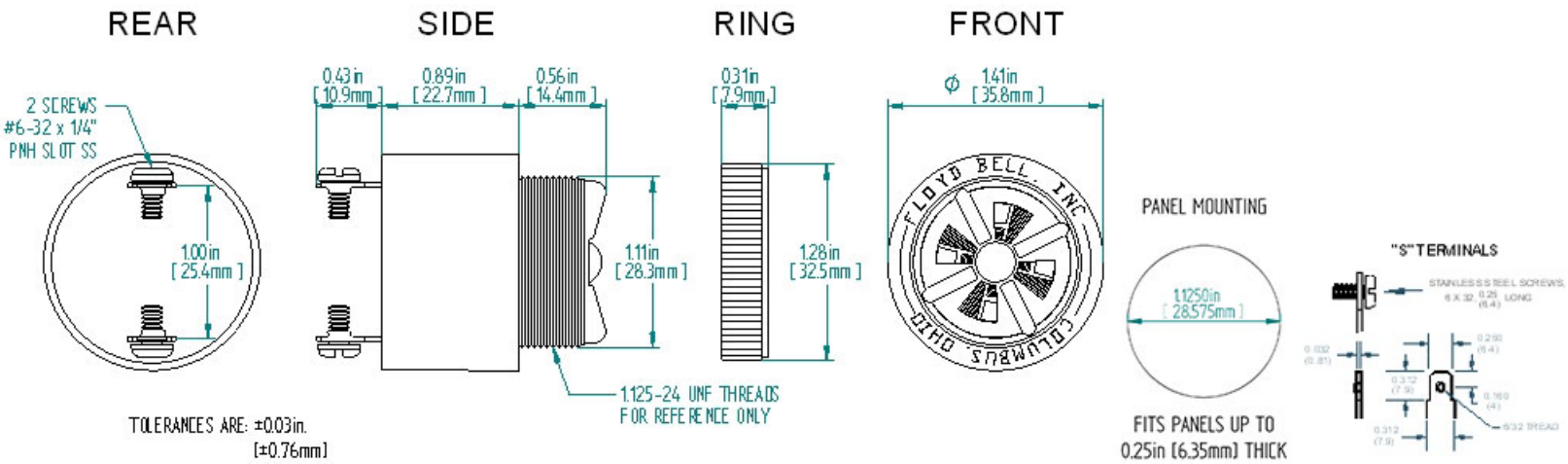
REAR
SIDE
RING
FRONT
2 SCREWS
#6-32 x 1/4"
PNH SLOT SS
1.00in
[25.4mm]
0.43in
[10.9mm]
0.89in
[22.7mm]
0.56in
[14.4mm]
1.11in
[28.3mm]
1.125-24 UNF THREADS
FOR REFERENCE ONLY
0.31in
[7.9mm]
1.28in
[32.5mm]
ϕ 1.41in
[35.8mm]
FLOYD BELL, INC.
COLUMBUS, OHIO
TOLERANCES ARE: ±0.03in.
[±0.76mm]
PANEL MOUNTING
1.1250in
[28.575mm]
FITS PANELS UP TO
0.25in [6.35mm] THICK
"S" TERMINALS