Future Technology Devices International Ltd.

FT2232H-56Q Mini Module

USB Hi-Speed FT2232H Evaluation Module

Datasheet

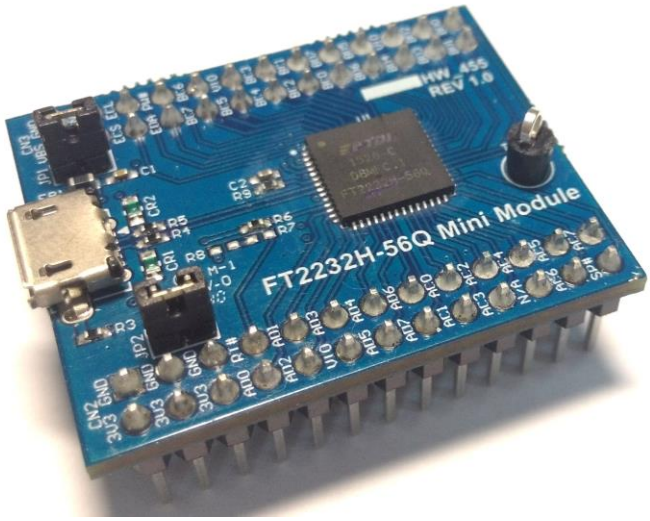

Neither the whole nor any part of the information contained in, or the product described in this manual, may be adapted or reproduced in any material or electronic form without the prior written consent of the copyright holder. This product and its documentation are supplied on an as-is basis and no warranty as to their suitability for any particular purpose is either made or implied. Future Technology Devices International Ltd will not accept any claim for damages howsoever arising as a result of use or failure of this product. Your statutory rights are not affected. This product or any variant of it is not intended for use in any medical appliance, device or system in which the failure of the product might reasonably be expected to result in personal injury. This document provides preliminary information that may be subject to change without notice. No freedom to use patents or other intellectual property rights is implied by the publication of this document. Future Technology Devices International Ltd, Unit 1, 2 Seaward Place, Centurion Business Park, Glasgow, G41 1HH, United Kingdom. Scotland Registered Number: SC136640

1 Introduction

The FT2232H-56Q Mini Module is a USB-serial/FIFO development module in the FTDI product range which utilizes the FT2232H-56Q USB Hi-Speed dual-port bridge chip which handles all the USB signalling and protocols. It is ideal for development purposes to quickly prove functionality of adding USB to a target design. The FT2232H datasheet, is available at http://www.ftdichip.com/Products/ICs/FT2232H.html.

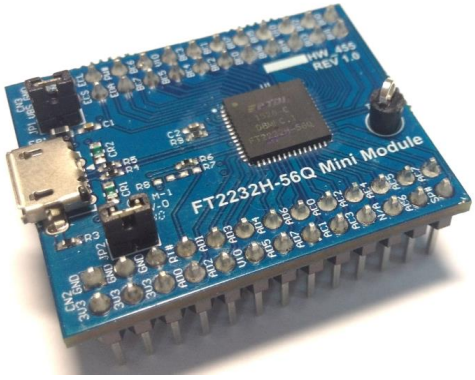

Figure 1.1 FT2232H-56Q Mini Module

The FT2232H-56Q Mini Module is a USB 2.0 High Speed (480Mb/s) to UART/MPSSE IC. The device features two interfaces that can be configured for asynchronous or synchronous serial or parallel FIFO interfaces. The two channels can also be independently configured to use an MPSSE engine. This allows the two ports of the FT2232H-56Q to operate independently as UART/Bit-Bang ports or MPSSE engines used to emulate JTAG, SPI, I^2C, Bit-bang or other synchronous serial modes. All components used, including the FT2232H-56Q are Pb-free (RoHS compliant).

The FT2232H-56Q Mini Module connects the signals of the FT2232H-56Q IC to two 26-pin dual-row headers which allow easy connection PCB header sockets and ribbon cables.

The FT2232H-56Q Mini Module requires USB device drivers, available free from http://www.ftdichip.com, which are used to make the FT2232H-56Q on the Mini Module appear as two virtual COM ports (VCP). This then allows the user to communicate with the USB interface via a standard PC serial emulation port (TTY). Another FTDI USB driver, the D2XX driver, can also be used with application software to directly access the FT2232H-56Q on the Mini Module through a DLL. This is illustrated in **Figure 1.2**.

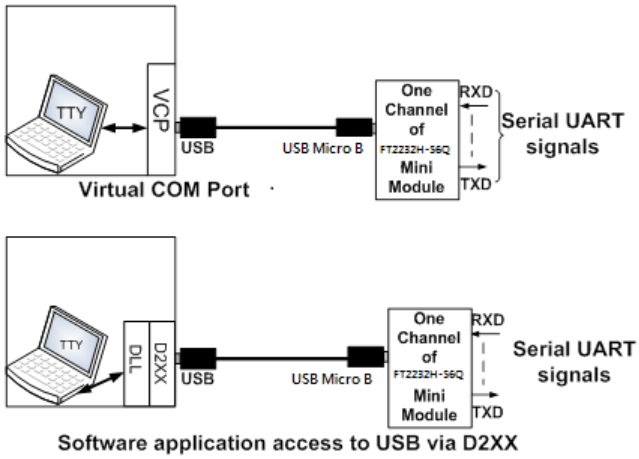

Figure 1.2 Using the FT2232H-56Q Mini Module

Device Drivers for the FT2232H-56Q Mini Module are available free from http://www.ftdichip.com.

Copyright © Future Technology Devices International Limited

1.1 USB Compliant

The FT2232H-56Q Mini Modules are fully compliant with the USB 2.0 specification.



Copyright © Future Technology Devices International Limited

Table of Contents

1 Introduction 1
1.1 USB Compliant 2
2 Typical Applications 4
2.1 Driver Support 4
2.2 Features 4
3 Electrical Details 5
4 Mechanical details 7
5 Schematic Diagram 8
6 Contact Information 9
Appendix A – References 13
Document References 13
Acronyms and Abbreviations 13
Appendix B –List Table and List Figures 14
List of Tables 14
List of Figures 14
Appendix C – FT2232H EEPROM Configuration 15
Appendix D – Revision History 16

Copyright © Future Technology Devices International Limited

2 Typical Applications

- Rapid USB integration into existing electronic systems.
- Prototyping platform for USB interface on new systems.
- USB to multi-port JTAG, SPI and I^2C interfaces (Two Multi-Protocol Synchronous Serial Engines –MPSSE – available with the FT2232H)
- USB to multi-port asynchronous serial interfaces (up to 2 ports available).

2.1 Driver Support

Royalty free VIRTUAL COM PORT (VCP) DRIVERS for…

- Windows 10 32,64-bit
- Windows 8/8.1 32,64-bit
- Windows 7 32,64-bit
- Windows Vista and Vista 64-bit
- Windows XP and XP 64-bit
- Windows 98, 98SE, ME, 2000, Server 2003, XP, Server 2008 and server 2012 R2
- Windows XP Embedded
- Windows CE 4.2, 5.0 and 6.0
- Mac OS 8/9, OS-X
- Linux 2.4 and greater

Royalty free D2XX *Direct* Drivers (USB Drivers + DLL S/W Interface)

- Windows 10 32,64-bit
- Windows 8/8.1 32,64-bit
- Windows 7 32,64-bit
- Windows Vista and Vista 64-bit
- Windows XP and XP 64-bit
- Windows 98, 98SE, ME, 2000, Server 2003, XP, Server 2008 and server 2012 R2
- Windows XP Embedded
- Windows CE 4.2, 5.0 and 6.0
- Linux 2.4 and greater
- Android(J2xx)

The drivers listed above are all available to download for free from www.ftdichip.com.

2.2 Features

The FT2232H-56Q Mini Module has the following feature:

- USB 2.0 Hi-Speed compatible
- Reduced development time
- Rapid integration into existing systems
- USB powered – no external power supply needed
- Based on the USB Hi-Speed FT2232H device
- Entire USB protocol handled by USB module
- Small USB Micro B connector common on many commercial devices
- Asynchronous Serial data transfer rates from 300 baud to 12 Mbaud at TTL levels
- Synchronous Serial (MPSSE) data rates of up to 30Mbps on JTAG, SPI and I^2C
- Support for USB suspend and resume
- UHCI / OHCI / EHCI host controller compatible
- -40°C to +85°C operating temperature range
- On board jumper for FT2232H-56Q configuration mode, USB power configuration and VIO source selection
- The FT2232H-56Q is the QFN-56 pin package.

Copyright © Future Technology Devices International Limited

3 Electrical Details

The electrical details and connections to the FT2232H-56Q Mini Module are shown in **Figure 3.1** and **Table 3.1** and **Table 3.2**.

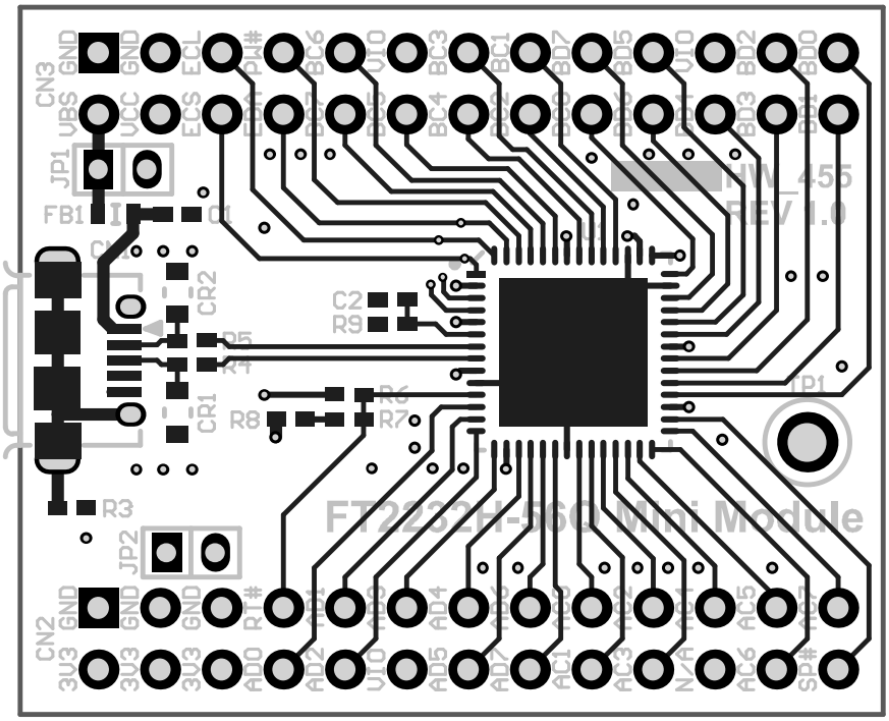

Figure 3.1 FT2232H-56Q Mini Module Electrical Connections (Top View)

Connector Pin	Name	Description
CN2-1	GND	0V Power pin
CN2-2	V3V3	3.3V DC generated from VCC (output)
CN2-3	GND	0V Power pin
CN2-4	V3V3	3.3V DC generated from VCC (output)
CN2-5	GND	0V Power pin
CN2-6	V3V3	3.3V DC generated from VCC (output)
CN2-7	RESET#	FT2232H-56Q RESET# pin
CN2-8	AD0	FT2232H-56Q AD0 pin
CN2-9	AD1	FT2232H-56Q AD1 pin
CN2-10	AD2	FT2232H-56Q AD2 pin
CN2-11	AD3	FT2232H-56Q AD3 pin
CN2-12	VIO	Connected to all FT2232H-56Q VCCIO pins (input)
CN2-13	AD4	FT2232H-56Q AD4 pin
CN2-14	AD5	FT2232H-56Q AD5 pin
CN2-15	AD6	FT2232H-56Q AD6 pin
CN2-16	AD7	FT2232H-56Q AD7 pin
CN2-17	AC0	FT2232H-56Q AC0 pin
CN2-18	AC1	FT2232H-56Q AC1 pin
CN2-19	AC2	FT2232H-56Q AC2 pin
CN2-20	AC3	FT2232H-56Q AC3pin
CN2-21	AC4	FT2232H-56Q AC4 pin
CN2-22	N/A	0
CN2-23	AC5	FT2232H-56Q AC5 pin
CN2-24	AC6	FT2232H-56Q AC6 pin
CN2-25	AC7	FT2232H-56Q AC7 pin
CN2-26	SUSPEND#	FT2232H-56Q SUSPEND# pin

Table 3.1 FT2232H-56Q Mini Module Connection – CN2

Copyright © Future Technology Devices International Limited

Connector Pin	Name	Description
CN3-1	GND	0V Power pin
CN3-2	VBUS	USB VBUS power pin (output)
CN3-3	GND	0V Power pin
CN3-4	VCC	+5V Power pin (input) used to generate V3V3, VPLL and VUSB
CN3-5	CLK	FT2232H-56Q EECLK pin
CN3-6	CS	FT2232H-56Q EECS pin
CN3-7	PWREN#	FT2232H-56Q PWREN#
CN3-8	DATA	FT2232H-56Q EEDATA pin
CN3-9	BC6	FT2232H-56Q BC6 pin
CN3-10	BC7	FT2232H-56Q BC7 pin
CN3-11	VIO	Connected to all FT2232H-56Q VCCIO pins (input)
CN3-12	BC5	FT2232H-56Q BC5 pin
CN3-13	BC3	FT2232H-56Q BC3 pin
CN3-14	BC4	FT2232H-56Q BC4 pin
CN3-15	BC1	FT2232H-56Q BC1 pin
CN3-16	BC2	FT2232H-56Q BC2 pin
CN3-17	BD7	FT2232H-56Q BD7 pin
CN3-18	BC0	FT2232H-56Q BC0 pin
CN3-19	BD5	FT2232H-56Q BD5 pin
CN3-20	BD6	FT2232H-56Q BD6 pin
CN3-21	VIO	Connected to all FT2232H-56Q VCCIO pins (input)
CN3-22	BD4	FT2232H-56Q BD4 pin
CN3-23	BD2	FT2232H-56Q BD2 pin
CN3-24	BD3	FT2232H-56Q BD3 pin
CN3-25	BD0	FT2232H-56Q BD0 pin
CN3-26	BD1	FT2232H-56Q BD1 pin

Table 3.2 FT2232H-56Q Mini Module Connection – CN3

In most cases, the FT2232H-56Q pin is connected directly to the associated pin on CN2 or CN3. The FT2232H-56Q Mini Module allows configuration with both USB Bus-powered designs and USB Self-powered designs:

USB Bus-powered:

1) **JP1 is connected VBUS to VCC (CN3, pin 2 to CN3, pin 4).** This connection takes the power from the USB bus (VBUS) and connects it to the voltage regulator input on the FT2232H-56Q Mini Module. The voltage regulator, in turn, provides V3V3, VPLL and VUSB power inputs to the FT2232H-56Q chip.
2) **JP2 is connected V3V3 to VIO (CN2, pins 2, 4 & 6 to CN2, pins 12 and CN3, pins 11 & 21).** This connection provides the correct 3.3VDC operating voltage for VCCIO on the FT2232H-56Q chip.
3) Connected to jumper JP1 pin 1 in order to supply power for FT2232H-56Q chip from the USB port.
4) External 3.3V regulator output. Connected to jumper JP2 pin 2 in order to supply the VIO voltage with 3.3V tolerance.

USB Self-Powered:

1) **Remove the JP1 and JP2 jumper.**
2) **Leave VBUS (CN3, pin 2) unconnected.**
3) **Connect an external 5.0VDC power supply to VCC (5.0VDC to CN3, pin 4).** This connection takes power from an external power supply and connects it to the voltage regulator input on the FT2232H-56Q Mini Module. See the FT2232H data sheet for allowable VCC input voltage ranges.
4) **Connect V3V3 to VIO (CN2, pins 2, 4 & 6 to CN2, pins 12 and CN3, pins 11 & 21).** This connection provides the correct 3.3VDC operating voltage for VCCIO on the FT2232H-56Q chip.
5) **Use FT_Prog to change the USB power descriptor to "Self-Powered".** This setting indicates to the host system that the USB Host port does not need to supply power to the device. FT_PROG is a utility provided by FTDI to program various features of the FT-series USB client ICs. FT_PROG is available through the Utilities section of the FTDI web site.

Copyright © Future Technology Devices International Limited

4 Mechanical details

The mechanical details of the FT2232H-56Q Mini Module are shown in Figure 4.1:

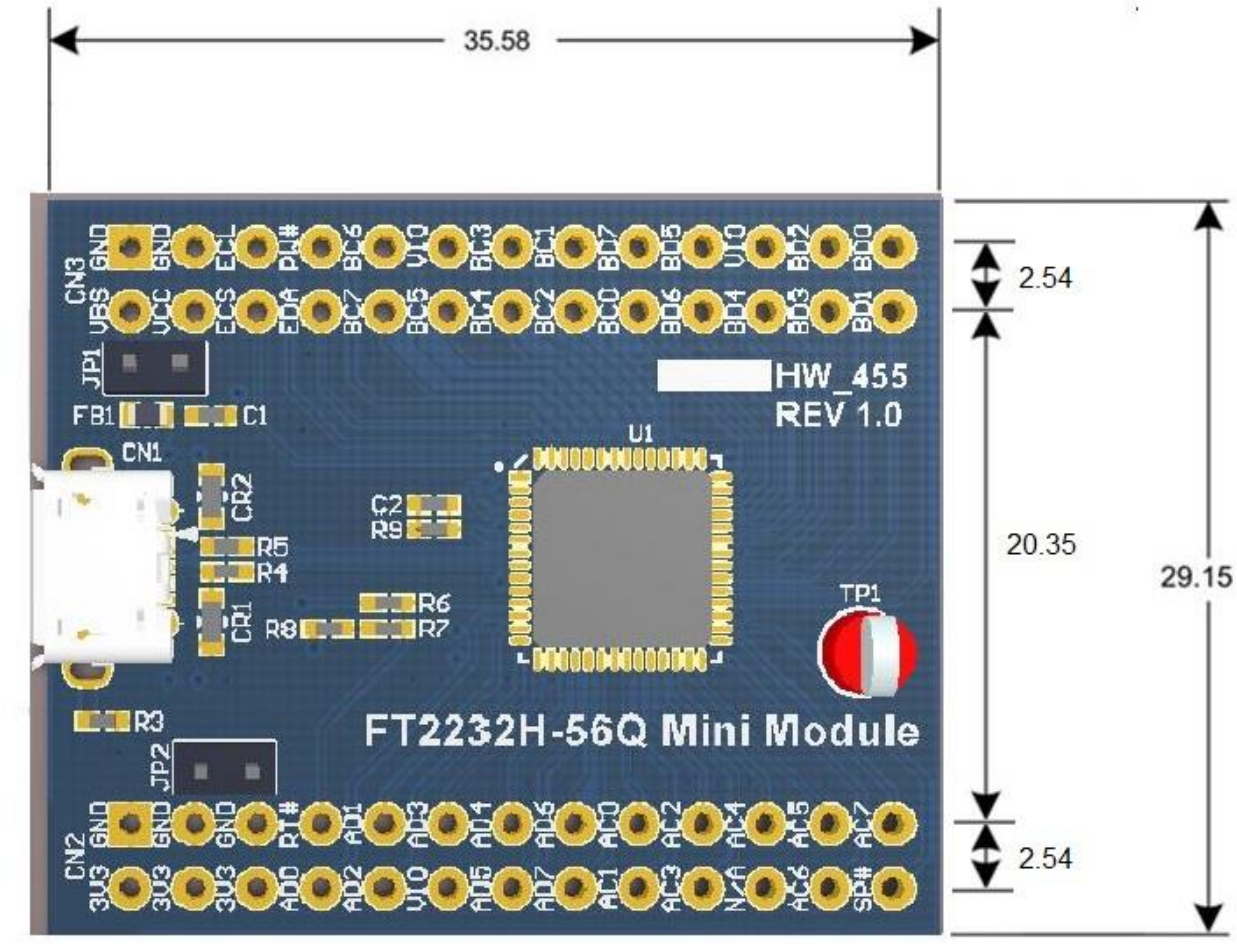

Figure 4.1 FT2232H-56Q Mini Module Dimensions

All dimensions are in millimetres.

The headers CN2 and CN3 are mounted to the bottom of the PCB. The overall height below the PCB is 8.5mm, with a body which exposes 6.0mm of the pins. The pins are 0.025 inch square.

The Micro-B USB connector has a height of 2.8mm.

Copyright © Future Technology Devices International Limited

5 Schematic Diagram

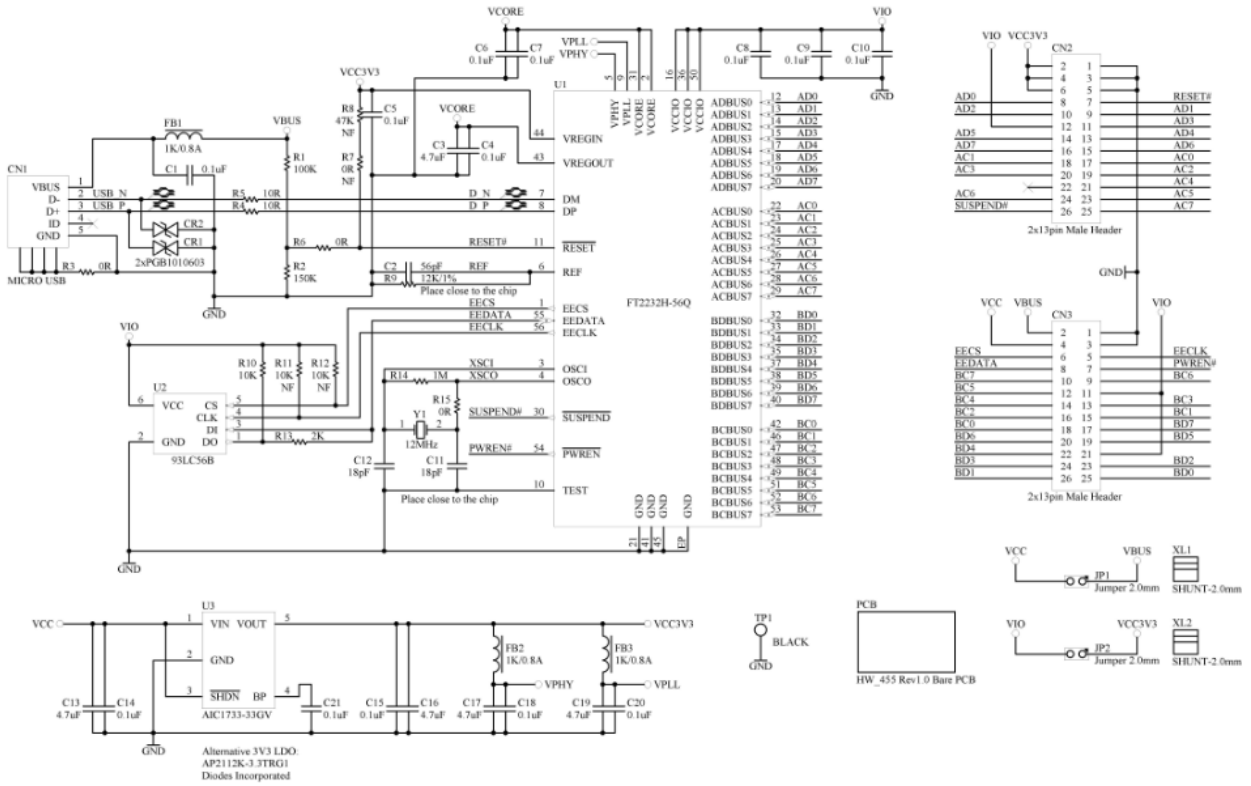

Figure 5.1 FT2232H-56Q Mini Module Schematic

6 Contact Information

Head Office – Glasgow, UK

Future Technology Devices International Limited
Unit 1, 2 Seaward Place, Centurion Business Park
Glasgow G41 1HH
United Kingdom
Tel: +44 (0) 141 429 2777
Fax: +44 (0) 141 429 2758

E-mail (Sales) sales1@ftdichip.com
E-mail (Support) support1@ftdichip.com
E-mail (General Enquiries) admin1@ftdichip.com

Branch Office – Taipei, Taiwan

Future Technology Devices International Limited (Taiwan)
2F, No. 516, Sec. 1, NeiHu Road
Taipei 114
Taiwan, R.O.C.
Tel: +886 (0) 2 8797 1330
Fax: +886 (0) 2 8751 9737

E-mail (Sales) asia.sales1@ftdichip.com
E-mail (Support) asia.support1@ftdichip.com
E-mail (General Enquiries) asia.admin1@ftdichip.com

Branch Office – Hillsboro, Oregon, USA

Future Technology Devices International Limited (USA)
7235 NW Evergreen Parkway, Suite 600
Hillsboro, OR 97123-5803
USA
Tel: +1 (503) 547 0988
Fax: +1 (503) 547 0987

E-Mail (Sales) us.sales@ftdichip.com
E-Mail (Support) us.support@ftdichip.com
E-Mail (General Enquiries) us.admin@ftdichip.com

Branch Office – Shanghai, China

Future Technology Devices International Limited (China)
Room 1103, No. 666,
West Huaihai Road,
Shanghai, 200052
China
Tel: +86 21 62351596
Fax: +86 21 62351595

E-mail (Sales) cn.sales@ftdichip.com
E-mail (Support) cn.support@ftdichip.com
E-mail (General Enquiries) cn.admin@ftdichip.com

Web Site

http://ftdichip.com

Distributor and Sales Representatives

Please visit the Sales Network page of the FTDI Web site for the contact details of our distributor(s) and sales representative(s) in your country.

System and equipment manufacturers and designers are responsible to ensure that their systems, and any Future Technology Devices International Ltd (FTDI) devices incorporated in their systems, meet all applicable safety, regulatory and system-level performance requirements. All application-related information in this document (including application descriptions, suggested FTDI devices and other materials) is provided for reference only. While FTDI has taken care to assure it is accurate, this information is subject to customer confirmation, and FTDI disclaims all liability for system designs and for any applications assistance provided by FTDI. Use of FTDI devices in life support and/or safety applications is entirely at the user's risk, and the user agrees to defend, indemnify and hold harmless FTDI from any and all damages, claims, suits or expense resulting from such use. This document is subject to change without notice. No freedom to use patents or other intellectual property rights is implied by the publication of this document. Neither the whole nor any part of the information contained in, or the product described in this document, may be adapted or reproduced in any material or electronic form without the prior written consent of the copyright holder. Future Technology Devices International Ltd, Unit 1, 2 Seaward Place, Centurion Business Park, Glasgow G41 1HH, United Kingdom. Scotland Registered Company Number: SC136640

Appendix A – References

Document References

FT_PROG Utility

http://www.ftdichip.com/Support/Utilities.htm#FT_Prog

Acronyms and Abbreviations

Terms	Description
DLL	Dynamic Link Library
EEPROM	Electrically Erasable Programmable Read Only Memory
EHCI	Extensible Host Controller Interface
FIFO	First In First Out
IC	Integrated Circuit
I2C	Inter-Integrated Circuit
JTAG	Joint Test Action Group
MPSSE	Multi-Protocol Synchronous Serial Engines
OHCI	Open Host Controller Interface
PCB	Printed Circuit Board
RoHS	Restriction of Hazardous Substances Directive
SPI	Serial Peripheral Interface
UART	Universal Asynchronous Receiver/Transmitter
UHCI	Universal Host Controller Interface
USB	Universal Serial Bus
VBUS	Virtual BUS
VCC	Voltage at the Common Collector
VCP	Virtual COM Ports

Copyright © Future Technology Devices International Limited

Appendix B –List Table and List Figures

List of Tables

Figure 1.1 FT2232H-56Q Mini Module 1
Figure 1.2 Using the FT2232H-56Q Mini Module 1
Figure 3.1 FT2232H-56Q Mini Module Electrical Connections (Top View) 5
Figure 4.1 FT2232H-56Q Mini Module Dimensions 7
Figure 5.1 FT2232H-56Q Mini Module Schematic 8

List of Figures

Figure 1.1 FT2232H-56Q Mini Module 1
Figure 1.2 Using the FT2232H-56Q Mini Module 1
Figure 3.1 FT2232H-56Q Mini Module Electrical Connections (Top View) 5
Figure 4.1 FT2232H-56Q Mini Module Dimensions 7
Figure 5.1 FT2232H-56Q Mini Module Schematic 8

Copyright © Future Technology Devices International Limited

Appendix C – FT2232H EEPROM Configuration

The FT2232H-56Q Mini Module utilizes an EEPROM which contains the USB configuration descriptors for the FT2232H-56Q. When the Mini Module is plugged into a PC or a USB reset is performed, the PC will read these descriptors. The default values stored into the EEPROM are defined in Table 6.1.

Parameter	Value	Notes
USB Vendor ID (VID)	0403h	FTDI default VID (hex)
USB Product UD (PID)	6010h	FTDI default PID (hex)
Serial Number Enabled?	Yes	
Serial Number	See Note	A unique serial number is generated and programmed into the EEPROM during device final test.
Pull down I/O Pins in USB Suspend	Disabled	Enabling this option will make the device pull down on the UART interface lines when the power is shut off (PWREN# is high).
Manufacturer Name	FTDI	
Product Description	FT2232H-56Q Mini Module	
Max Bus Power Current	500mA	
Power Source	Bus Powered	
Device Type	FT2232H	
USB Version	0200	Returns USB 2.0 device description to the host. Note: The device is being a USB 2.0 Full Speed device (12Mb/s) as opposed to a USB 2.0 High Speed device (480Mb/s).
Remote Wake Up	Enabled	Taking RI# low will wake up the USB host controller from suspend.
High Current I/Os	Enabled	Enables the high drive level on the UART and CBUS I/O pins.
Load VCP Driver	Disabled	Makes the device load the VCP driver interface for the device.

Table 6.1 Default Internal EEPROM Configuration

The EEPROM on the FT2232H-56Q Mini Module can be re-programmed over USB using the utility program FT_PROG. FT_PROG can be downloaded from http://www.ftdichip.com/Support/Utilities.htm#FT_PROG. Users who do not have their own USB Vendor ID but who would like to use a unique Product ID in their design can apply to FTDI for a free block of unique PIDs. Contact FTDI support for this service.

Copyright © Future Technology Devices International Limited

Appendix D – Revision History

Document Title: FT2232H-56Q Mini Module Datasheet
Document Reference No.: FT_001274
Clearance No.: FTDI# 490
Product Page: http://www.ftdichip.com/Products/
Document Feedback: Send Feedback

Revision	Changes	Date
1.0	Initial Release	15-03-2016
1.1	Updated tables 3.1 and 3.2. Added additional measurements to table 4.1.	08-05-2018
1.2	Updated Table 3.2 CN3 label.	24-01-2019
1.3	Updated Figure 5.1	16-01-2020
1.4	Changed to pin numbers on page 7-8.	04-07-2020

Copyright © Future Technology Devices International Limited