Future Technology Devices International Ltd

FT4232H Quad High Speed USB to Multipurpose UART/MPSSE IC



The FT4232H is FTDI's 5th generation of USB devices. The FT4232H is a USB 2.0 High Speed (480Mb/s) to UART/MPSSE ICs. The device features 4 UARTs. Two of these have an option to independently configure an MPSSE engine. This allows the FT4232H to operate as two UART/Bit-Bang ports plus two MPSSE engines used to emulate JTAG, SPI, I²C, Bit-bang or other synchronous serial modes. The FT4232H has the following advanced features:

- Single chip USB to quad serial ports with a variety of configurations.
- Entire USB protocol handled on the chip. No USB specific firmware programming required.
- USB 2.0 High Speed (480Mbits/Second) and Full Speed (12Mbits/Second) compatible.
- Two Multi-Protocol Synchronous Serial Engine (MPSSE) on channel A and channel B, to simplify synchronous serial protocol (USB to JTAG, I²C, SPI or bit-bang) design.
- Independent Baud rate generators.
- RS232/RS422/RS485 UART Transfer Data Rate up to 12Mbaud. (RS232 Data Rate limited by external level shifter).
- FTDI's royalty-free Virtual Com Port (VCP) and Direct (D2XX) drivers eliminate the requirement for USB driver development in most cases.
- Optional traffic TX/RX indicators can be added with LEDs and an external 74HC595 shift register.
- Adjustable receive buffer timeout.
- Support for USB suspend and resume conditions via PWREN#, SUSPEND# and RI# pins.
- Highly integrated design includes +1.8V LDO regulator for VCORE, integrated POR function and on chip clock multiplier PLL (12MHz – 480MHz).
- FTDI FT232B style, asynchronous serial UART interface option with full hardware handshaking and modem interface signals.
- Fully assisted hardware or X-On / X-Off software handshaking.
- UART Interface supports 7/8 bit data, 1/2 stop bits, and Odd/Even/Mark/Space/No Parity.
- Auto-transmit enable control for RS485 serial applications using TXDEN pin.
- Operational configuration mode and USB Description strings configurable in external EEPROM over the USB interface.
- Low operating and USB suspend current.
- Configurable I/O drive strength (4, 8, 12 or 16mA) and slew rate.
- Supports bus powered, self-powered and high-power bus powered USB configurations.
- UHCI/OHCI/EHCI host controller compatible.
- USB Bulk data transfer mode (512 byte packets in High Speed mode).
- Dedicated Windows DLLs available for USB to JTAG, USB to SPI, and USB to I²C applications.
- +1.8V (chip core) and +3.3V I/O interfacing (+5V Tolerant).
- Extended -40°C to 85°C industrial operating temperature range.
- Compact 64-LD Lead Free LQFP or QFN package
- Available in compact Pb-free 56 Pin VQFN packages (RoHS compliant)
- +3.3V single supply operating voltage range.
- ESD protection for FT4232H IO's:
  Human Body Model (HBM) ±2kV,
  Machine Mode (MM) ±200V,
  Charge Device Model (CDM) ±500V,

  Latch-up free.

Neither the whole nor any part of the information contained in, or the product described in this manual, may be adapted or reproduced in any material or electronic form without the prior written consent of the copyright holder. This product and its documentation are supplied on an as-is basis and no warranty as to their suitability for any particular purpose is either made or implied. Future Technology Devices International Ltd will not accept any claim for damages howsoever arising as a result of use or failure of this product. Your statutory rights are not affected. This product or any variant of it is not intended for use in any medical appliance, device or system in which the failure of the product might reasonably be expected to result in personal injury. This document provides preliminary information that may be subject to change without notice. No freedom to use patents or other intellectual property rights is implied by the publication of this document. Future Technology Devices International Ltd, Unit 1, 2 Seaward Place, Centurion Business Park, Glasgow, G41 1HH, United Kingdom. Scotland Registered Number: SC136640

1 Typical Applications

- Single chip USB to four channels UART (RS232, RS422 or RS485) or Bit-Bang interfaces.
- Single chip USB to 2 JTAG channels plus 2 UARTS.
- Single chip USB to 1 JTAG channel plus 3 UARTS.
- Single chip USB to 1 SPI channel plus 3 UARTS.
- Single chip USB to 2 SPI channels plus 2 UARTS.
- Single chip USB to 2 Bit-Bang channels plus 2 UARTS.
- Single chip USB to 1 SPI channel, plus 1 JTAG channel plus 2 UARTS.
- Single chip USB to 2 I^2C channels plus 2 UARTS.
- Numerous combinations of 4 channels.
- Upgrading Legacy Peripheral Designs to USB
- Field Upgradable USB Products
- Cellular and cordless phone USB data transfer cables and interfaces.
- Interfacing MCU / PLD / FPGA based designs to USB
- PDA to USB data transfer
- USB Smart Card Readers
- USB Instrumentation
- USB Industrial Control
- USB MP3 Player Interface
- USB FLASH Card Reader / Writers
- Set Top Box PC - USB interface
- USB Digital Camera Interface
- USB Bar Code Readers

1.1 Driver Support

The FT4232H requires USB drivers (listed below), available free from http://www.ftdichip.com, which are used to make the FT4232H appear as a virtual COM port (VCP). This allows the user to communicate with the USB interface via a standard PC serial emulation port (for example TTY). Another FTDI USB driver, the D2XX driver, can also be used with application software to directly access the FT4232H through a DLL.

Royalty free VIRTUAL COM PORT (VCP) DRIVERS for...

- Windows 10 32,64-bit
- Windows 8/8.1 32,64-bit
- Windows 7 32,64-bit
- Windows Vista and Vista 64-bit
- Windows XP and XP 64-bit
- Windows 98, 98SE, ME, 2000, Server 2003, XP, Server 2008 and server 2012 R2
- Windows XP Embedded
- Windows CE 4.2, 5.0 and 6.0
- Mac OS 8/9, OS-X
- Linux 2.4 and greater

Royalty free D2XX *Direct* Drivers (USB Drivers + DLL S/W Interface)

- Windows 10 32,64-bit
- Windows 8/8.1 32,64-bit
- Windows 7 32,64-bit
- Windows Vista and Vista 64-bit
- Windows XP and XP 64-bit
- Windows 98, 98SE, ME, 2000, Server 2003, XP, Server 2008 and server 2012 R2
- Windows XP Embedded
- Windows CE 4.2, 5.0 and 6.0
- Linux 2.4 and greater
- Android(J2xx)

For driver installation, please refer to the installation guides on our website:
http://www.ftdichip.com/Support/Documents/InstallGuides.htm

The following additional installation guides application notes and technical notes are also available:

- AN_113, "Interfacing FT2232H Hi-Speed Devices To I2C Bus".
- AN_109 – "Programming Guide for High Speed FTCI2C DLL"
- AN_110 – "Programming Guide for High Speed FTCJTAG DLL"
- AN_111 – "Programming Guide for High Speed FTCSPI DLL"
- AN 113 – "Interfacing FT2232H Hi-Speed Devices To I2C Bus"
- AN114 – "Interfacing FT2232H Hi-Speed Devices To SPI Bus"
- AN135 – MPSSE Basics
- AN108 - Command Processor For MPSSE and MCU Host Bus Emulation Modes

Copyright © Future Technology Devices International Limited

- TN_104, "Guide to Debugging Customers Failed Driver Installation"

1.2 Part Numbers

Part Number	Package
FT4232HL-XXXX	64 Pin LQFP
FT4232HQ-XXXX	64 Pin QFN
FT4232H-56Q-XXXX	56 Pin VQFN

Note: Packaging codes for xxxx is:

- Reel: Taped and Reel (LQFP =1000 pcs per reel, QFN-64 =4000 pcs per reel, QFN-56 = 3000 pcs per reel)

- Tray: Tray packing, (LQFP =160 pcs per tray, QFN-64 =260 pcs per tray, QFN-56 = 260 pcs per tray)

Please refer to section 8 for all package mechanical parameters.

1.3 USB Compliant

The FT4232H is fully compliant with the USB 2.0 specification and has been given the USB-IF Test-ID (TID) 40720024.

The timing of the rise/fall time of the USB signals is not only dependant on the USB signal drivers, it is also dependant system and is affected by factors such as PCB layout, external components and any transient protection present on the USB signals. For USB compliance these may require a slight adjustment. This timing can be modified through a programmable setting stored in the same external EEPROM that is used for the USB descriptors. Timing can also be changed by adding appropriate passive components to the USB signals.



Copyright © Future Technology Devices International Limited

2 FT4232H Block Diagram

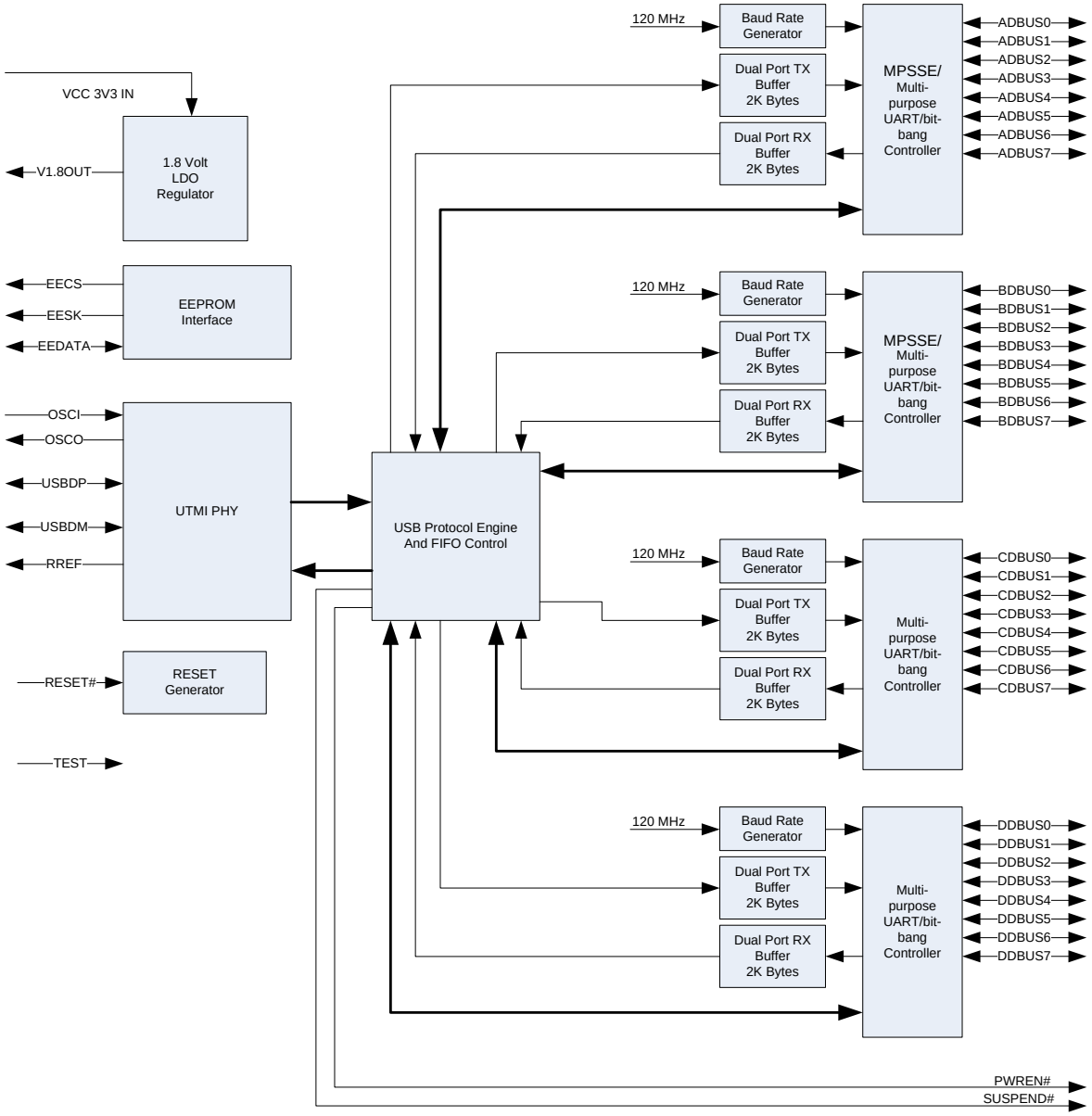

Figure 2.1 FT4232H Block Diagram

For a description of each function please refer to Section 4.

Table of Contents

1 Typical Applications 2
1.1 Driver Support 2
1.2 Part Numbers 3
1.3 USB Compliant 3
2 FT4232H Block Diagram 4
3 Device Pin Out and Signal Description 7
3.1 64-pin LQFP and QFN Package 7
3.1.1 Schematic Symbol 7
3.1.2 Pin Descriptions 7
3.1.3 Common Pins 9
3.1.4 Configured Pins 10
3.2 56-pin VQFN Package 11
3.2.1 Schematic Symbol for FT4232H-56Q 12
3.2.2 Pin Descriptions for FT4232H-56Q 12
3.2.3 Common Pins for FT4232H-56Q 14
3.2.4 Configured Pins for FT4232H-56Q 15
4 Function Description 17
4.1 Key Features 17
4.2 Functional Block Descriptions 17
4.3 FT232 UART Interface Mode Description 18
4.3.1 RS232 Configuration 18
4.3.2 RS422 Configuration 19
4.3.3 RS485 Configuration 20
4.4 MPSSE Interface Mode Description 21
4.4.1 MPSSE Adaptive Clocking 22
4.5 Synchronous & Asynchronous Bit-Bang Interface Mode Desc. ... 23
4.5.1 Asynchronous Bit-Bang Mode 23
4.5.2 Synchronous Bit-Bang Mode 23
4.6 FT4232H Mode Selection 24
5 Devices Characteristics and Ratings 25
5.1 Absolute Maximum Ratings 25
5.2 DC Characteristics 25
5.3 ESD Tolerance 27

Copyright © Future Technology Devices International Limited

5.4 Thermal Characteristics 27
6 FT4232H Configurations 28
6.1 USB Bus Powered Configuration 28
6.2 USB Self Powered Configuration 30
6.3 Oscillator Configuration 32
6.4 4 Channel Transmit and Receiver LED Indication Example 33
7 EEPROM Configuration 34
7.1 Default EEPROM Configuration 34
8 Package Parameters 36
8.1 FT4232HQ, QFN-64 Package Dimensions 36
8.2 FT4232HL, LQFP-64 Package Dimensions 37
8.3 FT4232H-56Q, VQFN-56 Package Dimensions 38
8.4 Solder Reflow Profile 39
9 Contact Information 40
Appendix A – References 41
Document References 41
Acronyms and Abbreviations 41
Appendix B - List of Figures and Tables 43
List of Tables 43
List of Figures 43
Appendix C - Revision History 45

Copyright © Future Technology Devices International Limited

3 Device Pin Out and Signal Description

3.1 64-pin LQFP and QFN Package

The 64-pin LQFP and 64-pin QFN have the same pin numbering for specific functions. This pin numbering is illustrated in the schematic symbol shown in **Figure 3.1**.

3.1.1 Schematic Symbol

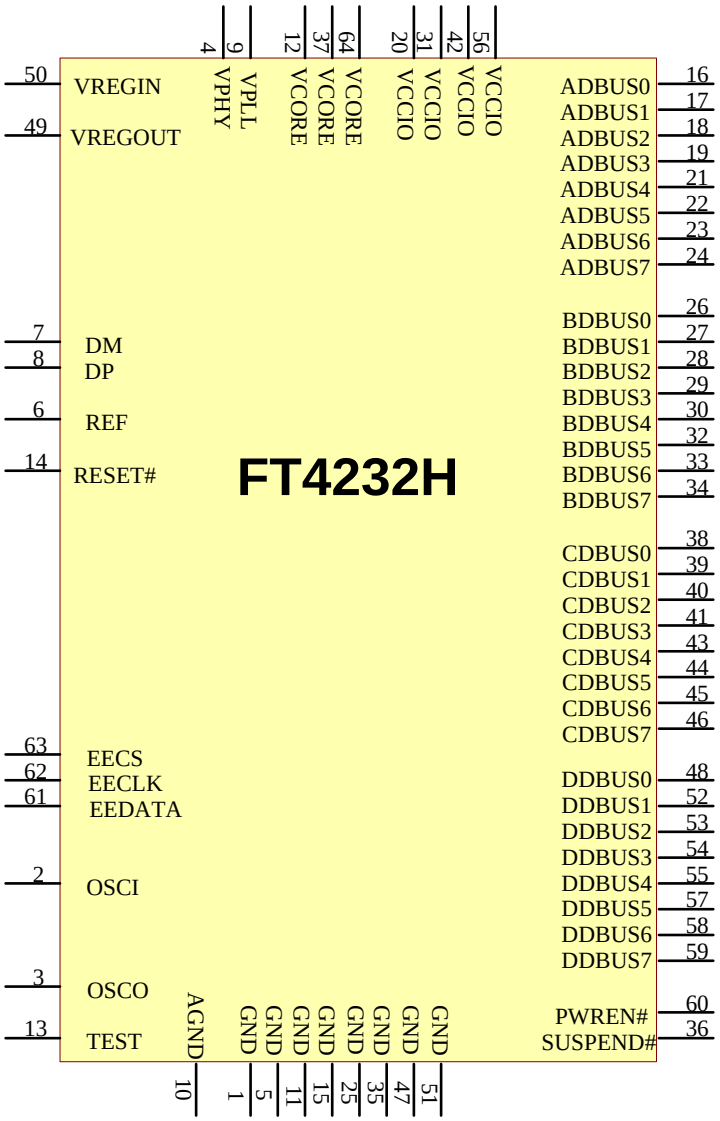

Figure 3.1 FT4232HL and FT4232HQ Schematic Symbol

3.1.2 Pin Descriptions

This section describes the operation of the FT4232H pins for 64-pin LQFP and 64-pin QFN. Both the 64-pin QFN and LQFP packages have the same function on each pin. The function of many pins is determined by the configuration of the FT4232H. The following table details the function of each pin dependent on the configuration of the interface. Each of the functions is described in Table 3.1.

Note: The convention used throughout this document for active low signals is the signal name followed by #

FT4232HL and FT4232HQ (64-pin)					
Pins		**Pin functions (depend on configuration)**			
Pin #	Pin Name	ASYNC Serial (RS232)	ASYNC Bit-bang	SYNC Bit-bang	MPSSE
Channel A					
16	ADBUS0	TXD	D0	D0	TCK/SK
17	ADBUS1	RXD	D1	D1	TDI/DO
18	ADBUS2	RTS#	D2	D2	TDO/DI
19	ADBUS3	CTS#	D3	D3	TMS/CS
21	ADBUS4	DTR#	D4	D4	GPIOL0
22	ADBUS5	DSR#	D5	D5	GPIOL1
23	ADBUS6	DCD#	D6	D6	GPIOL2
24	ADBUS7	RI#/ TXDEN*	D7	D7	GPIOL3
Channel B					
26	BDBUS0	TXD	D0	D0	TCK/SK
27	BDBUS1	RXD	D1	D1	TDI/DO
28	BDBUS2	RTS#	D2	D2	TDO/DI
29	BDBUS3	CTS#	D3	D3	TMS/CS
30	BDBUS4	DTR#	D4	D4	GPIOL0
32	BDBUS5	DSR#	D5	D5	GPIOL1
33	BDBUS6	DCD#	D6	D6	GPIOL2
34	BDBUS7	RI#/ TXDEN*	D7	D7	GPIOL3
Channel C					
38	CDBUS0	TXD	D0	D0	RS232 or Bit-Bang interface
39	CDBUS1	RXD	D1	D1	RS232 or Bit-Bang interface
40	CDBUS2	RTS#	D2	D2	RS232 or Bit-Bang interface
41	CDBUS3	CTS#	D3	D3	RS232 or Bit-Bang interface
43	CDBUS4	DTR#	D4	D4	RS232 or Bit-Bang interface
44	CDBUS5	DSR#	D5	D5	RS232 or Bit-Bang interface
45	CDBUS6	DCD#	D6	D6	RS232 or Bit-Bang interface
46	CDBUS7	RI#/ TXDEN*	D7	D7	RS232 or Bit-Bang interface
Channel D					
48	DDBUS0	TXD	D0	D0	RS232 or Bit-Bang interface
52	DDBUS1	RXD	D1	D1	RS232 or Bit-Bang interface
53	DDBUS2	RTS#	D2	D2	RS232 or Bit-Bang interface
54	DDBUS3	CTS#	D3	D3	RS232 or Bit-Bang interface
55	DDBUS4	DTR#	D4	D4	RS232 or Bit-Bang interface
57	DDBUS5	DSR#	D5	D5	RS232 or Bit-Bang interface
58	DDBUS6	DCD#	D6	D6	RS232 or Bit-Bang interface
59	DDBUS7	RI#/ TXDEN*	D7	D7	RS232 or Bit-Bang interface
60	PWREN#	PWREN#	PWREN#	PWREN#	PWREN#
36	SUSPEND#	SUSPEND#	SUSPEND#	SUSPEND#	SUSPEND#
		Configuration memory interface			

Copyright © Future Technology Devices International Limited

63	EECS	
62	EECLK	
61	EEDATA	

Table 3.1 FT4232H Pin Configurations for 64-pin QFN and LQFP package

***** RI#/ or TXDEN is selectable in the EEPROM. Default is RI#.

3.1.3 Common Pins

The operation of the following FT4232H pins are the same regardless of the configured mode:-

Pin No.	Name	Type	Description
12,37,64	VCORE	POWER Input	+1.8V input. Core supply voltage input.
20,31,42,56	VCCIO	POWER Input	+3.3V input. I/O interface power supply input. Failure to connect all VCCIO pins will result in failure of the device.
9	VPLL	POWER Input	+3.3V input. Internal PHY PLL power supply input. It is recommended that this supply is filtered using an LC filter.
4	VPHY	POWER Input	+3.3V Input. Internal USB PHY power supply input. Note that this cannot be connected directly to the USB supply. A +3.3V regulator must be used. It is recommended that this supply is filtered using an LC filter.
50	VREGIN	POWER Input	+3.3V Input. Integrated 1.8V voltage regulator input.
49	VREGOUT	POWER Output	+1.8V Output. Integrated voltage regulator output. Connect to VCORE with 3.3uF filter capacitor.
10	AGND	POWER Input	0V Analog ground.
1,5,11,15, 25,35,47,51	GND	POWER Input	0V Ground input.

Table 3.2 Power and Ground for 64-pin QFN and LQFP package

Pin No.	Name	Type	Description
2	OSCI	INPUT	Oscillator input.
3	OSCO	OUTPUT	Oscillator output.
6	REF	INPUT	Current reference – connect via a 12K Ohm resistor @ 1% to GND.
7	DM	I/O	USB Data Signal Minus.
8	DP	I/O	USB Data Signal Plus.
13	TEST	INPUT	IC test pin – for normal operation should be connected to GND.
14	RESET#	INPUT	Reset input (active low).
60	PWREN#	OUTPUT	Active low power-enable output. PWREN# = 0: Normal operation. PWREN# =1: USB SUSPEND mode or device has not been configured. This can be used by external circuitry to power down logic when device is in USB suspend or has not been configured.
36	SUSPEND#	OUTPUT	Active low when USB is in suspend mode.

Table 3.3 Common Function pins for 64-pin QFN and LQFP Package

Pin No.	Name	Type	Description
63	EECS	I/O	EEPROM – Chip Select. Tri-State during device reset.
62	EECLK	OUTPUT	Clock signal to EEPROM. Tri-State during device reset. When not in reset, this outputs the EEPROM clock.
61	EEDATA	I/O	EEPROM – Data I/O Connect directly to Data-In of the EEPROM and to Data-Out of the EEPROM via a 2.2K resistor. Also, pull Data-Out of the

Copyright © Future Technology Devices International Limited

			EEPROM to VCC via a 10K resistor for correct operation. Tri-State during device reset.

Table 3.4 EEPROM Interface Group for 64-pin QFN and LQFP Package

3.1.4 Configured Pins

The following sections describe the function of the configurable pins referred to in Table 3.1 which is determined by how the FT4232H is configured.

3.1.4.1 FT4232H Pins used as an Asynchronous Serial Interface

Any of the 4 channels of the FT4232H can be configured as an asynchronous serial UART interface (RS232/422/485). When configured in this mode, the pins used and the descriptions of the signals are shown in **Table 3.5**.

Channel A Pin No.	Channel B Pin No.	Channel C Pin No.	Channel D Pin No.	Name	Type	RS232 Configuration Description
16	***26***	***38***	***48***	TXD	OUTPUT	TXD = transmitter output
17	***27***	***39***	***52***	RXD	INPUT	RXD = receiver input
18	***28***	***40***	***53***	RTS#	OUTPUT	RTS# = Ready To send handshake output
19	***29***	***41***	***54***	CTS#	INPUT	CTS# = Clear To Send handshake input
21	***30***	***43***	***55***	DTR#	OUTPUT	DTR# = Data Transmit Ready modem signaling line
22	***32***	***44***	***57***	DSR#	INPUT	DSR# = Data Set Ready modem signaling line
23	***33***	***45***	***58***	DCD#	INPUT	DCD# = Data Carrier Detect modem signaling line
24	***34***	***46***	***59***	RI#/ TXDEN	INPUT/OUTPUT	RI# = Ring Indicator Control Input. When the Remote Wake up option is enabled in the EEPROM, taking RI# low can be used to resume the PC USB Host controller from suspend. (see note 1, 2 and 3) TXDEN = (TTL level). For use with RS485 level converters.

Table 3.5 Channel A, B, C and D Asynchronous Serial Interface Configured Pin Descriptions

Notes

1. When using remote wake-up, ensure the resistors are pulled-up in suspend. Also ensure peripheral designs do not allow any current sink paths that may partially power the peripheral.
2. If remote wake-up is enabled, a peripheral is allowed to draw up to 2.5mA in suspend. If remote wake-up is disabled, the peripheral must draw no more than 500uA in suspend.
3. If a Pull-down is enabled, the FT4232H will not wake up from suspend.

3.1.4.2 FT4232H Pins used in a Synchronous or Asynchronous Bit-Bang Interface

The FT4232H channel A, B, C or channel D can be configured as a bit-bang interface. There are two types of bit-bang modes: synchronous and asynchronous.

When configured in any bit-bang mode (synchronous or asynchronous), the pins used and the descriptions of the signals are shown in **Table 3.6**

Channel Number	Pin Nos.	Name	Type	Synchronous or Asynchronous Bit-Bang Configuration Description
A	***24,23,22,21, 19,18,17,16***	ADBUS[7:0]	I/O	Channel A, D7 to D0 bidirectional bit-bang data

B	***34,33,32,30, 29,28,27,26***	BDBUS[7:0]	I/O	Channel B, D7 to D0 bidirectional bit-bang data
C	**46,45,44,43, 41,40,39,38**	CDBUS[7:0]	I/O	Channel C, D7 to D0 bidirectional bit-bang data
D	***59,58,57,55 54,53,52,48***	DDBUS[7:0]	I/O	Channel D, D7 to D0 bidirectional bit-bang data

Table 3.6 Channel A, B, C & D Synchronous/Asynchronous Bit-Bang Configured Pin Descriptions

For a functional description of this mode, please refer to section 4.5 Synchronous & Asynchronous Bit-Bang Interface Mode Desc.

3.1.4.3 FT4232H pins used in an MPSSE

The FT4232H channel A and channel B, each have a Multi-Protocol Synchronous Serial Engine (MPSSE). Each MPSSE can be independently configured to a number of industry standard serial interface protocols such as JTAG, I^2C or SPI, or it can be used to implement a proprietary bus protocol. For example, it is possible to use one of the FT4232H's channels (e.g. channel A) to connect to an SRAM configurable FPGA such as supplied by Altera or Xilinx. The FPGA device would normally be un-configured (i.e. have no defined function) at power-up. Application software on the PC could use the MPSSE to download configuration data to the FPGA over USB. This data would define the hardware function on power up. The other MPSSE channel (e.g. channel B) would be available for another serial interface function while channel C and channel D can be configured as UART or bit-bang mode. Alternatively each MPSSE can be used to control a number of GPIO pins. When configured in this mode, the pins used and the descriptions of the signals are shown in **Table 3.7**

Channel A Pin No.	Channel B Pin No.	Name	Type	MPSSE Configuration Description
16	**26**	TCK/SK	OUTPUT	Clock Signal Output. For example: JTAG – TCK, Test interface clock SPI – SK, Serial Clock
17	**27**	TDI/DO	OUTPUT	Serial Data Output. For example: JTAG – TDI, Test Data Input SPI – DO, serial data output
18	**28**	TDO/DI	INPUT	Serial Data Input. For example: JTAG – TDO, Test Data output SPI – DI, Serial Data Input
19	**29**	TMS/CS	OUTPUT	Output Signal Select. For example: JTAG – TMS, Test Mode Select SPI – CS, Serial Chip Select
21	**30**	GPIOL0	I/O	General Purpose input/output
22	**32**	GPIOL1	I/O	General Purpose input/output
23	**33**	GPIOL2	I/O	General Purpose input/output
24	**34**	GPIOL3	I/O	General Purpose input/output

Table 3.7 Channel A and Channel B MPSSE Configured Pin Descriptions

For a functional description of this mode, please refer to section 4.4.

When either Channel A or Channel B or both channels are used in MPSSE mode, Channel C and Channel D can be configured as asynchronous serial interface (RS232/422/485) or Bit-Bang mode or a combination of both.

3.2 56-pin VQFN Package

The 56-pin VQFN with lower pin count and small size package is also available for the FT4232H. The differences exist on power/ground and pin number for each pin. The part number is FT4232H-56Q to distinguish it from the 64-pin package type. All the functions are supported in the 56-pin VQFN package. The pin numbering is illustrated in the schematic symbol shown in Figure 3.2.

Copyright © Future Technology Devices International Limited

3.2.1 Schematic Symbol for FT4232H-56Q

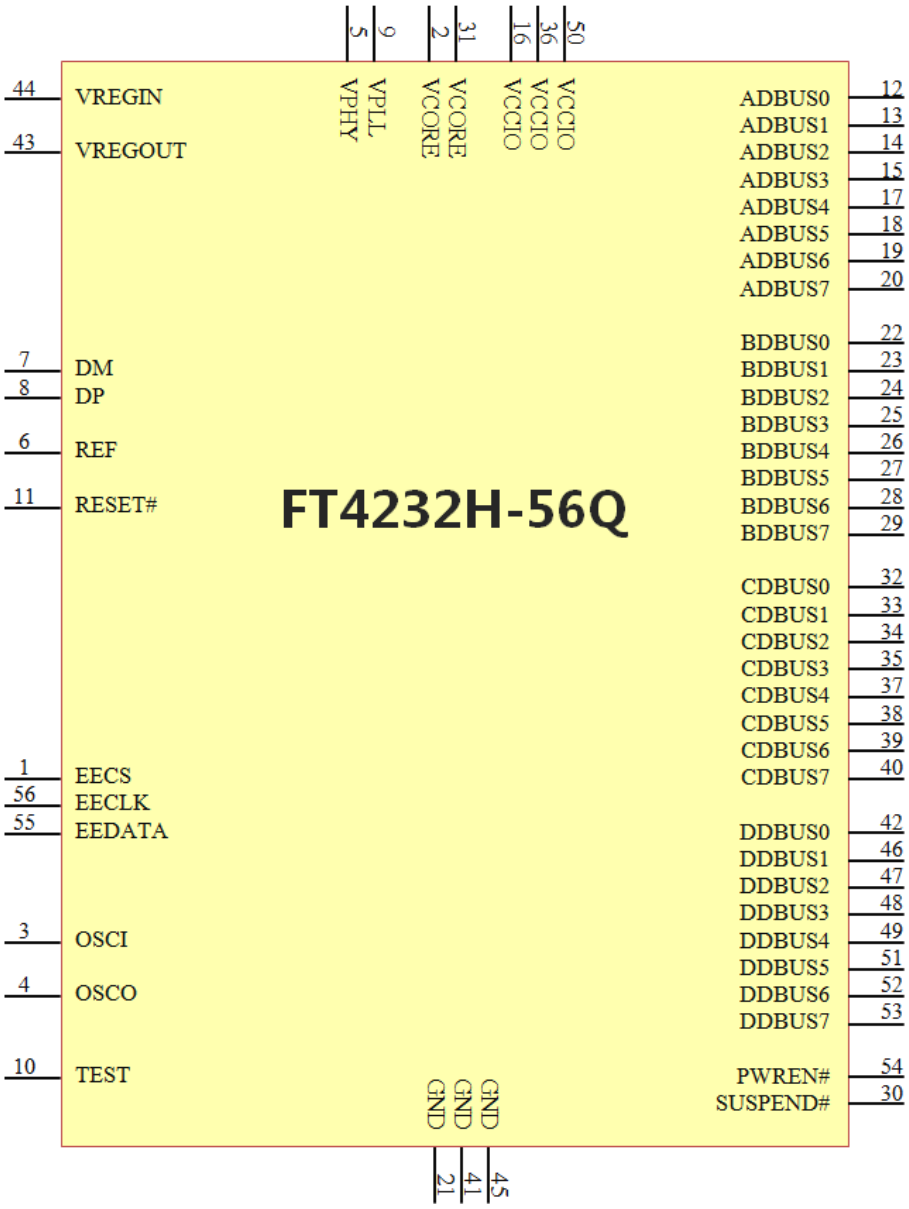

Figure 3.2 FT4232H-56Q Schematic Symbol

3.2.2 Pin Descriptions for FT4232H-56Q

This section describes the operation of the FT4232H-56Q pins for 56-pin VQFN package. The function of many pins is determined by the configuration of the FT4232H-56Q. The following table details the function of each pin dependent on the configuration of the interface. Each of the functions is described in Table 3.8.

Note: The convention used throughout this document for active low signals is the signal name followed by #

FT4232H-56Q					
Pins		**Pin functions (depend on configuration)**			
Pin #	Pin Name	ASYNC Serial (RS232)	ASYNC Bit-bang	SYNC Bit-bang	MPSSE
Channel A					
12	ADBUS0	TXD	D0	D0	TCK/SK
13	ADBUS1	RXD	D1	D1	TDI/DO

14	ADBUS2	RTS#	D2	D2	TDO/DI
15	ADBUS3	CTS#	D3	D3	TMS/CS
17	ADBUS4	DTR#	D4	D4	GPIOL0
18	ADBUS5	DSR#	D5	D5	GPIOL1
19	ADBUS6	DCD#	D6	D6	GPIOL2
20	ADBUS7	RI#/ TXDEN*	D7	D7	GPIOL3
Channel B					
22	BDBUS0	TXD	D0	D0	TCK/SK
23	BDBUS1	RXD	D1	D1	TDI/DO
24	BDBUS2	RTS#	D2	D2	TDO/DI
25	BDBUS3	CTS#	D3	D3	TMS/CS
26	BDBUS4	DTR#	D4	D4	GPIOL0
27	BDBUS5	DSR#	D5	D5	GPIOL1
28	BDBUS6	DCD#	D6	D6	GPIOL2
29	BDBUS7	RI#/ TXDEN*	D7	D7	GPIOL3
Channel C					
32	CDBUS0	TXD	D0	D0	RS232 or Bit-Bang interface
33	CDBUS1	RXD	D1	D1	RS232 or Bit-Bang interface
34	CDBUS2	RTS#	D2	D2	RS232 or Bit-Bang interface
35	CDBUS3	CTS#	D3	D3	RS232 or Bit-Bang interface
37	CDBUS4	DTR#	D4	D4	RS232 or Bit-Bang interface
38	CDBUS5	DSR#	D5	D5	RS232 or Bit-Bang interface
39	CDBUS6	DCD#	D6	D6	RS232 or Bit-Bang interface
40	CDBUS7	RI#/ TXDEN*	D7	D7	RS232 or Bit-Bang interface
Channel D					
42	DDBUS0	TXD	D0	D0	RS232 or Bit-Bang interface
46	DDBUS1	RXD	D1	D1	RS232 or Bit-Bang interface
47	DDBUS2	RTS#	D2	D2	RS232 or Bit-Bang interface
48	DDBUS3	CTS#	D3	D3	RS232 or Bit-Bang interface
49	DDBUS4	DTR#	D4	D4	RS232 or Bit-Bang interface
51	DDBUS5	DSR#	D5	D5	RS232 or Bit-Bang interface
52	DDBUS6	DCD#	D6	D6	RS232 or Bit-Bang interface
53	DDBUS7	RI#/ TXDEN*	D7	D7	RS232 or Bit-Bang interface
54	PWREN#	PWREN#	PWREN#	PWREN#	PWREN#
30	SUSPEND#	SUSPEND#	SUSPEND#	SUSPEND#	SUSPEND#
		Configuration memory interface			
1	EECS				
56	EECLK				
55	EEDATA				

Table 3.8 FT4232H Pin Configurations for 56-Pin VQFN Package

***** RI#/ or TXDEN is selectable in the EEPROM. Default is RI#.

3.2.3 Common Pins for FT4232H-56Q

The operation of the following FT4232H-56Q pins are the same regardless of the configured mode:-

Pin No.	Name	Type	Description
2,31	VCORE	POWER Input	+1.8V input. Core supply voltage input.
16,36,50	VCCIO	POWER Input	+3.3V input. I/O interface power supply input. Failure to connect all VCCIO pins will result in failure of the device.
9	VPLL	POWER Input	+3.3V input. Internal PHY PLL power supply input. It is recommended that this supply is filtered using an LC filter.
5	VPHY	POWER Input	+3.3V Input. Internal USB PHY power supply input. Note that this cannot be connected directly to the USB supply. A +3.3V regulator must be used. It is recommended that this supply is filtered using an LC filter.
44	VREGIN	POWER Input	+3.3V Input. Integrated 1.8V voltage regulator input.
43	VREGOUT	POWER Output	+1.8V Output. Integrated voltage regulator output. Connect to VCORE with 3.3uF filter capacitor.
21,41,45	GND	POWER Input	0V Ground input.

Table 3.9 Power and Ground for 56-pin VQFN package

Pin No.	Name	Type	Description
3	OSCI	INPUT	Oscillator input.
4	OSCO	OUTPUT	Oscillator output.
6	REF	INPUT	Current reference – connect via a 12K Ohm resistor @ 1% to GND.
7	DM	INPUT	USB Data Signal Minus.
8	DP	INPUT	USB Data Signal Plus.
10	TEST	INPUT	IC test pin – for normal operation should be connected to GND.
11	RESET#	INPUT	Reset input (active low).
54	PWREN#	OUTPUT	Active low power-enable output. PWREN# = 0: Normal operation. PWREN# =1: USB SUSPEND mode or device has not been configured. This can be used by external circuitry to power down logic when device is in USB suspend or has not been configured.
30	SUSPEND#	OUTPUT	Active low when USB is in suspend mode.

Table 3.10 Common Function pins for 56-pin VQFN Package

Pin No.	Name	Type	Description
1	EECS	I/O	EEPROM – Chip Select. Tri-State during device reset.
56	EECLK	OUTPUT	Clock signal to EEPROM. Tri-State during device reset. When not in reset, this outputs the EEPROM clock.
55	EEDATA	I/O	EEPROM – Data I/O Connect directly to Data-In of the EEPROM and to Data-Out of the EEPROM via a 2.2K resistor. Also, pull Data-Out of the EEPROM to VCC via a 10K resistor for correct operation. Tri-State during device reset.

Table 3.11 EEPROM Interface Group for 56-pin VQFN Package

Copyright © Future Technology Devices International Limited

3.2.4 Configured Pins for FT4232H-56Q

The following sections describe the function of the configurable pins referred to in Table 3.8 which is determined by how the FT4232H-56Q is configured.

3.2.4.1 FT4232H-56Q pins used as an asynchronous serial interface

Any of the 4 channels of the FT4232H-56Q can be configured as an asynchronous serial UART interface (RS232/422/485). When configured in this mode, the pins used and the descriptions of the signals are shown in **Table 3.12**.

Channel A Pin No.	Channel B Pin No.	Channel C Pin No.	Channel D Pin No.	Name	Type	RS232 Configuration Description
12	***22***	***32***	***42***	TXD	OUTPUT	TXD = transmitter output
13	***23***	***33***	***46***	RXD	INPUT	RXD = receiver input
14	***24***	***34***	***47***	RTS#	OUTPUT	RTS# = Ready To send handshake output
15	***25***	***35***	***48***	CTS#	INPUT	CTS# = Clear To Send handshake input
17	***26***	***37***	***49***	DTR#	OUTPUT	DTR# = Data Transmit Ready modem signaling line
18	***27***	***38***	***51***	DSR#	INPUT	DSR# = Data Set Ready modem signaling line
19	***28***	***39***	***52***	DCD#	INPUT	DCD# = Data Carrier Detect modem signaling line
20	***29***	***40***	***53***	RI#/ TXDEN	INPUT/OUTPUT	RI# = Ring Indicator Control Input. When the Remote Wake up option is enabled in the EEPROM, taking RI# low can be used to resume the PC USB Host controller from suspend. (see note 1, 2 and 3) TXDEN = (TTL level). For use with RS485 level converters.

Table 3.12 Channel A, B, C & D Asynchronous Serial Interface Configured Pin Desc. for FT4232H-56Q

Notes

1. When using remote wake-up, ensure the resistors are pulled-up in suspend. Also ensure peripheral designs do not allow any current sink paths that may partially power the peripheral.
2. If remote wake-up is enabled, a peripheral is allowed to draw up to 2.5mA in suspend. If remote wake-up is disabled, the peripheral must draw no more than 500uA in suspend.
3. If a Pull-down is enabled, the FT4232H will not wake up from suspend.

3.2.4.2 FT4232H-56Q pins used in a Synchronous or Asynchronous Bit-Bang Interface

The FT4232H channel A, B, C or channel D can be configured as a bit-bang interface. There are two types of bit-bang modes: synchronous and asynchronous. When configured in any bit-bang mode (synchronous or asynchronous), the pins used and the descriptions of the signals are shown in **Table 3.13**

Channel Number	Pin Nos.	Name	Type	Synchronous or Asynchronous Bit-Bang Configuration Description
A	***20,19,18,17, 15,14,13,12***	ADBUS[7:0]	I/O	Channel A, D7 to D0 bidirectional bit-bang data
B	***29,28,27,26, 25,24,23,22***	BDBUS[7:0]	I/O	Channel B, D7 to D0 bidirectional bit-bang data
C	**40,39,38,37,**	CDBUS[7:0]	I/O	Channel C, D7 to D0 bidirectional bit-bang data

Copyright © Future Technology Devices International Limited

	35,34,33,32			
D	***53,52,51,49 48,47,46,42***	DDBUS[7:0]	I/O	Channel D, D7 to D0 bidirectional bit-bang data

Table 3.13 Channel A, B, C & D Synchronous/Asynchronous Bit-Bang Configured Pin Desc. for FT4232H-56Q

For a functional description of this mode, please refer to section 4.5 Synchronous & Asynchronous Bit-Bang Interface Mode Desc**.**

3.2.4.3 FT4232H-56Q pins used in an MPSSE

The FT4232H channel A and channel B, each have a Multi-Protocol Synchronous Serial Engine (MPSSE). Each MPSSE can be independently configured to a number of industry standard serial interface protocols such as JTAG, I2C or SPI, or it can be used to implement a proprietary bus protocol. For example, it is possible to use one of the FT4232H's channels (e.g. channel A) to connect to an SRAM configurable FPGA such as supplied by Altera or Xilinx. The FPGA device would normally be un-configured (i.e. have no defined function) at power-up. Application software on the PC could use the MPSSE to download configuration data to the FPGA over USB. This data would define the hardware function on power up. The other MPSSE channel (e.g. channel B) would be available for another serial interface function while channel C and channel D can be configured as UART or bit-bang mode. Alternatively each MPSSE can be used to control a number of GPIO pins. When configured in this mode, the pins used and the descriptions of the signals are shown in **Table 3.14**

Channel A Pin No.	Channel B Pin No.	Name	Type	MPSSE Configuration Description
12	**22**	TCK/SK	OUTPUT	Clock Signal Output. For example: JTAG – TCK, Test interface clock SPI – SK, Serial Clock
13	**23**	TDI/DO	OUTPUT	Serial Data Output. For example: JTAG – TDI, Test Data Input SPI – DO, serial data output
14	**24**	TDO/DI	INPUT	Serial Data Input. For example: JTAG – TDO, Test Data output SPI – DI, Serial Data Input
15	**25**	TMS/CS	OUTPUT	Output Signal Select. For example: JTAG – TMS, Test Mode Select SPI – CS, Serial Chip Select
17	**26**	GPIOL0	I/O	General Purpose input/output
18	**27**	GPIOL1	I/O	General Purpose input/output
19	**28**	GPIOL2	I/O	General Purpose input/output
20	**29**	GPIOL3	I/O	General Purpose input/output

Table 3.14 Channel A and Channel B MPSSE Configured Pin Descriptions for FT4232H-56Q

For a functional description of this mode, please refer to section 4.4.

When either Channel A or Channel B or both channels are used in MPSSE mode, Channel C and Channel D can be configured as asynchronous serial interface (RS232/422/485) or Bit-Bang mode or a combination of both.

Copyright © Future Technology Devices International Limited

4 Function Description

The FT4232H is FTDI's 5th generation of USB devices. The FT4232H is a USB 2.0 High Speed (480Mb/s) to UART/MPSSE ICs. It has the capability of being configured in a variety of industry standard serial interfaces.

The FT4232H has four independent configurable interfaces. Two of these interfaces can be configured as UART, JTAG, SPI, I^2C or bit-bang mode, using an MPSSE, with independent baud rate generators. The remaining two interfaces can be configured as UART or bit-bang.

4.1 Key Features

USB High Speed to Quad Interface. The FT4232H is a USB 2.0 High Speed (480Mbits/s) to four independent flexible/configurable serial interfaces.

Functional Integration. The FT4232H integrates a USB protocol engine which controls the physical Universal Transceiver Macrocell Interface (UTMI) and handles all aspects of the USB 2.0 High Speed interface. The FT4232H includes an integrated +1.8V Low Drop-Out (LDO) regulator and 12MHz to 480MHz PLL. It also includes 2kbytes Tx and Rx data buffers per channel. The FT4232H effectively integrates the entire USB protocol on a chip.

MPSSE. Multi-Purpose Synchronous Serial Engines (MPSSE), capable of speeds up to 30 Mbits/s, provides flexible synchronous interface configurations.

Data Transfer Rate. The FT4232H supports a data transfer rate up to 12 Mbit/s when configured as an RS232/RS422/RS485 UART interface. Please note the FT4232H does not support the baud rates of 7 Mbaud 9 Mbaud, 10 Mbaud and 11 Mbaud.

Latency Timer. This is really a feature of the driver and is used to as a timeout to flush short packets of data back to the PC. The default is 16ms, but it can be altered between 0ms and 256ms. At 0ms latency you get a packet transfer on every high speed micro frame.

4.2 Functional Block Descriptions

Quad Multi-Purpose UART/MPSSE Controllers. The FT4232H has four independent UART/MPSSE Controllers. These blocks control the UART data or control the Bit-Bang mode if selected by the SETUP command. The blocks used on channel A and channel B also contain a MPSSE (Multi-Protocol Synchronous Serial Engine) in each of them which can be used independently of each other and the remaining UART channels. Using this it can be configured under software command to have 1 MPSSE + 3 UARTS (each UART can be set to Bit Bang mode to gain extra I/O if required) or 2 MPSSE + 2 UARTS.

USB Protocol Engine and FIFO control. The USB Protocol Engine controls and manages the interface between the UTMI PHY and the FIFOs of the chip. It also handles power management and the USB protocol specification.

Dual Port FIFO TX Buffer (2Kbytes per channel). Data from the Host PC is stored in these buffers to be used by the Multi-purpose UART/FIFO controllers. This is controlled by the USB Protocol Engine and FIFO control block.

Dual Port FIFO RX Buffer (2Kbytes per channel). Data from the Multi-purpose UART/FIFO controllers is stored in these blocks to be sent back to the Host PC when requested. This is controlled by the USB Protocol Engine and FIFO control block.

RESET Generator - The integrated Reset Generator Cell provides a reliable power-on reset to the device internal circuitry at power up. The RESET# input pin allows an external device to reset the FT4232H. RESET# should be tied to VCCIO (+3.3v) if not being used.

Independent Baud Rate Generators - The Baud Rate Generators provides an x16 or an x10 clock input to the UART's from a 120MHz reference clock and consists of a 14 bit pre-scaler and 4 register bits which provide fine tuning of the baud rate (used to divide by a number plus a fraction). This determines the Baud Rate of the UART which is programmable from 183 baud to 12 million baud. The FT2232H does not support the baud rates of 7 Mbaud 9 Mbaud, 10 Mbaud and 11 Mbaud.

Copyright © Future Technology Devices International Limited

See FTDI application note AN232B0-5 for more details.

+1.8V LDO Regulator. The +1.8V LDO regulator generates the +1.8 volts for the core and the USB transceiver cell. Its input (VREGIN) must be connected to a +3.3V external power source. It is also recommended to add an external filtering capacitor to the VREGIN. There is no direct connection from the +1.8V output (VREGOUT) and the internal functions of the FT4232H. The PCB must be routed to connect VREGOUT to the pins that require the +1.8V including VREGIN.

UTMI PHY. The Universal Transceiver Macrocell Interface (UTMI) physical interface cell. This block handles the Full speed / High Speed SERDES (serialise – de-serialise) function for the USB TX/RX data. It also provides the clocks for the rest of the chip. A 12 MHz crystal should be connected to the OSCI and OSCO pins. A 12K Ohm resistor should be connected between REF and GND on the PCB.

The UTMI PHY functions include:

- Supports 480 Mbit/s "High Speed" (HS)/ 12 Mbit/s "Full Speed" (FS), FS Only and "Low Speed" (LS).
- SYNC/EOP generation and checking.
- Data and clock recovery from serial stream on the USB.
- Bit-stuffing/unstuffing; bit stuff error detection.
- Manages USB Resume, Wake Up and Suspend functions.
- Single parallel data clock output with on-chip PLL to generate higher speed serial data clocks.

EEPROM Interface. When used without an external EEPROM the FT4232H defaults to a quad USB to an asynchronous serial port device. Adding an external 93C46 (93C56 or 93C66) EEPROM allows customization of USB VID, PID, Serial Number, Product Description Strings and Power Descriptor value of the FT4232H for OEM applications. Other parameters controlled by the EEPROM include Remote Wake Up, Soft Pull Down on Power-Off and I/O pin drive strength.

The EEPROM must be a 16 bit wide configuration such as a Microchip 93LC46B or equivalent capable of a 1Mbit/s clock rate at VCC = +3.00V to 3.6V. The EEPROM is programmable in-circuit over USB using a utility program called FT_PROG available from FTDI's web site (**www.ftdichip.com**). This allows a blank part to be soldered onto the PCB and programmed as part of the manufacturing and test process.

If no EEPROM is connected (or the EEPROM is blank), the FT4232H will default to serial ports. The device uses its built-in default VID (0403), PID (6011) Product Description and Power Descriptor Value. In this case, the device will not have a serial number as part of the USB descriptor.

4.3 FT232 UART Interface Mode Description

The FT4232H can be configured in similar UART modes as the FTDI FT232 devices (an asynchronous serial interface). The following examples illustrate how to configure the FT4232H with an RS232, RS422 or RS485 interfaces. The FT4232 can be configured as a mixture of these interfaces.

4.3.1 RS232 Configuration

Figure 4.1 illustrates how the FT4232H channel A can be configured with an RS232 UART interface. This can be repeated for channels B, C and D to provide a quad RS232, but has been omitted for clarity.

Copyright © Future Technology Devices International Limited

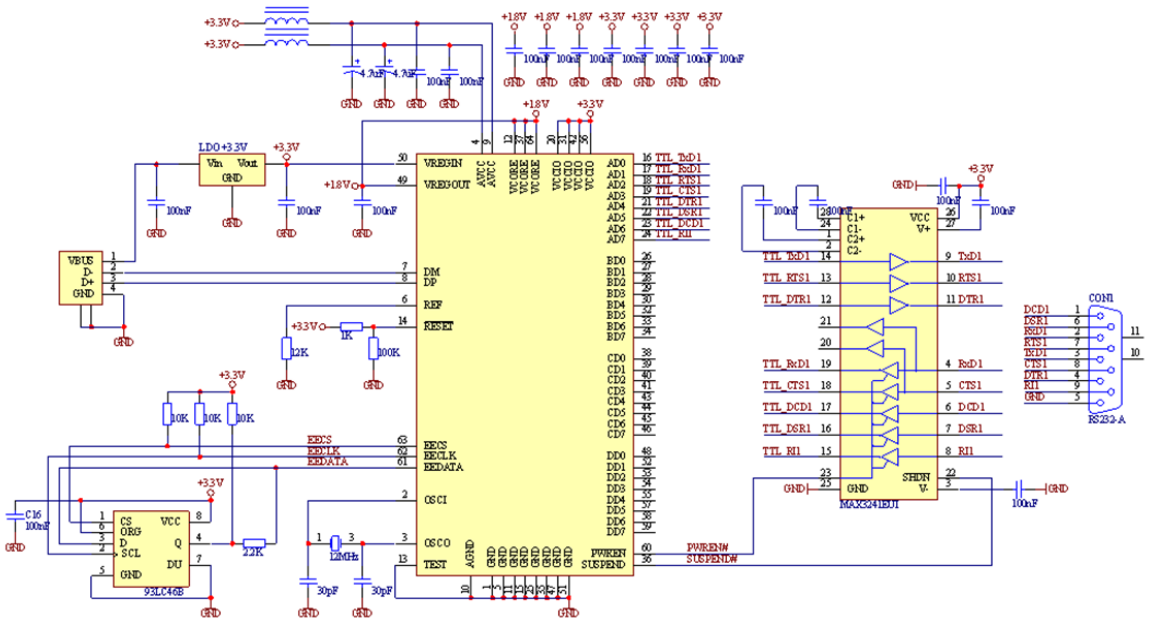

Figure 4.1 RS232 Configuration

4.3.2 RS422 Configuration

Figure 4.2 illustrates how the FT4232H can be configured as a dual RS422 interface. The FT4232H can have all 4 channels connected as RS422, but only channel A and channel C are shown for clarity.

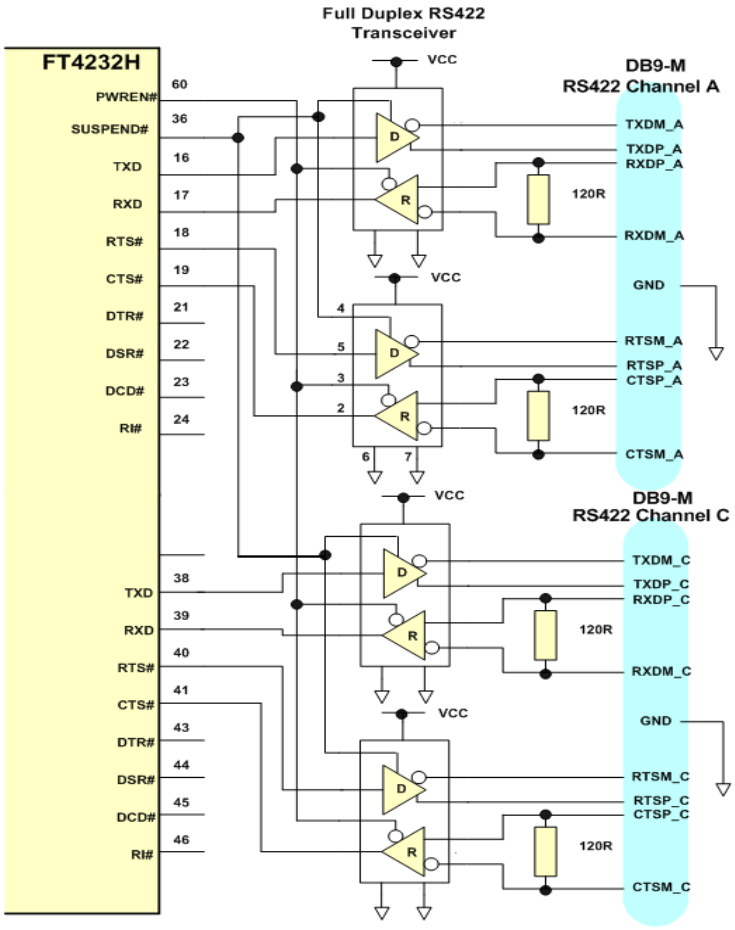

Figure 4.2 Dual RS422 Configurations

In this case both channel A and channel C are configured as UART operating at TTL levels and a level converter device (full duplex RS485 transceiver) is used to convert the TTL level signals from the FT4232H to RS422 levels. The PWREN# signal is used to power down the level shifters such that they operate in a low quiescent current when the USB interface is in suspend mode.

4.3.3 RS485 Configuration

Figure 4.3 illustrates how the FT4232H can be configured as a dual RS485 interface. The FT4232H can have all 4 channels connected as RS485, but only channel A and channel C are shown for clarity.

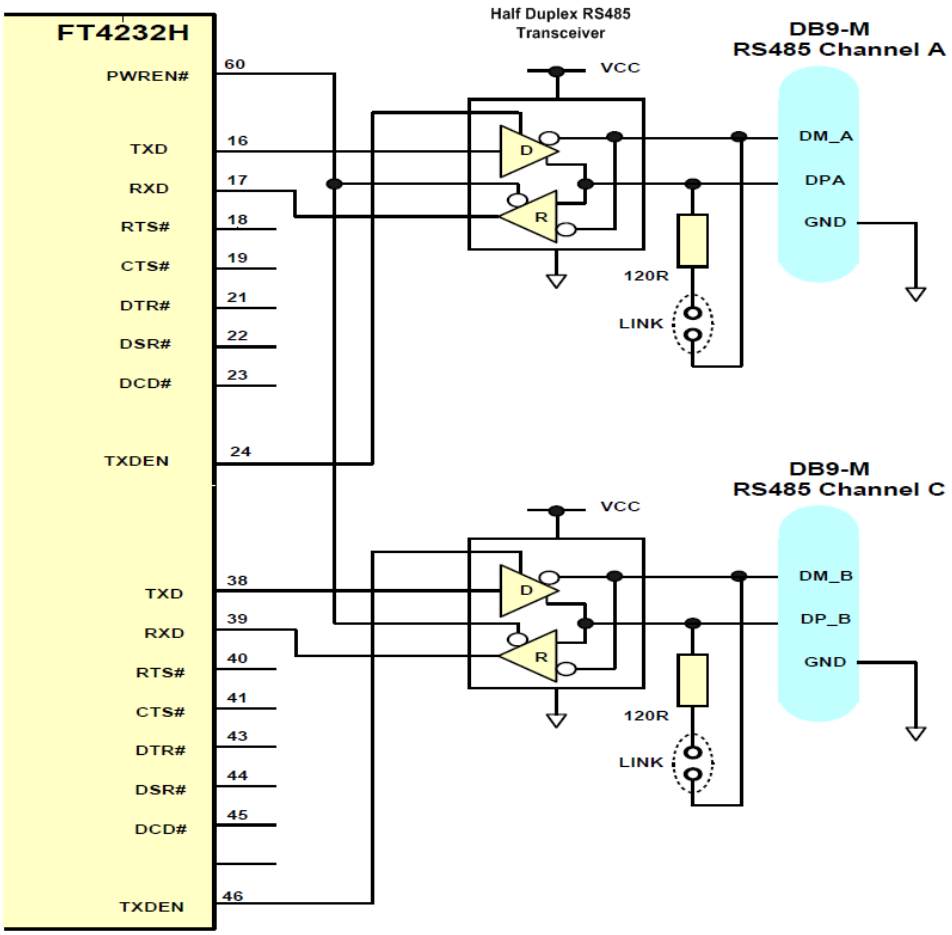

Figure 4.3 Dual RS485 Configurations

In this case both channel A and channel C are configured as RS485 operating at TTL levels and a level converter device (half duplex RS485 transceiver) is used to convert the TTL level signals from the FT232H to RS485 levels. It has separate enables on both the transmitter and receiver. With RS485, the transmitter is only enabled when a character is being transmitted from the UART. The TXDEN pins on the FT4232H are provided for exactly that purpose, and so the transmitter enables are wired to the TXDEN"s. The receiver enable is active low, so it is wired to the PWREN# pin to disable the receiver when in USB suspend mode.

RS485 is a multi-drop network – i.e. many devices can communicate with each other over a single two wire cable connection. The RS485 cable requires to be terminated at each end of the cable. Links are provided to allow the cable to be terminated if the device is physically positioned at either end of the cable.

In this example the data transmitted by the FT4232H is also received by the device that is transmitting. This is a common feature of RS485 and requires the application software to remove the transmitted data from the received data stream. With the FT4232H it is possible to do this entirely in hardware – simply modify the schematic so that RXD of the FT4232H is the logical OR of the level converter device receiver output with TXDEN using an HC32 or similar logic gate.

Copyright © Future Technology Devices International Limited

4.4 MPSSE Interface Mode Description

MPSSE Mode is designed to allow the FT4232H to interface efficiently with synchronous serial protocols such as JTAG, I2C and SPI Bus. It can also be used to program SRAM based FPGA's over USB. The MPSSE interface is designed to be flexible so that it can be configured to allow any synchronous serial protocol (industry standard or proprietary) to be implemented using the FT4232H. MPSSE is only available on channel A and channel B.

MPSSE is fully configurable, and is programmed by sending commands down the data stream. These can be sent individually or more efficiently in packets. MPSSE is capable of a maximum sustained data rate of 30 Mbits/s.

When a channel is configured in MPSSE mode, the IO timing and signals used are shown in Figure 4.4 and Table 4.1. These show timings for CLKOUT=30MHz. CLKOUT can be divided internally to be provide a slower clock.

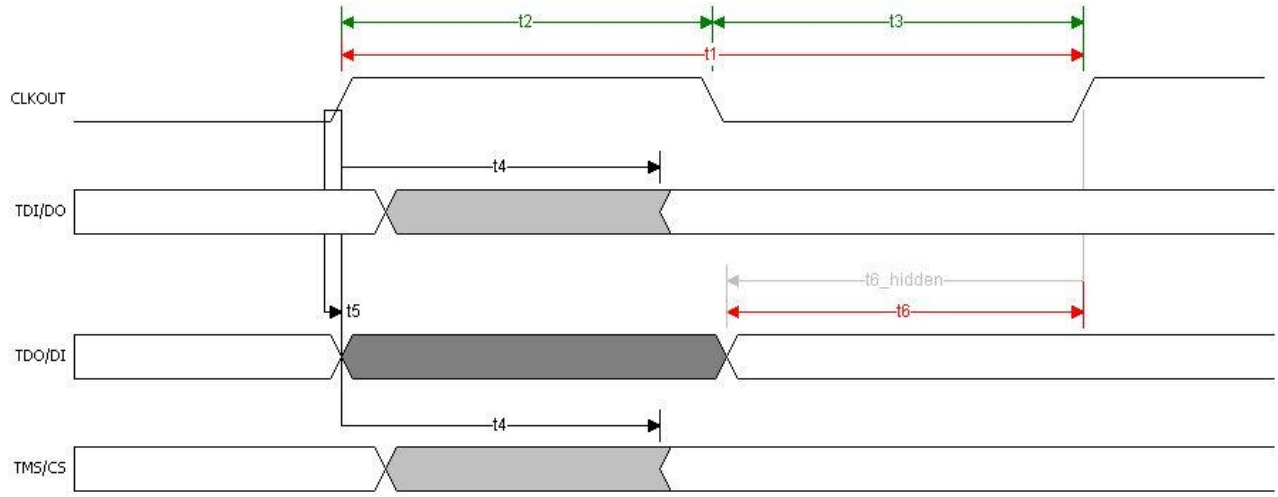

Figure 4.4 MPSSE Signal Waveforms

NAME	MIN	NOM	MAX	Units	COMMENT
t1		33.33		ns	CLKOUT period
t2	15	16.67		ns	CLKOUT high period
t3	15	16.67		ns	CLKOUT low period
t4	1		7.15	ns	CLKOUT to TDI/DO delay
t5	0			ns	TDO/DI hold time
t6	11				TDO/DI setup time

Table 4.1 MPSSE Signal Timings

MPSSE mode is enabled using Set Bit Bang Mode driver command. A hex value of 2 will enable it, and a hex value of 0 will reset the device. See application note AN2232-02, "Bit Mode Functions for the FT2232" for more details and examples.

The MPSSE command set is fully described in application note AN_108 – "Command Processor for MPSSE and MCU Host Bus Emulation Modes".

The following additional application notes are available for configuring the MPSSE:

- AN_109 – "Programming Guide for High Speed FTCI2C DLL"
- AN_110 – "Programming Guide for High Speed FTCJTAG DLL"
- AN_111 – "Programming Guide for High Speed FTCSPI DLL"

Copyright © Future Technology Devices International Limited

4.4.1 MPSSE Adaptive Clocking

Adaptive clocking is a new MPSSE feature added to the FT24232H MPSSE engine.

The mode is effectively handshaking the CLK signal with a return clock RTCK. This is a technique used by ARM processors.

The FT4232H will assert the CLK line and wait for the RTCK to be returned from the target device to GPIOL3 line before changing the TDO (data out line).

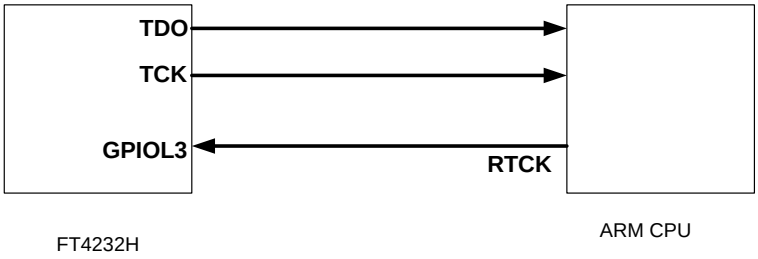

Figure 4.5 Adaptive Clocking Interconnect

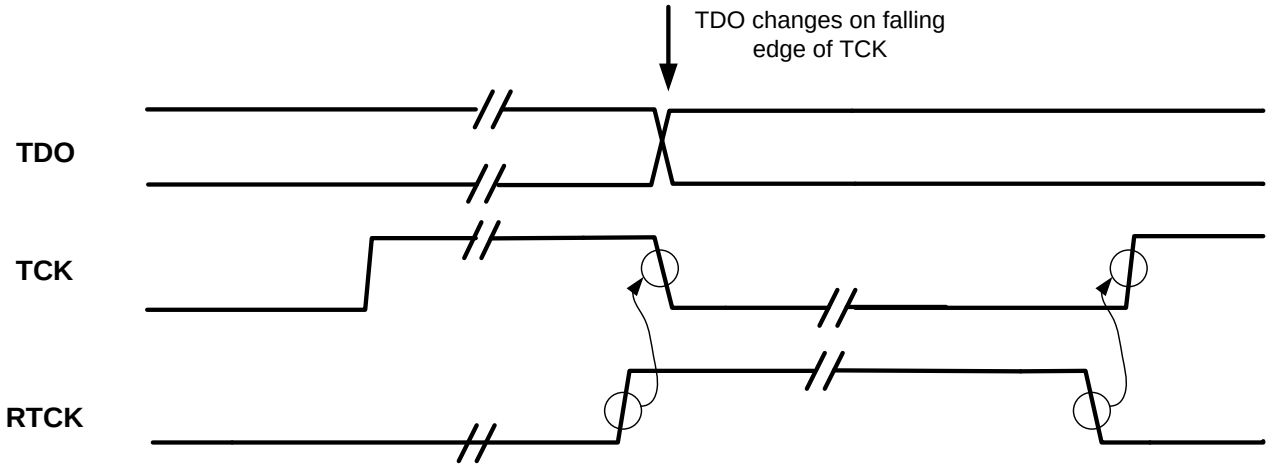

Figure 4.6: Adaptive Clocking waveform

Adaptive clocking is not enabled by default.

See: AN108 - Command Processor For MPSSE and MCU Host Bus Emulation Modes.

4.5 Synchronous & Asynchronous Bit-Bang Interface Mode Desc.

The FT4232H channel A, B, C or channel D can be configured as a bit-bang interface. There are two types of bit-bang modes: synchronous and asynchronous.

4.5.1 Asynchronous Bit-Bang Mode

Asynchronous Bit-Bang mode is the same as BM-style Bit-Bang mode. On any channel configured in asynchronous bit-bang mode, data written to the device in the normal manner will be self-clocked onto the parallel I/O data pins (those which have been configured as outputs). Each I/O pin can be independently set as an input or an output. The rate that the data is clocked out at is controlled by the baud rate generator.

For the data to change there has to be new data written, and the baud rate clock has to tick. If no new data is written to the channel, the pins will hold the last value written.

4.5.2 Synchronous Bit-Bang Mode

The synchronous Bit-Bang mode will only update the output parallel I/O port pins whenever data is sent from the USB interface to the parallel interface. When this is done, data is read from the USB Rx FIFO buffer and written out on the pins. Data can only be received from the parallel pins (to the USB Tx FIFO interface) when the parallel interface has been written to.

With Synchronous Bit-Bang mode, data will only be sent out by the FT4232H if there is space in the FT4232H USB TXFIFO for data to be read from the parallel interface pins. This Synchronous Bit-Bang mode will read the data bus parallel I/O pins first, before it transmits data from the USB RxFIFO. It is therefore 1 byte behind the output, and so to read the inputs for the byte that you have just sent, another byte must be sent.

For example:-

(1) Pins start at 0xFF
Send 0x55,0xAA
Pins go to 0x55 and then to 0xAA
Data read = 0xFF,0x55

(2) Pins start at 0xFF
Send 0x55,0xAA,0xAA
(repeat the last byte sent)
Pins go to 0x55 and then to 0xAA

Data read = 0xFF,0x55,0xAA

Synchronous Bit-Bang Mode differs from Asynchronous Bit-Bang mode in that the device parallel output is only read when the parallel output is written to by the USB interface. This makes it easier for the controlling program to measure the response to a USB output stimulus as the data returned to the USB interface is synchronous to the output data.

Asynchronous Bit-Bang mode is enabled using Set Bit Bang Mode driver command. A hex value of 1 will enable Asynchronous Bit-Bang mode.

Synchronous Bit-Bang mode is enabled using Set Bit Bang Mode driver command. A hex value of 4 will enable Synchronous Bit-Bang mode.

See application note AN2232-02, "Bit Mode Functions for the FT2232" for more details and examples of using the bit-bang modes.

An example of the synchronous bi-bang mode timing is shown in Figure 4.7 and Table 4.2.

Copyright © Future Technology Devices International Limited

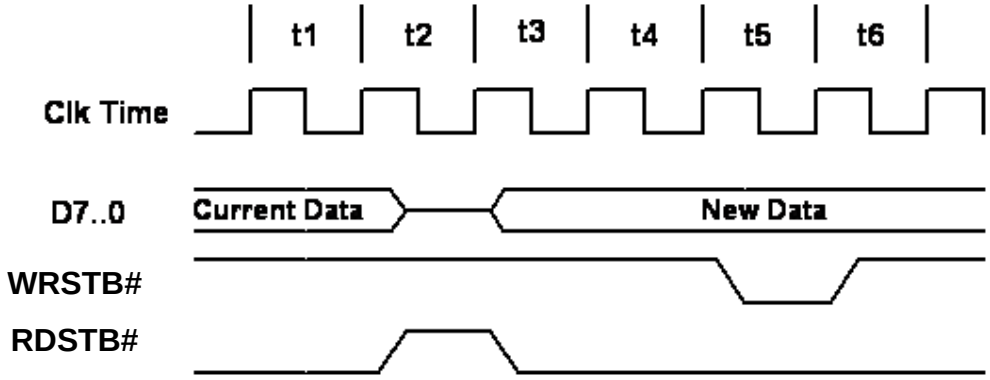

Figure 4.7 Synchronous Bit-Bang Mode Timing Interface Example

It should be noted that the FT4232H does not output the WRSTB# or RDSTB# signals when configured in bit-bang mode. Figure 4.7 and Table 4.2 show these signals for **illustration** purposes only.

NAME	Description
t1	Current pin state is read
t2	RDSTB# is set inactive and data on the paralle I/O pins is read and sent to the USB host.
t3	RDSTB# is set active again, and any pins that are output will change to their new data
t4	1 clock cycle to allow for data setup
t5	WRSTB# goes active. This indicates that the host PC has written new data to the I/O parallel data
t6	WRSTB# goes inactive

Table 4.2 Synchronous Bit-Bang Mode Timing Interface Example Timings

WRSTB# = this output indicates when new data has been written to the I/O pins from the Host PC (via the USB interface).

RDSTB# = this output rising edge indicates when data has been read from the I/O pins and sent to the Host PC (via the USB interface).

4.6 FT4232H Mode Selection

The 4 channels of the FT4232H reset to 4 asynchronous serial UART interfaces. Following a reset, the required mode can be configured by sending the ***FT_SetBitMode*** command (refer to D2XX Programmers Guide) to the USB driver software.

The EEPROM contents have no effect on the selected mode with the exception of selecting the TXDEN for RS485 mode when asynchronous serial interface has been selected in software. If the device is reset, then the 4 channels must be reconfigured into the required mode.

Note that the mode of each of the 4 channels is independent of the other channels.

The MPSSE can be configured directly using the D2XX commands. Refer to D2XX Programmers Guide for more details.

Also the MPSSE command set is fully described in application note AN108 - Command Processor For MPSSE and MCU Host Bus Emulation Modes

Copyright © Future Technology Devices International Limited

5 Devices Characteristics and Ratings

5.1 Absolute Maximum Ratings

The absolute maximum ratings for the FT4232H devices are as follows. These are in accordance with the Absolute Maximum Rating System (IEC 60134). Exceeding these values may cause permanent damage to the device.

Parameter	Value	Unit
Storage Temperature	-65°C to 150°C	Degrees C
Floor Life (Out of Bag) At Factory Ambient (30°C / 60% Relative Humidity)	168 Hours (IPC/JEDEC J-STD-033A MSL Level 3 Compliant)*	Hours
Ambient Operating Temperature (Power Applied)	-40°C to 85°C	Degrees C
MTTF FT4232HL	TBD	hours
MTTF FT4232HQ	TBD	hours
VCORE Supply Voltage	-0.3 to +2.0	V
VCCIO IO Voltage	-0.3 to +4.0	V
DC Input Voltage – USBDP and USBDM	-0.5 to +3.63	V
DC Input Voltage – High Impedance Bi-directional (powered from VCCIO)	-0.3 to +5.8	V
DC Input Voltage – All Other Inputs	-0.5 to + (VCCIO +0.5)	V
DC Output Current – Outputs	16	mA

Table 5.1 Absolute Maximum Ratings

* If devices are stored out of the packaging beyond this time limit the devices should be baked before use. The devices should be ramped up to a temperature of +125°C and baked for up to 17 hours.

5.2 DC Characteristics

DC Characteristics (Ambient Temperature = -40°C to +85°C)

Parameter	Description	Minimum	Typical	Maximum	Units	Conditions
VCORE	VCC Core Operating Supply Voltage	1.62	1.80	1.98	V	
VCCIO*	VCCIO Operating Supply Voltage	2.97	3.30	3.63	V	Cells are 5V tolerant
VREGIN	VREGIN Voltage regulator Input	3.00	3.30	3.60	V	
VREGOUT	Voltage regulator Output	1.71	1.80	1.89	V	
Ireg	Regulator Current			150	mA	VREGIN +3.3V
Icc1	Core Operating Supply Current	---	70	---	mA	VCORE = +1.8V Normal Operation
Icc1r	Core Reset Supply Current	---	5	---	mA	VCORE = +1.8V Device in reset state.
Icc1s	Core Suspend Supply Current		500		µA	VCORE = +1.8V USB Suspend

Table 5.2 Operating Voltage and Current

Note: Failure to connect all VCCIO pins will result in failure of the device.

Copyright © Future Technology Devices International Limited

The I/O pins are +3.3v cells, which are +5V tolerant (except the USB PHY pins).

Parameter	Description	Minimum	Typical	Maximum	Units	Conditions
Voh	Output Voltage High	2.40	3.14		V	Ioh = +/-2mA I/O Drive strength* = 4mA
			3.20		V	I/O Drive strength* = 8mA
			3.22		V	I/O Drive strength* = 12mA
			3.22		V	I/O Drive strength* = 16mA
Vol	Output Voltage Low		0.18	0.40	V	Iol = +/-2mA I/O Drive strength* = 4mA
			0.12		V	I/O Drive strength* = 8mA
			0.08		V	I/O Drive strength* = 12mA
			0.07		V	I/O Drive strength* = 16mA
Vil	Input low Switching Threshold		-	0.80	V	LVTTL
Vih	Input High Switching Threshold	2.0	-		V	LVTTL
Vt	Switching Threshold		1.50		V	LVTTL
Vt-	Schmitt trigger negative going threshold voltage	0.80	1.10	-	V	
Vt+	Schmitt trigger positive going threshold voltage		1.60	2.0	V	
Rpu	Input pull-up resistance	40	75	190	KΩ	Vin = 0
Rpd	Input pull-down resistance	40	75	190	KΩ	Vin =VCCIO
Iin	Input Leakage Current	15	45	85	µA	Vin = 0
Ioz	Tri-state output leakage current		+/-10		µA	Vin = 5.5V or 0

Table 5.3 I/O Pin Characteristics (except USB PHY pins)

*The I/O drive strength and slow slew-rate are configurable in the EEPROM.

DC Characteristics (Ambient Temperature = -40°C to +85°C)

Parameter	Description	Minimum	Typical	Maximum	Units	Conditions
VPHY, VPLL	PHY Operating Supply Voltage	3.0	3.3	3.6	V	3.3V I/O
Iccphy	PHY Operating Supply Current	---	30	60	mA	High-speed operation at 480 MHz
Iccphy (susp)	PHY Operating Supply Current	---	10	50	µA	USB Suspend

Table 5.4 PHY Operating Voltage and Current

Copyright © Future Technology Devices International Limited

Parameter	Description	Minimum	Typical	Maximum	Units	Conditions
Voh	Output Voltage High	VCORE-0.2			V	
Vol	Output Voltage Low			0.2	V	
Vil	Input low Switching Threshold		-	0.8	V	
Vih	Input High Switching Threshold	2.0	-		V	

Table 5.5 PHY I/O Pin Characteristics

5.3 ESD Tolerance

ESD protection for FT4232H IO's

Parameter	Reference	Minimum	Typical	Maximum	Units
Human Body Model (HBM)	JEDEC EIA/JESD22-A114-B, Class 2		±2kV		kV
Machine Mode (MM)	JEDEC EIA/JESD22-A115-A, Class B		±200V		V
Charge Device Model (CDM)	JEDEC EIA/ JESD22-C101-D, Class-III		±500V		V
Latch-up	JESD78, Trigger Class-II		±200mA		mA

Table 5.6 ESD Tolerance

5.4 Thermal Characteristics

Parameter	Minimum	Typical	Maximum	Units
Θ_{JA} (FT4232HL)		37.66		°C/W
Θ_{JC} (FT4232HL)		8.39		°C/W
Θ_{JA} (FT4232HQ)		29.67		°C/W
Θ_{JC} (FT4232HQ)		14.12		°C/W
T_J (FT4232HL/FT4232HQ)	-40	25	125	°C

Table 5.7 Thermal Characteristics

Copyright © Future Technology Devices International Limited

6 FT4232H Configurations

The following sections illustrate possible USB power configurations for the FT4232H.

All USB power configurations illustrated apply to both package options for the FT4232H device.

6.1 USB Bus Powered Configuration

Bus Powered Application example 1: Bus powered configuration

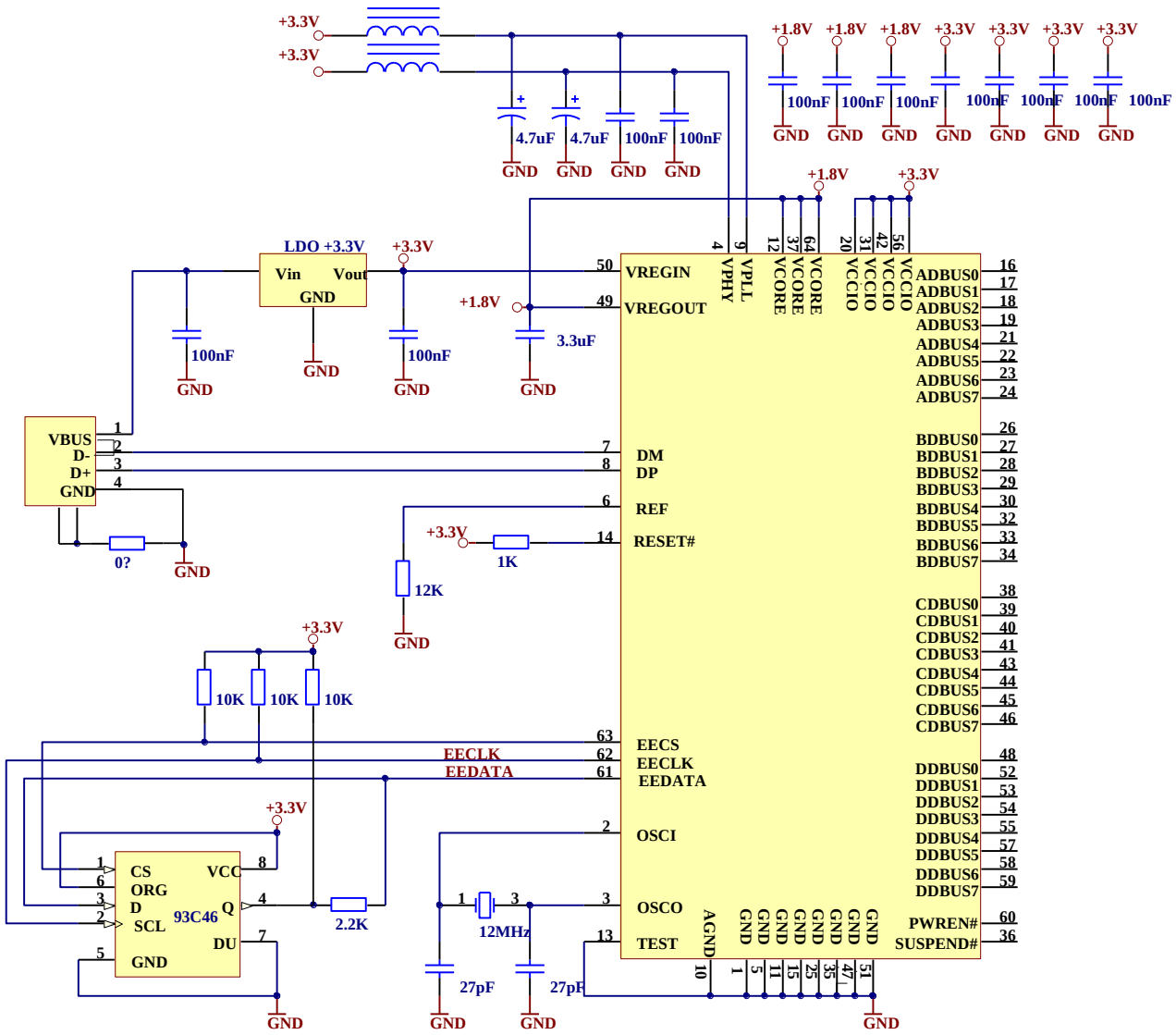

Figure 6.1 Bus Powered Configuration Example 1

Figure 6.1 illustrates the FT4232H in a typical USB bus powered design configuration. A USB bus powered device gets its power from the USB bus. In this application, the FT4232H requires that the VBUS (USB +5V) is regulated down to +3.3V (using an LDO) to supply the VCCIO, VPLL, VPHY and VREGIN.

VREGIN is the +3.3V input to the on chip +1.8V regulator. The output of the on chip LDO regulator (+1.8V) drives the FT4232H core supply (VCORE). This requires a minimum of a 3.3uF filter capacitor.

Bus Powered Application example 2: Bus powered configuration (with additional 1.8V LDO voltage regulator for VCORE).

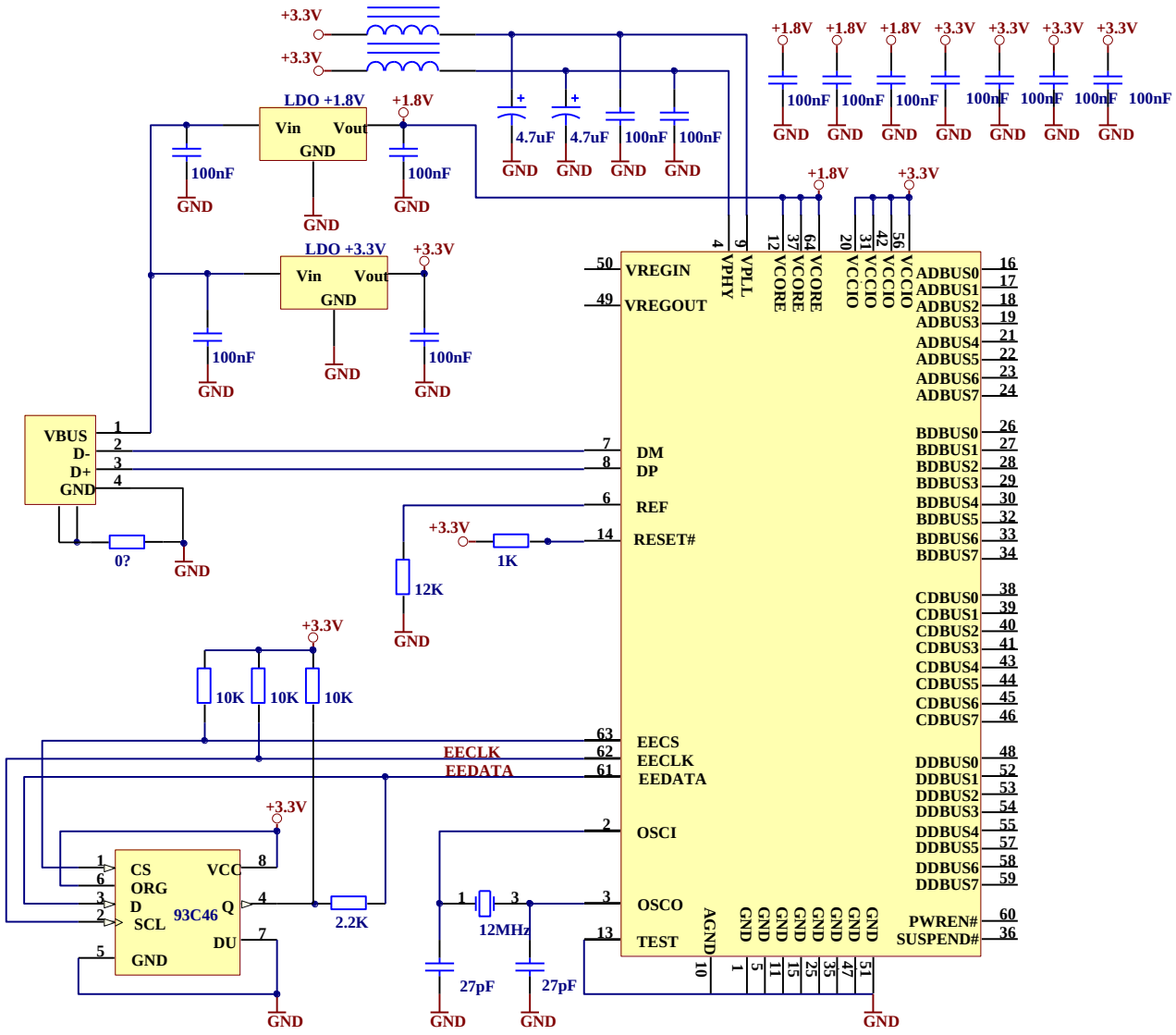

Figure 6.2 Bus Powered Configuration Example 2

Figure 6.2 illustrate the FT4232H in a typical USB bus powered configuration similar to Figure 6.1. The difference here is that the +1.8V for the FT4232H core (VCORE) has been regulated from the VBUS as well as the +3.3V supply to the VPLL, VPHY, VCCIO and VREGIN.

6.2 USB Self Powered Configuration

Self-Powered application example 1: Self-powered configuration

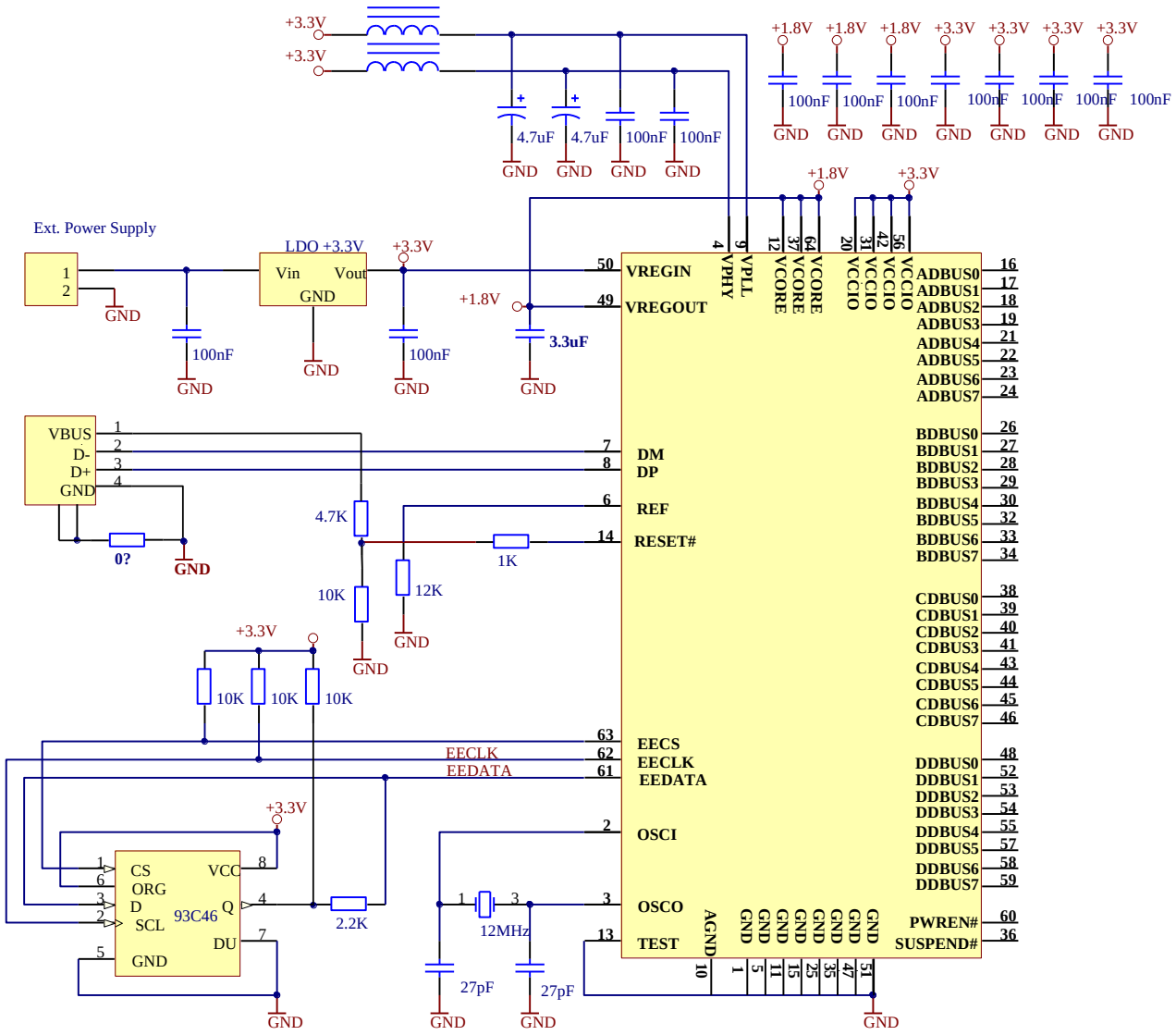

Figure 6.3 Self-Powered Configuration Example 1

Figure 6.3 illustrate the FT4232H in a typical USB self-powered configuration. A USB self-powered device gets its power from its own power supply and does not draw current from the USB bus. In this example an external power supply is used. This external supply is regulated to +3.3V.

Note that in this set-up, the EEPROM should be configured for self-powered operation.

Self-Powered application example 2: Self-powered configuration (with additional 1.8V LDO voltage regulator for VCORE).

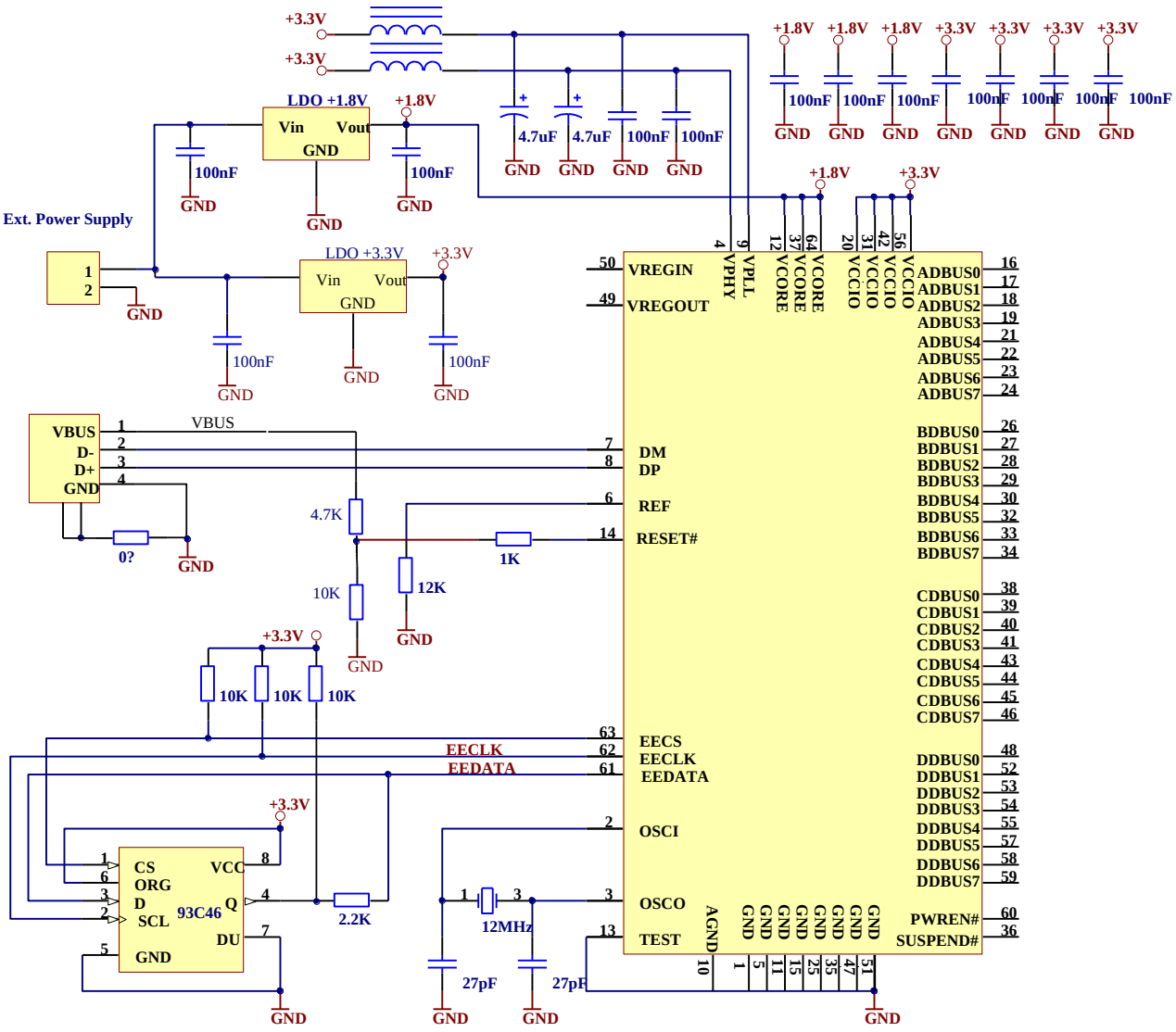

Figure 6.4 Self-Powered Configuration Example 2

Figure 6.4 illustrates the FT4232H in a typical USB self-powered configuration similar to Figure 6.3. The difference here is that the +1.8V for the FT4232H core has been regulated from the external power supply.

Note that in this set-up, the EEPROM should be configured for self-powered operation.

Copyright © Future Technology Devices International Limited

6.3 Oscillator Configuration

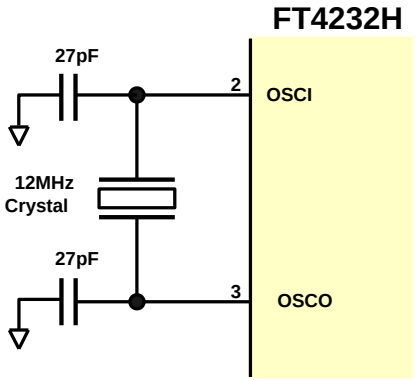

Figure 6.5 Recommended FT4232H Crystal Oscillator Configuration.

Figure 6.5 Illustrates how to connect the FT4232H with a 12MHz ± 0.003% crystal. In this case loading capacitors should to be added between OSCI, OSCO and GND as shown. A value of 27pF is shown as the capacitor in the example – this will be good for many crystals but it is recommended to select the loading capacitor value based on the manufacturer's recommendations wherever possible. It is recommended to use a parallel cut type crystal.

It is also possible to use a 12 MHz oscillator with the FT4232H. In this case the output of the oscillator would drive OSCI, and OSCO should be left unconnected. The oscillator must have a CMOS output drive capability.

Parameter	Description	Minimum	Typical	Maximum	Units	Conditions
OSCI Vin	Input Voltage	2.97	3.30	3.63	V	
FIn	Input Frequency		12		MHz	+/- 30ppm
Ji	Cycle to cycle jitter		< 150		pS	

Table 6.1 OSCI Input characteristics

Copyright © Future Technology Devices International Limited

6.4 4 Channel Transmit and Receiver LED Indication Example

The following example illustrates how a 74HCT595 can be used to decode the EEDATA data to indicate Tx and Rx on each of the channels. The associated LED will light when the Channel is transmitting or receiving data.

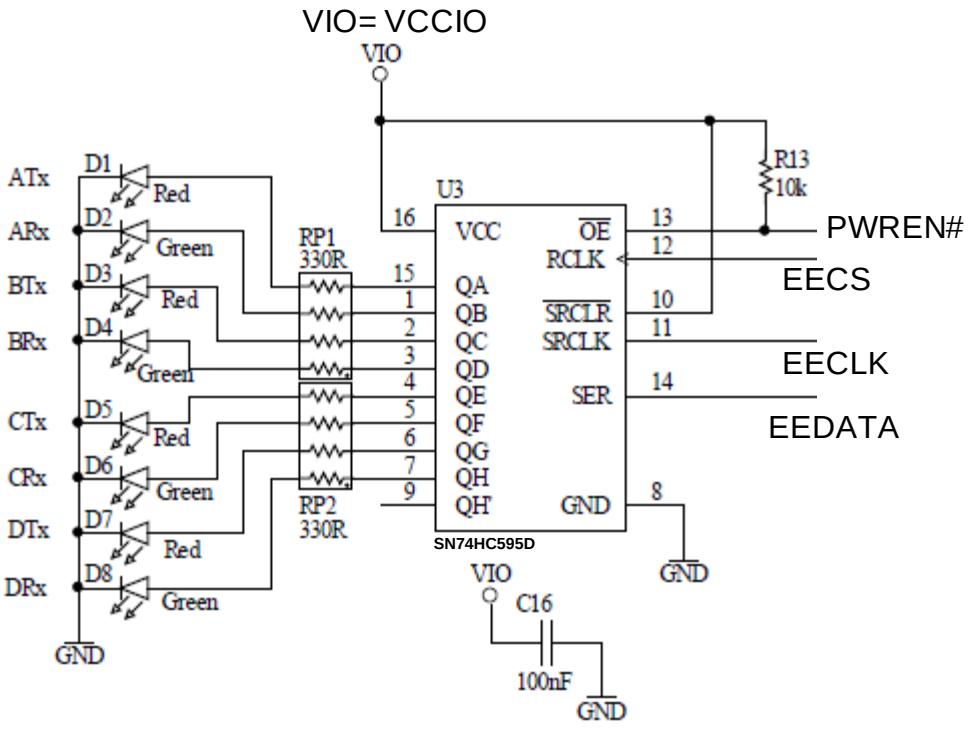

Figure 6.6 Using 74HC595 to Indicate Tx and Rx Data

In this configuration, the LEDs will flash when the EEPROM is accessed e.g. during enumeration.

Under normal operation, the EECS is held low to disable access to the EEPROM. In this special case, the EECLK (frequency = 1.56µS) will clock the EEDATA into the 74HC595 shift register (with EECS low, therefore EEPROM ignores the EEDATA). Then EECS will pulse high. The rising edge of the EECS latches the data into a storage register of the 74HC595 which drives the LEDs.

Please refer to the 74HC595 datasheet for further explanation.

Copyright © Future Technology Devices International Limited

7 EEPROM Configuration

If an external EEPROM is fitted (93LC46/56/66) it can be programmed over USB using FT_PROG. The EEPROM must be 16 bits wide and capable or working at a VCC supply of +3.0 to +3.6 volts.

Adding an external EEPROM allows selecting the TXDEN for RS485 mode when asynchronous serial interface has been selected.

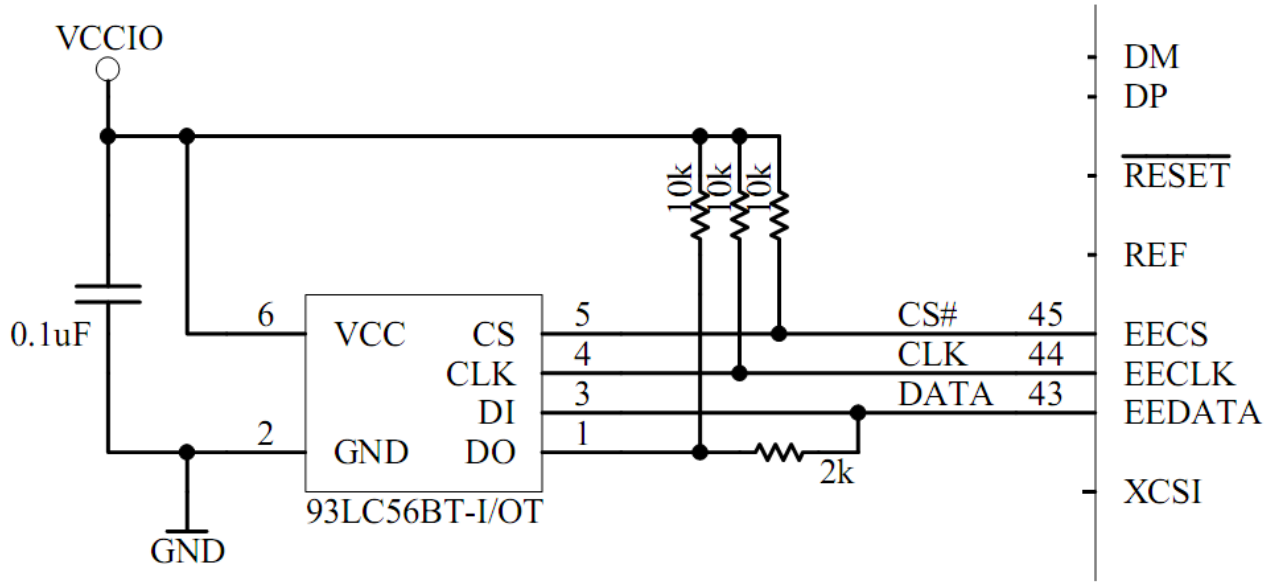

Figure 7.1 EEPROM Interface

The external EEPROM can also be used to customise the USB VID, PID, Serial Number, Product Description Strings and Power Descriptor value of the FT4232H for OEM applications. Other parameters controlled by the EEPROM include Remote Wake Up, Soft Pull Down on Power-Off and I/O pin drive strength.

If no EEPROM is connected (or the EEPROM is blank), the FT4232H uses its built-in default VID (0403), PID (6011) Product Description and Power Descriptor Value. In this case, the device will not have a serial number as part of the USB descriptor.

7.1 Default EEPROM Configuration

The external EEPROM (if it's fitted) can be programmed over USB using FT_PROG. This allows a blank part to be soldered onto the PCB and programmed as part of the manufacturing and test process. Users who do not have their own USB Vendor ID but who would like to use a unique Product ID in their design can apply to FTDI for a free block of unique PIDs.

See TN_100 USB Vendor ID/Product ID Guidelines for more information.

Parameter	Value	Notes
USB Vendor ID (VID)	0403h	FTDI default VID (hex)
USB Product UD (PID)	6011h	FTDI default PID (hex)
bcd Device	0800h	
Serial Number Enabled?	Yes	
Serial Number	None	
Pull down I/O Pins in USB Suspend	Disabled	Enabling this option will make the device pull down on the UART interface lines when in USB suspend mode (PWREN# is high).
Manufacturer Name	FTDI	
Product Description	Quad RS232-HS	
Max Bus Power Current	500mA	

Copyright © Future Technology Devices International Limited

Parameter	Value	Notes
Power Source	Bus Powered	
Device Type	FT4232H	
USB Version	0200h	Returns USB 2.0 device description to the host.
Remote Wake Up	Disabled	Taking RI# low will wake up the USB host controller from suspend in approximately 20 ms. If enabled.
RI RS485	Disabled	Enables TXDEN signal for RS485 buses.
High Current I/Os	Disabled	Enables the high drive level on the UART and ACBUS I/O pins.
Load VCP Driver	Enabled	Makes the device load the VCP driver interface for the device.

Table 7.1 Default Configuration with a blank/no EEPROM

Copyright © Future Technology Devices International Limited

8 Package Parameters

The FT4232H is available in three different packages. The FT4232HL is the LQFP-64 option, the FT4232HQ is the QFN-64 package option and the FT4232H-56Q is the VQFN-56 package option. The solder reflow profile for all packages is described in **Section 8.4.** See TN_166 FTDI Example IC Footprints for PCB footprint guidelines.

8.1 FT4232HQ, QFN-64 Package Dimensions

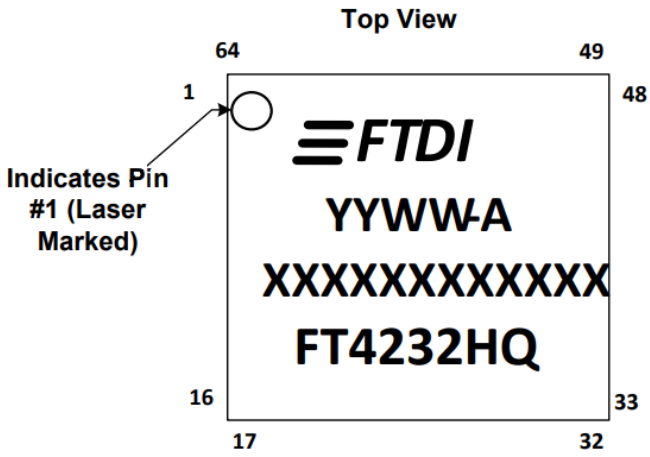

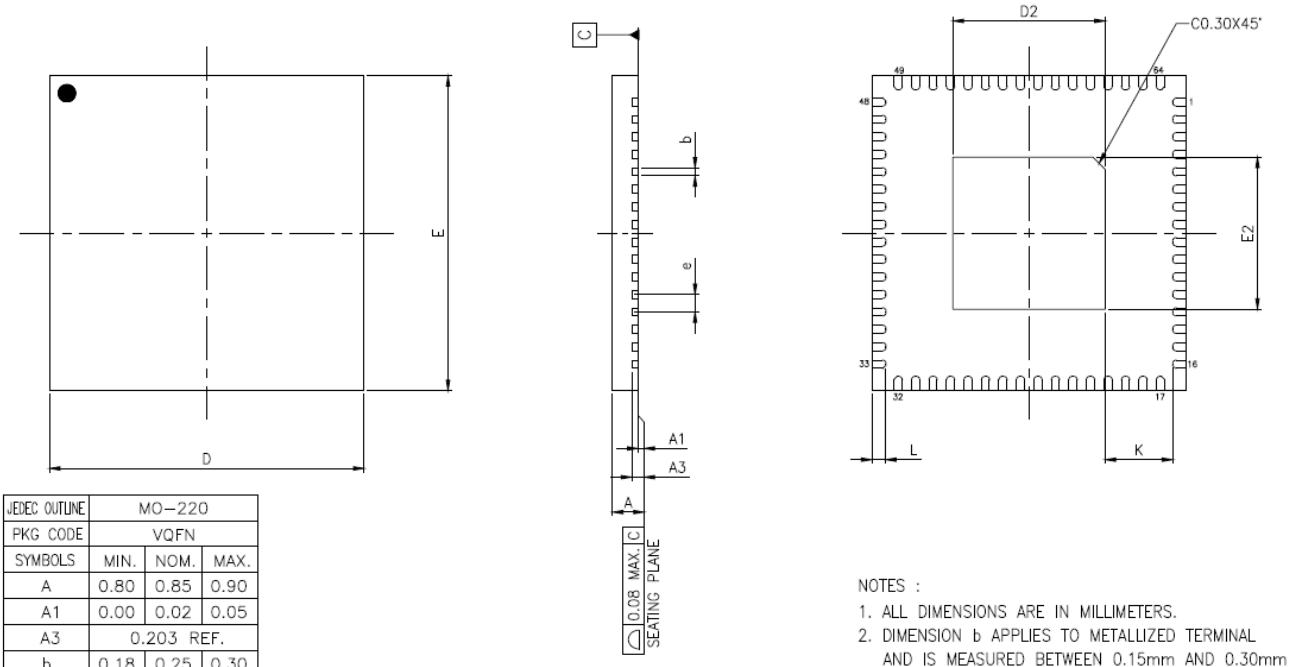

JEDEC OUTLINE	MO-220		
PKG CODE	VQFN		
SYMBOLS	MIN.	NOM.	MAX.
A	0.80	0.85	0.90
A1	0.00	0.02	0.05
A3	0.203 REF.		
b	0.18	0.25	0.30
D	9.00 BSC		
E	9.00 BSC		
e	0.50 BSC		
K	0.20	—	—

PAD SIZE	D2			E2			L			LEAD FINISH		JEDEC CODE
	MIN.	NOM.	MAX.	MIN.	NOM.	MAX.	MIN.	NOM.	MAX.	Pure Tin	PPF	
	4.30	4.35	4.40	4.30	4.35	4.40	0.35	0.40	0.45	V	X	N/A

NOTES :
1. ALL DIMENSIONS ARE IN MILLIMETERS.
2. DIMENSION b APPLIES TO METALLIZED TERMINAL AND IS MEASURED BETWEEN 0.15mm AND 0.30mm FROM THE TERMINAL TIP. IF THE TERMINAL HAS THE OPTIONAL RADIUS ON THE OTHER END OF THE TERMINAL, THE DIMENSION b SHOULD NOT BE MEASURED IN THAT RADIUS AREA.
3. BILATERAL COPLANARITY ZONE APPLIES TO THE EXPOSED HEAT SINK SLUG AS WELL AS THE TERMINALS.

Figure 8.1 64 pin QFN Package Details

Notes:

1. All dimensions are in mm.
2. The bottom side central solder pad must be connected to the ground of the system.

8.2 FT4232HL, LQFP-64 Package Dimensions

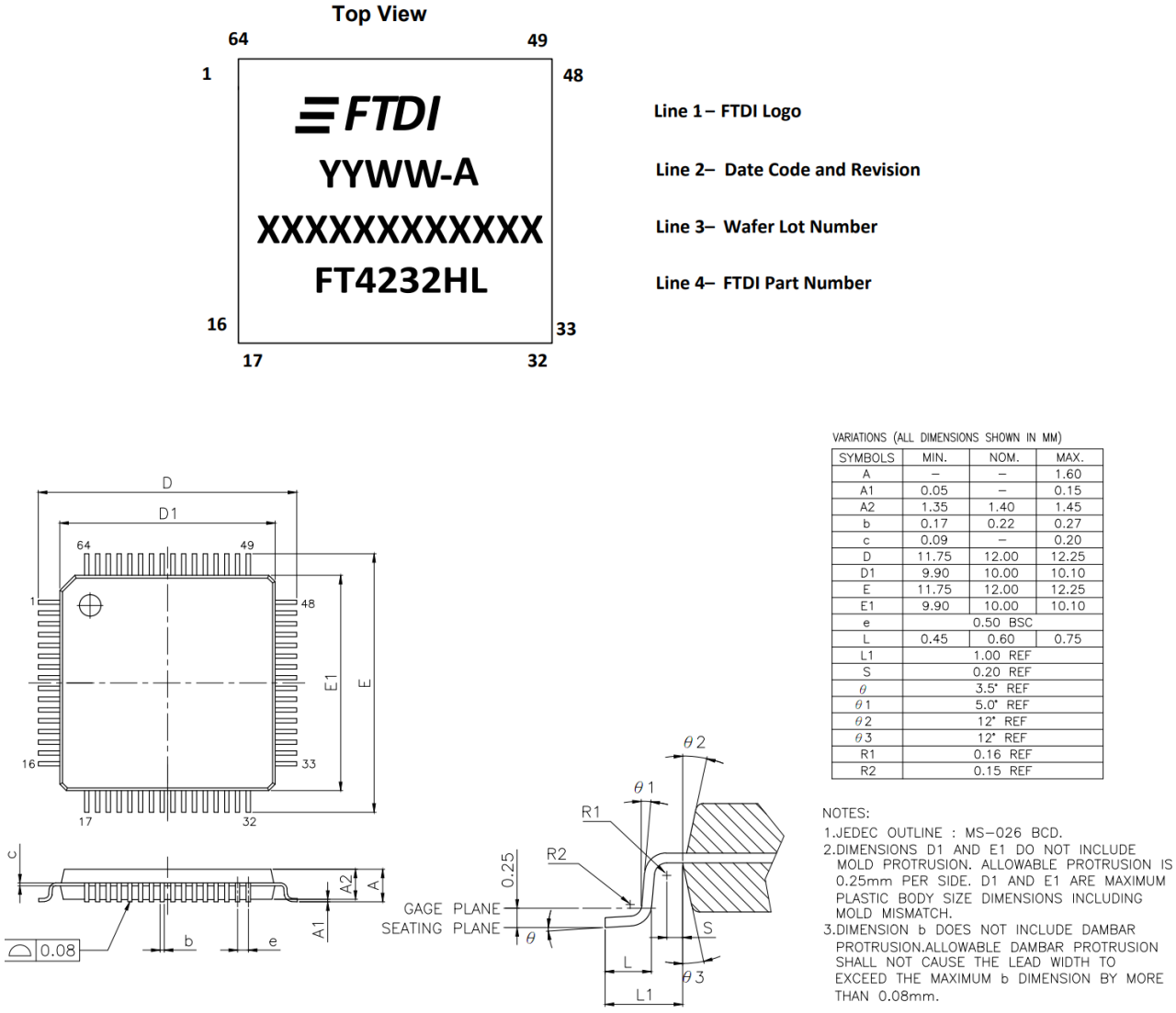

VARIATIONS (ALL DIMENSIONS SHOWN IN MM)

SYMBOLS	MIN.	NOM.	MAX.
A	–	–	1.60
A1	0.05	–	0.15
A2	1.35	1.40	1.45
b	0.17	0.22	0.27
c	0.09	–	0.20
D	11.75	12.00	12.25
D1	9.90	10.00	10.10
E	11.75	12.00	12.25
E1	9.90	10.00	10.10
e		0.50 BSC	
L	0.45	0.60	0.75
L1		1.00 REF	
S		0.20 REF	
θ		3.5° REF	
θ1		5.0° REF	
θ2		12° REF	
θ3		12° REF	
R1		0.16 REF	
R2		0.15 REF	

NOTES:
1.JEDEC OUTLINE : MS–026 BCD.
2.DIMENSIONS D1 AND E1 DO NOT INCLUDE MOLD PROTRUSION. ALLOWABLE PROTRUSION IS 0.25mm PER SIDE. D1 AND E1 ARE MAXIMUM PLASTIC BODY SIZE DIMENSIONS INCLUDING MOLD MISMATCH.
3.DIMENSION b DOES NOT INCLUDE DAMBAR PROTRUSION.ALLOWABLE DAMBAR PROTRUSION SHALL NOT CAUSE THE LEAD WIDTH TO EXCEED THE MAXIMUM b DIMENSION BY MORE THAN 0.08mm.

Figure 8.2 64 pin LQFP Package Details

Copyright © Future Technology Devices International Limited

8.3 FT4232H-56Q, VQFN-56 Package Dimensions

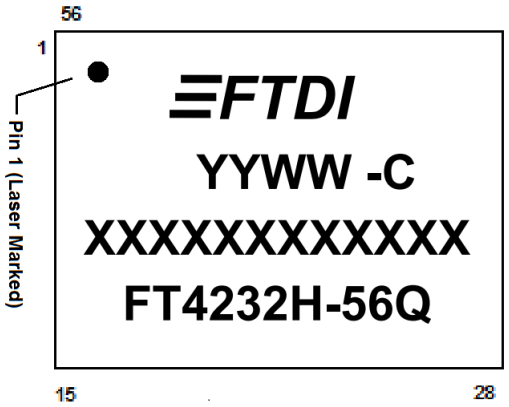

Line 1 – FTDI Logo

Line 2 – Date Code and Revision

Line 3 – Wafer Lot Number

Line 4 – FTDI Part Number

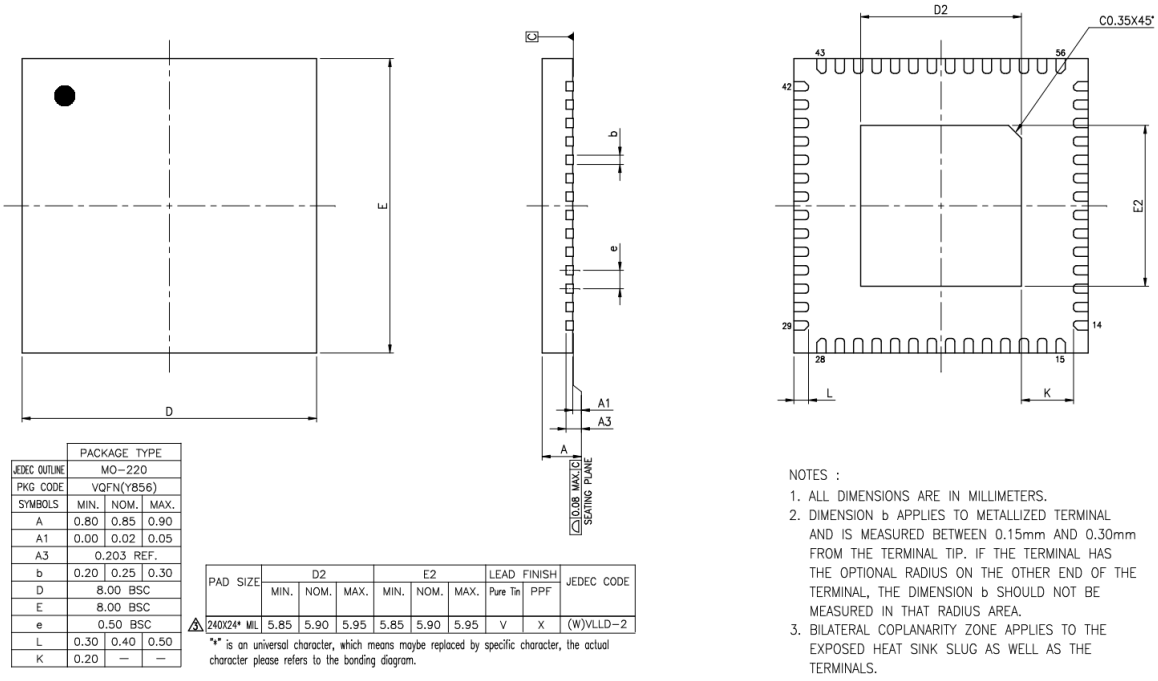

	PACKAGE TYPE		
JEDEC OUTLINE	MO-220		
PKG CODE	VQFN(Y856)		
SYMBOLS	MIN.	NOM.	MAX.
A	0.80	0.85	0.90
A1	0.00	0.02	0.05
A3	0.203 REF.		
b	0.20	0.25	0.30
D	8.00 BSC		
E	8.00 BSC		
e	0.50 BSC		
L	0.30	0.40	0.50
K	0.20	—	—

PAD SIZE	D2			E2			LEAD FINISH		JEDEC CODE
	MIN.	NOM.	MAX.	MIN.	NOM.	MAX.	Pure Tin	PPF	
240X24* MIL	5.85	5.90	5.95	5.85	5.90	5.95	V	X	(W)VLLD-2

"*" is an universal character, which means maybe replaced by specific character, the actual character please refers to the bonding diagram.

NOTES :
1. ALL DIMENSIONS ARE IN MILLIMETERS.
2. DIMENSION b APPLIES TO METALLIZED TERMINAL AND IS MEASURED BETWEEN 0.15mm AND 0.30mm FROM THE TERMINAL TIP. IF THE TERMINAL HAS THE OPTIONAL RADIUS ON THE OTHER END OF THE TERMINAL, THE DIMENSION b SHOULD NOT BE MEASURED IN THAT RADIUS AREA.
3. BILATERAL COPLANARITY ZONE APPLIES TO THE EXPOSED HEAT SINK SLUG AS WELL AS THE TERMINALS.

Figure 8.3 56-pin VQFN Package Details for FT4232H-56Q

Notes:

1. The internal ground of the device is connected to the bottom side central solder pad whose dimension is 5.90 x 5.90mm. This central solder pad must be connected to the ground of the system.

Copyright © Future Technology Devices International Limited

8.4 Solder Reflow Profile

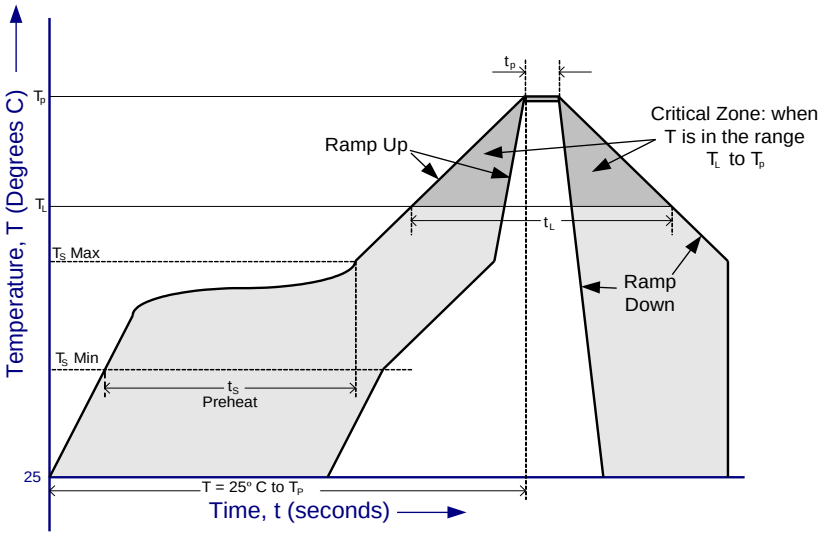

Figure 8.4 FT4232H Solder Reflow Profile

Profile Feature	Pb Free Solder Process (green material)	SnPb Eutectic and Pb free (non green material) Solder Process
Average Ramp Up Rate (T_s to T_p)	3°C / second Max.	3°C / Second Max.
Preheat - Temperature Min (T_s Min.) - Temperature Max (T_s Max.) - Time (t_s Min to t_s Max)	 150°C 200°C 60 to 120 seconds	 100°C 150°C 60 to 120 seconds
Time Maintained Above Critical Temperature T_L: - Temperature (T_L) - Time (t_L)	 217°C 60 to 150 seconds	 183°C 60 to 150 seconds
Peak Temperature (T_p)	260°C	see Table 8.2
Time within 5°C of actual Peak Temperature (t_p)	30 to 40 seconds	20 to 40 seconds
Ramp Down Rate	6°C / second Max.	6°C / second Max.
Time for T= 25°C to Peak Temperature, T_p	8 minutes Max.	6 minutes Max.

Table 8.1 Reflow Profile Parameter Values

SnPb Eutectic and Pb free (non green material)		
Package Thickness	Volume mm3 < 350	Volume mm3 >=350
< 2.5 mm	235 +5/-0 deg C	220 +5/-0 deg C
≥ 2.5 mm	220 +5/-0 deg C	220 +5/-0 deg C
Pb Free (green material) = 260 +5/-0 deg C		

Table 8.2 Package Reflow Peak Temperature

Copyright © Future Technology Devices International Limited

9 Contact Information

Head Office – Glasgow, UK

Future Technology Devices International Limited
Unit 1, 2 Seaward Place, Centurion Business Park
Glasgow G41 1HH
United Kingdom
Tel: +44 (0) 141 429 2777
Fax: +44 (0) 141 429 2758

E-mail (Sales) sales1@ftdichip.com
E-mail (Support) support1@ftdichip.com
E-mail (General Enquiries) admin1@ftdichip.com

Branch Office – Tigard, Oregon, USA

Future Technology Devices International Limited (USA)
7130 SW Fir Loop
Tigard, OR 97223-8160
USA
Tel: +1 (503) 547 0988
Fax: +1 (503) 547 0987

E-mail (Sales) us.sales@ftdichip.com
E-mail (Support) us.support@ftdichip.com
E-mail (General Enquiries) us.admin@ftdichip.com

Branch Office – Taipei, Taiwan

Future Technology Devices International Limited (Taiwan)
2F, No. 516, Sec. 1, NeiHu Road
Taipei 114
Taiwan, R.O.C.
Tel: +886 (0) 2 8797 1330
Fax: +886 (0) 2 8751 9737

E-mail (Sales) tw.sales1@ftdichip.com
E-mail (Support) tw.support1@ftdichip.com
E-mail (General Enquiries) tw.admin1@ftdichip.com

Branch Office – Shanghai, China

Future Technology Devices International Limited (China)
Room 1103, No. 666 West Huaihai Road,
Shanghai, 200052
China
Tel: +86 21 62351596
Fax: +86 21 62351595

E-mail (Sales) cn.sales@ftdichip.com
E-mail (Support) cn.support@ftdichip.com
E-mail (General Enquiries) cn.admin@ftdichip.com

Web Site

http://ftdichip.com

Distributor and Sales Representatives

Please visit the Sales Network page of the FTDI Web site for the contact details of our distributor(s) and sales representative(s) in your country.

System and equipment manufacturers and designers are responsible to ensure that their systems, and any Future Technology Devices International Ltd (FTDI) devices incorporated in their systems, meet all applicable safety, regulatory and system-level performance requirements. All application-related information in this document (including application descriptions, suggested FTDI devices and other materials) is provided for reference only. While FTDI has taken care to assure it is accurate, this information is subject to customer confirmation, and FTDI disclaims all liability for system designs and for any applications assistance provided by FTDI. Use of FTDI devices in life support and/or safety applications is entirely at the user's risk, and the user agrees to defend, indemnify and hold harmless FTDI from any and all damages, claims, suits or expense resulting from such use. This document is subject to change without notice. No freedom to use patents or other intellectual property rights is implied by the publication of this document. Neither the whole nor any part of the information contained in, or the product described in this document, may be adapted or reproduced in any material or electronic form without the prior written consent of the copyright holder. Future Technology Devices International Ltd, Unit 1, 2 Seaward Place, Centurion Business Park, Glasgow G41 1HH, United Kingdom. Scotland Registered Company Number: SC136640

Appendix A – References

Document References

AN_113, "Interfacing FT2232H Hi-Speed Devices To I2C Bus

AN_109 – "Programming Guide for High Speed FTCI2C DLL"

AN_110 – "Programming Guide for High Speed FTCJTAG DLL

AN_111 – "Programming Guide for High Speed FTCSPI DLL

AN 113 – "Interfacing FT2232H Hi-Speed Devices To I2C Bus

AN114 – "Interfacing FT2232H Hi-Speed Devices To SPI Bus

AN135 – MPSSE Basics

AN108 - Command Processor For MPSSE and MCU Host Bus Emulation Modes

TN_104, "Guide to Debugging Customers Failed Driver Installation

TN_100 USB Vendor ID/Product ID Guidelines

TN_166 FTDI Example IC Footprints

AN2232-02, "Bit Mode Functions for the FT2232

74HC595 datasheet

FT_PROG EEPROM Programming Utility

Acronyms and Abbreviations

Terms	Description
CDM	Charge Device Model
CMOS	Complementary Metal Oxide Semiconductor
ESD	Electrostatic Discharge
EHCI	Extensible Host Controller Interface
EEPROM	Electrically Erasable Programmable Read-Only Memory
FIFO	First In First Out
FPGA	Field-Programmable Gate Array
HBM	Human Body Model
IC	Integrated Circuit
I²C	Inter Integrated Circuit
JTAG	Joint Test Action Group
LDO	Low Drop Out
LED	Light Emitting Diode

Copyright © Future Technology Devices International Limited

LQFP	Low profile Quad Flat Package
MM	Machine Mode
MCU	Microcontroller Unit
MPSSE	Multi-Protocol Synchronous Serial Engine
OHCI	Open Host Controller Interface
PLD	Programmable Logic Device
QFN	Quad Flat No-Lead
SPI	Serial Peripheral Interface
USB	Universal Serial Bus
UART	Universal Asynchronous Receiver/Transmitter
UHCI	Universal Host Controller Interface
UTMI	Universal Transceiver Macrocell Interface
VCP	Virtual COM Ports
VQFN	Very Thin Quad Flat Non-Leaded Package

Copyright © Future Technology Devices International Limited

Appendix B - List of Figures and Tables

List of Tables

Table 3.1 FT4232H Pin Configurations for 64-pin QFN and LQFP package 9
Table 3.2 Power and Ground for 64-pin QFN and LQFP package 9
Table 3.3 Common Function pins for 64-pin QFN and LQFP Package 9
Table 3.4 EEPROM Interface Group for 64-pin QFN and LQFP Package 10
Table 3.5 Channel A, B, C and D Asynchronous Serial Interface Configured Pin Descriptions 10
Table 3.6 Channel A, B, C & D Synchronous/Asynchronous Bit-Bang Configured Pin Descriptions 11
Table 3.7 Channel A and Channel B MPSSE Configured Pin Descriptions 11
Table 3.8 FT4232H Pin Configurations for 56-Pin VQFN Package 13
Table 3.9 Power and Ground for 56-pin VQFN package 14
Table 3.10 Common Function pins for 56-pin VQFN Package 14
Table 3.11 EEPROM Interface Group for 56-pin VQFN Package 14
Table 3.12 Channel A, B, C & D Asynchronous Serial Interface Configured Pin Desc. for FT4232H-56Q 15
Table 3.13 Channel A, B, C & D Synchronous/Asynchronous Bit-Bang Configured Pin Desc. for FT4232H-56Q 16
Table 3.14 Channel A and Channel B MPSSE Configured Pin Descriptions for FT4232H-56Q 16
Table 4.1 MPSSE Signal Timings 21
Table 4.2 Synchronous Bit-Bang Mode Timing Interface Example Timings 24
Table 5.1 Absolute Maximum Ratings 25
Table 5.2 Operating Voltage and Current 25
Table 5.3 I/O Pin Characteristics (except USB PHY pins) 26
Table 5.4 PHY Operating Voltage and Current 26
Table 5.5 PHY I/O Pin Characteristics 27
Table 5.6 ESD Tolerance 27
Table 5.7 Thermal Characteristics 27
Table 6.1 OSCI Input characteristics 32
Table 7.1 Default Configuration with a blank/no EEPROM 35
Table 8.2 Reflow Profile Parameter Values 39
Table 8.3 Package Reflow Peak Temperature 39

List of Figures

Figure 2.1 FT4232H Block Diagram 4
Figure 3.1 FT4232HL and FT4232HQ Schematic Symbol 7
Figure 3.2 FT4232H-56Q Schematic Symbol 12
Figure 4.1 RS232 Configuration 19
Figure 4.2 Dual RS422 Configurations 19
Figure 4.3 Dual RS485 Configurations 20
Figure 4.4 MPSSE Signal Waveforms 21

Copyright © Future Technology Devices International Limited

Figure 4.5 Adaptive Clocking Interconnect 22
Figure 4.6: Adaptive Clocking waveform 22
Figure 4.7 Synchronous Bit-Bang Mode Timing Interface Example 24
Figure 6.1 Bus Powered Configuration Example 1 28
Figure 6.2 Bus Powered Configuration Example 2 29
Figure 6.3 Self-Powered Configuration Example 1 30
Figure 6.4 Self-Powered Configuration Example 2 31
Figure 6.5 Recommended FT4232H Crystal Oscillator Configuration. 32
Figure 6.6 Using 74HC595 to Indicate Tx and Rx Data 33
Figure 7.1 EEPROM Interface 34
Figure 8.1 64 pin QFN Package Details 36
Figure 8.2 64 pin LQFP Package Details 37
Figure 8.3 56-pin VQFN Package Details for FT4232H-56Q 38
Figure 8.4 FT4232H Solder Reflow Profile 39

Copyright © Future Technology Devices International Limited

Appendix C - Revision History

Document Title: FT4232H QUAD HIGH SPEED USB TO MULTIPURPOSE UART/MPSSE IC Datasheet

Document Reference No.: FT_000060

Clearance No.: FTDI#78

Product Page: http://www.ftdichip.com/FTProducts.htm

Document Feedback: Send Feedback

Revision	Changes	Date
1.0	Initial Release	2008-11-04
2.0	Revised Release	2009-01-05
2.01	Updated description for bit-bang mode	2009-02-05
2.02	Corrected QFN Tray Numbers from 160 to 260 per tray	2009-03-10
2.03	Corrected signal names in Fig2.1; Added reference to AN_109, AN_110, AN_111 & AN_113; Corrected default of RI#/TXDEN in Table 3.1	2009-05-19
2.04	Added latency timer description to Section 4.1	2009-06-03
2.05	Corrected Figures 6.2, 6.3 and 6.4 – missing regulators and better way of holding self-powered designs in reset if not connected to USB; Corrected Max DC inputs on "DC Input Voltage – "All Other Inputs" pins from VCORE+0.5V to VCCIO+0.5V	2009-09-21
2.06	Added description for MPSSE Adaptive Clocking (Section 4.4.1); Corrected 12MHz crystal specification	2009-10-21
2.07	Corrected Section 4.2 – EEPROM description	2009-12-18
2.08	Added TID number (Section 1.3); Added ESD specifications	2010-05-24
2.09	Added USB certified Logo in Section 1.3; Clarified unsupported baud rates of 7,9,10 and 11 Mbaud; Added clarifications about Wake up in Section 3.4.1; Replaced 74HCT595 with 74HC595 in Section 6.4; Edited Fig 4.1 (removed TXLED & RXLED references)	2010-09-02
2.10	Edited Section 4.3.2, 4.3.3 / Fig 4.2 & 4.3	2010-11-17
2.11	Updated Installation guide/App Notes & Technical Notes links	2012-01-09
2.2	Updated Fig 4.1; Added feedback links	2012-02-11
2.3	Updated information for new package 56-pin VQFN	2016-04-04
2.4	Added section Default EEPROM Configuration	2016-06-03
2.5	Added section 5.4 Thermal Characteristics based on customer enquiry. Taken from FT2232H Datasheet. These characteristics are the same for each device. No information on FT4232H-56Q.	2017-11-07
2.6	Updated the following pictures – Figure 8.1, 8.2 and 8.3; Removed table 8.1 (as is now part of the figure); Updated the notes under fig.8.1; Updated the notes under fig.8.3	2019-05-27

Copyright © Future Technology Devices International Limited