Future Technology Devices International Ltd.

FT4232H Mini Module

USB Hi-Speed FT4232H Evaluation Module

Datasheet

Document Reference No.: FT_000115

Version 1.8

Issue Date: 2012-08-01

Future Technology Devices International Ltd (FTDI)

Unit 1, 2 Seaward Place, Centurion Business Park, Glasgow, G41 1HH, United Kingdom

Tel.: +44 (0) 141 429 2777 Fax: + 44 (0) 141 429 2758

E-Mail (Support): support1@ftdichip.com Web: http://www.ftdichip.com

Neither the whole nor any part of the information contained in, or the product described in this manual, may be adapted or reproduced in any material or electronic form without the prior written consent of the copyright holder. This product and its documentation are supplied on an as-is basis and no warranty as to their suitability for any particular purpose is either made or implied. Future Technology Devices International Ltd will not accept any claim for damages howsoever arising as a result of use or failure of this product. Your statutory rights are not affected. This product or any variant of it is not intended for use in any medical appliance, device or system in which the failure of the product might reasonably be expected to result in personal injury. This document provides preliminary information that may be subject to change without notice. No freedom to use patents or other intellectual property rights is implied by the publication of this document. Future Technology Devices International Ltd, Unit 1, 2 Seaward Place, Centurion Business Park, Glasgow, G41 1HH, United Kingdom. Scotland Registered Number: SC136640

Copyright © 2012 Future Technology Devices International Limited

1 Introduction

The FT4232H Mini Module is a USB-serial/FIFO development module in the FTDI product range which utilizes the FT4232H USB Hi-Speed four-port bridge chip which handles all the USB signalling and protocols. It is ideal for development purposes to quickly prove functionality of adding USB to a target design. The FT4232H datasheet, **DS_FT4232H**, is available at **http://www.ftdichip.com**,



Figure 1.1 - FT4232H Mini Module

The FT4232H on the Mini Module is FTDI's 5th generation of USB devices. The FT4232H is a USB 2.0 High Speed (480Mb/s) to UART/MPSSE IC. The device features four interfaces that can be configured for asynchronous or synchronous serial or parallel FIFO interfaces. Two of these have an option to independently configure an MPSSE engine. This allows the FT4232H to operate as two UART/Bit-Bang ports plus two MPSSE engines used to emulate JTAG, SPI, I^2C, Bit-bang or other synchronous serial modes. All components used, including the FT4232H are Pb-free (RoHS compliant).

The FT4232H Mini Module connects the signals of the FT4232H IC to two 26-pin dual-row headers which allow easy connection PCB header sockets and ribbon cables.

The FT4232H Mini Module requires USB device drivers, available free from **http://www.ftdichip.com**, which are used to make the FT4232H on the Mini Module appear as a four virtual COM ports (VCP). This then allows the user to communicate with the USB interface via a standard PC serial emulation port (TTY). Another FTDI USB driver, the D2XX driver, can also be used with application software to directly access the FT4232H on the Mini Module though a DLL. This is illustrated in the Figure 1.2

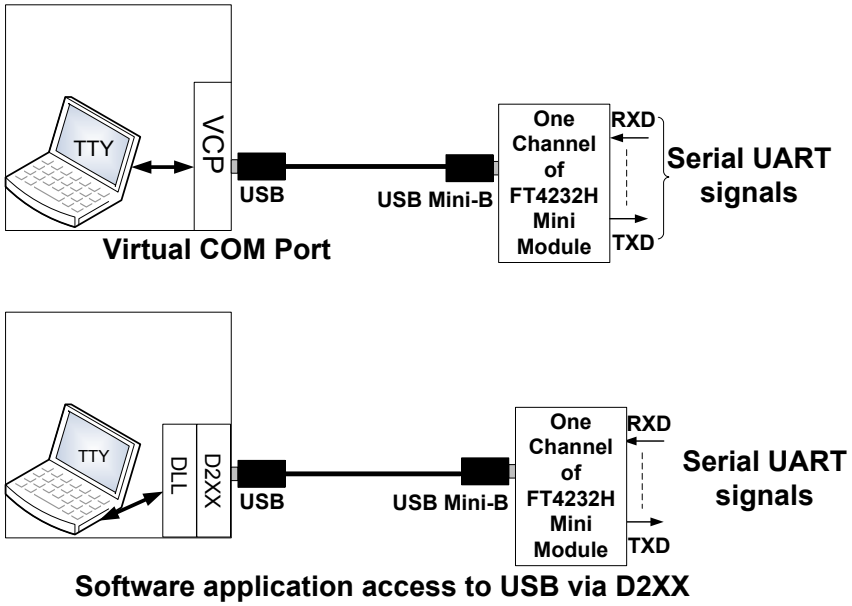

Figure 1.2 Using the FT4232H Mini Module

Device Drivers for the FT4232H Mini Module are available free from **http://www.ftdichip.com**.

Copyright © 2012 Future Technology Devices International Limited

1.1 USB Compliant

The FT4232H Mini Modules are fully compliant with the USB 2.0 specification.



Copyright © 2012 Future Technology Devices International Limited

Table of Contents

1 Introduction 1
1.1 USB Compliant 2
2 Typical Applications 4
2.1 Driver Support 4
2.2 Features 4
3 Electrical Details 5
4 Mechanical details 8
5 Schematic Diagram 9
6 Contact Information 10
Appendix A – FT4232H EEPROM Configuration 10
Appendix B – Revision History 11

Copyright © 2012 Future Technology Devices International Limited

2 Typical Applications

- Rapid USB integration into existing electronic systems.
- Prototyping platform for USB interface on new systems.
- USB to muli-port JTAG, SPI and I^2C interfaces (Two Multi-Protocol Synchronous Serial Engines – MPSSE – available with the FT4232H)
- USB to multi-port asynchronous serial interfaces (up to 4 ports available).
- Four independent ports available, two of which may be configured for MPSSE mode.

2.1 Driver Support

Royalty free VIRTUAL COM PORT (VCP) DRIVERS for…

- Windows 2000, Server 2003, XP Server 2008
- Windows XP and XP 64-bit
- Windows Vista and Vista 64-bit
- Windows XP Embedded
- Windows CE 4.2, 5.0, 5.2 and 6.0
- Mac OS-X
- Linux (2.6.9 or later)

Royalty free D2XX *Direct* Drivers (USB Drivers + DLL S/W Interface)

- Windows 2000, Server 2003, Server 2008
- Windows XP and XP 64-bit
- Windows Vista and Vista 64-bit
- Windows XP Embedded
- Windows CE 4.2, 5.0, 5.2 and 6.0
- Linux (2.4 or later) and Linux x86_64

The drivers listed above are all available to download for free from **www.ftdichip.com**. Various 3rd Party Drivers are also available for various other operating systems - see **www.ftdichip.com** for details.

2.2 Features

The FT4232H Mini Module has the following feature:

- USB 2.0 Hi-Speed compatible
- Reduced development time
- Rapid integration into existing systems
- USB powered – no external power supply needed
- Based on the USB Hi-Speed FT4232H device
- Entire USB protocol handled by USB module
- Small USB Type B connector common on many commercial devices
- Asynchronous Serial data transfer rates from 300 baud to 12 Mbaud at TTL levels
- Synchronous Serial (MPSSE) data rates of up to 30Mbps on JTAG, SPI and I^2C
- Support for USB suspend and resume
- UHCI / OHCI / EHCI host controller compatible
- -40°C to +85°C operating temperature range

Copyright © 2012 Future Technology Devices International Limited

3 Electrical Details

The electrical details and connections to the FT4232H Mini Module are shown in Figure 3.1 and tables 3.1 and 3.2.

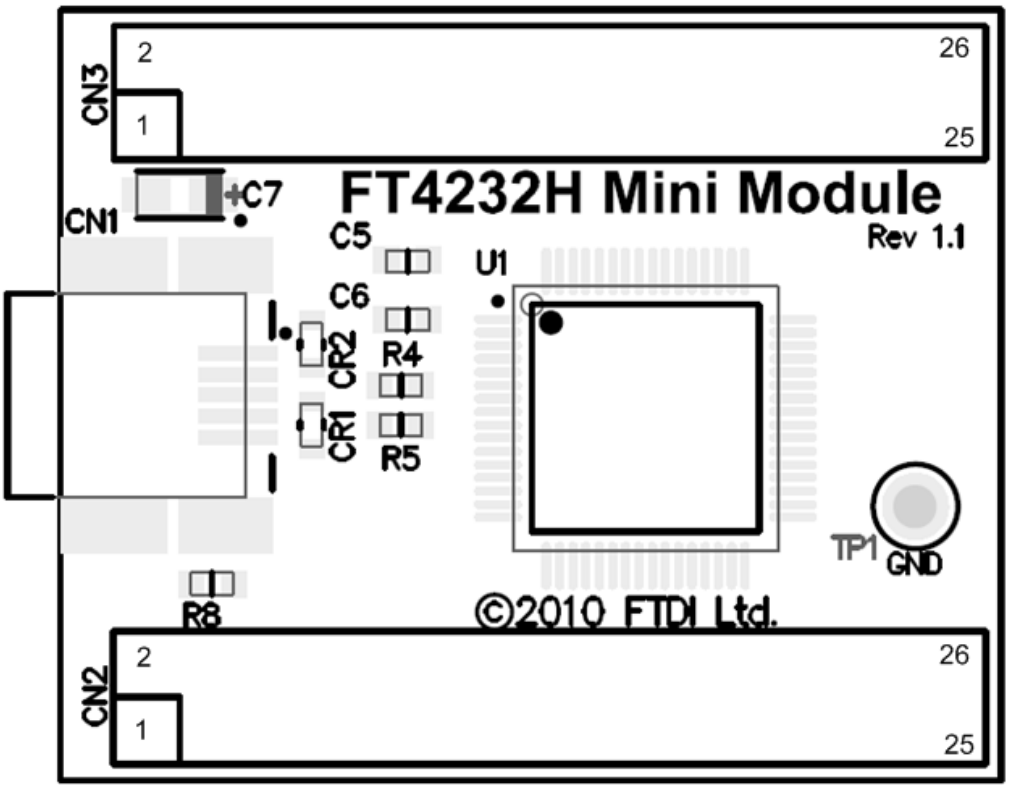

Figure 3.1 FT4232H Mini Module Electrical Connections (Top View)

Connector Pin	Name	Description
CN2-1	V3V3	3.3VDC generated from VCC (output)
CN2-2	GND	0V Power pin
CN2-3	V3V3	3.3VDC generated from VCC (output)
CN2-4	GND	0V Power pin
CN2-5	V3V3	3.3VDC generated from VCC (output)
CN2-6	GND	0V Power pin
CN2-7	AD0	FT4232H AD0 pin
CN2-8	RESET#	FT4232H RESET# pin
CN2-9	AD2	FT4232H AD2 pin
CN2-10	AD1	FT4232H AD1 pin
CN2-11	VIO	Connected to all FT4232H VCCIO pins (input)
CN2-12	AD3	FT4232H AD3 pin
CN2-13	AD5	FT4232H AD5 pin

Copyright © 2012 Future Technology Devices International Limited

CN2-14	AD4	FT4232H AD4 pin
CN2-15	AD7	FT4232H AD7 pin
CN2-16	AD6	FT4232H AD6 pin
CN2-17	BD1	FT4232H BD1 pin
CN2-18	BD0	FT4232H BD0 pin
CN2-19	BD3	FT4232H BD3pin
CN2-20	BD2	FT4232H BD2 pin
CN2-21	VIO	Connected to all FT4232H VCCIO pins (input)
CN2-22	BD4	FT4232H BD4 pin
CN2-23	BD6	FT4232H BD6 pin
CN2-24	BD5	FT4232H BD5 pin
CN2-25	SUSPEND#	FT4232H SUSPEND# pin
CN2-26	BD7	FT4232H BD7 pin

Table 3.1 FT4232H Mini Module Connection – CN2

Connector Pin	Name	Description
CN3-1	VBUS	USB VBUS power pin (output)
CN3-2	GND	0V Power pin
CN3-3	VCC	+5V Power pin (input) used to generate V3V3, VPLL and VUSB
CN3-4	GND	0V Power pin
CN3-5	CS	FT4232H EECS pin
CN3-6	CLK	FT4232H EECLK pin
CN3-7	DATA	FT4232H EEDATA pin
CN3-8	PWREN#	FT4232H PWREN#
CN3-9	DD7	FT4232H DD7 pin
CN3-10	DD6	FT4232H DD6 pin
CN3-11	DD5	FT4232H DD5 pin
CN3-12	VIO	Connected to all FT4232H VCCIO pins (input)
CN3-13	DD4	FT4232H DD4 pin
CN3-14	DD3	FT4232H DD3 pin

Copyright © 2012 Future Technology Devices International Limited

CN3-15	DD2	FT4232H DD2 pin
CN3-16	DD1	FT4232H DD1 pin
CN3-17	DD0	FT4232H DD0 pin
CN3-18	CD7	FT4232H CD7 pin
CN3-19	CD6	FT4232H CD6 pin
CN3-20	CD5	FT4232H CD5 pin
CN3-21	CD4	FT4232H CD4 pin
CN3-22	VIO	Connected to all FT4232H VCCIO pins (input)
CN3-23	CD3	FT4232H CD3 pin
CN3-24	CD2	FT4232H CD2 pin
CN3-25	CD1	FT4232H CD1 pin
CN3-26	CD0	FT4232H CD0 pin

Table 3.2 FT4232H Mini Module Connection – CN3

In most cases, the FT4232H pin is connected directly to the associated pin on CN2 or CN3.

The FT4232H Mini Module allows configuration with both USB Bus-powered designs and USB Self-powered designs:

USB Bus-powered:

1) **Connect VBUS to VCC (CN3, pin 1 to CN3, pin 3).** This connection takes the power from the USB bus (VBUS) and connects it to the voltage regulator input on the FT4232H Mini Module. The voltage regulator, in turn, provides V3V3, VPLL and VUSB power inputs to the FT4232H chip.
2) **Connect V3V3 to VIO (CN2, pins 1, 3 & 5 to CN2, pins 11 & 21 and CN3, pins 12 & 22).** This connection provides the correct 3.3VDC operating voltage for VCCIO on the FT4232H chip.

USB Self-Powered:

1) **Leave VBUS (CN3, pin 1) unconnected.**
2) **Connect an external 5.0VDC power supply to VCC (5.0VDC to CN3, pin 3).** This connection takes provides power from an external power supply and connects it to the voltage regulator input on the FT4232H Mini Module. See the FT4232H data sheet for allowable VCC input voltage ranges.
3) **Connect V3V3 to VIO (CN2, pins 1, 3 & 5 to CN2, pins 11 & 21 and CN3, pins 12 & 22).** This connection provides the correct 3.3VDC operating voltage for VCCIO on the FT4232H chip.
4) **Use MPROG to change the USB power descriptor to "Self-Powered".** This setting indicates to the host system that the USB Host port does not need to supply power to the device. MPROG is a utility provided by FTDI to program various features of the FT-series USB client ICs. In order to access settings for the FT4232H, MPROG, version 3.5 or later is required. MPROG is available through the Utilities section of the FTDI web site.

Copyright © 2012 Future Technology Devices International Limited

4 Mechanical details

The mechanical details of the FT4232H Mini Module are shown in Figure 4.1:

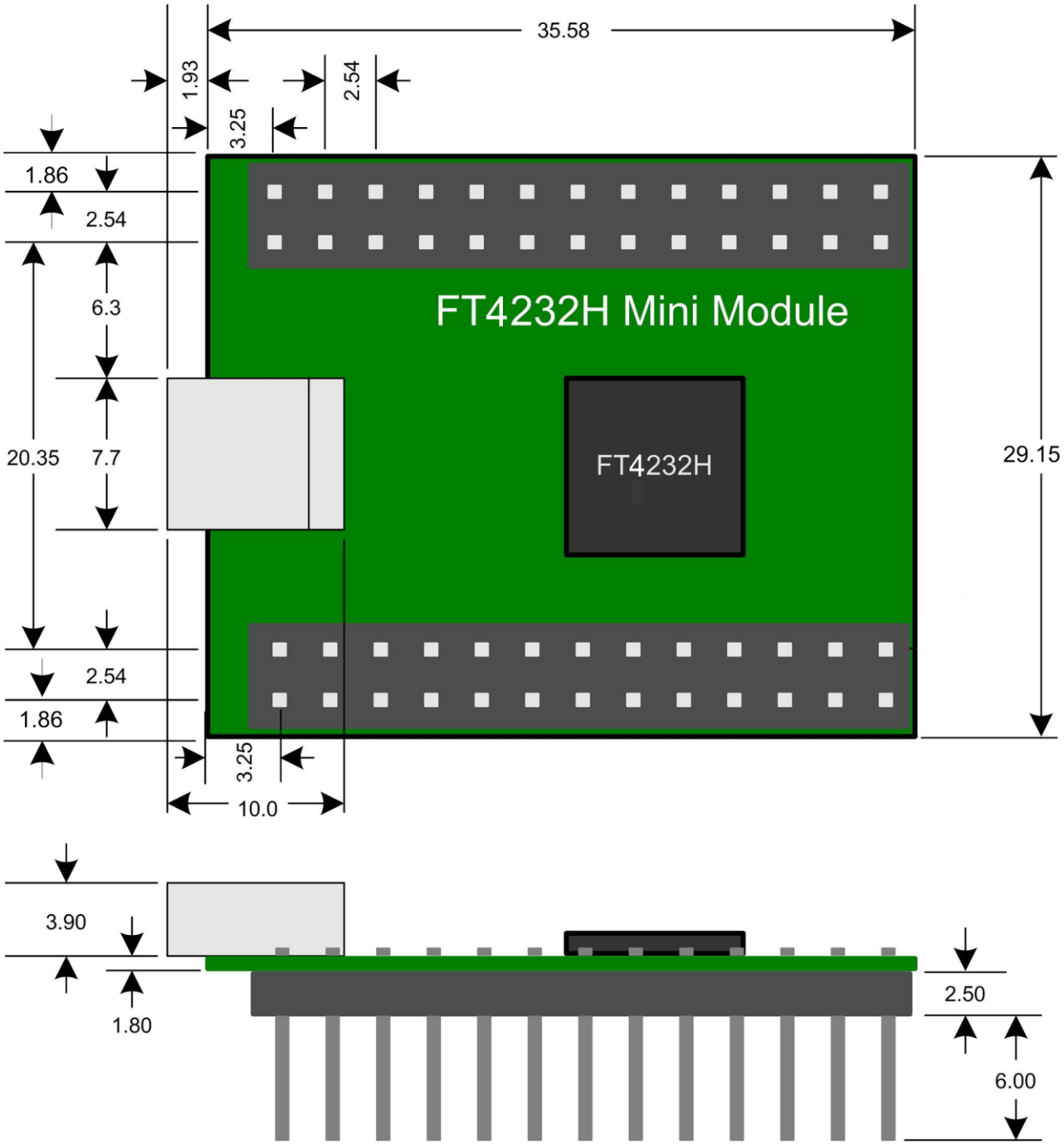

Figure 4.1 FT4232H Mini Module Dimensions

All dimensions are in millimetres.

The headers CN2 and CN3 are mounted to the bottom of the PCB. The overall height below the PCB is 8.5mm, with a body which exposes 6.0mm of the pins. The pins are 0.025 inch square.

The mini-B USB connector has a height of 3.9mm.

Copyright © 2012 Future Technology Devices International Limited

5 Schematic Diagram

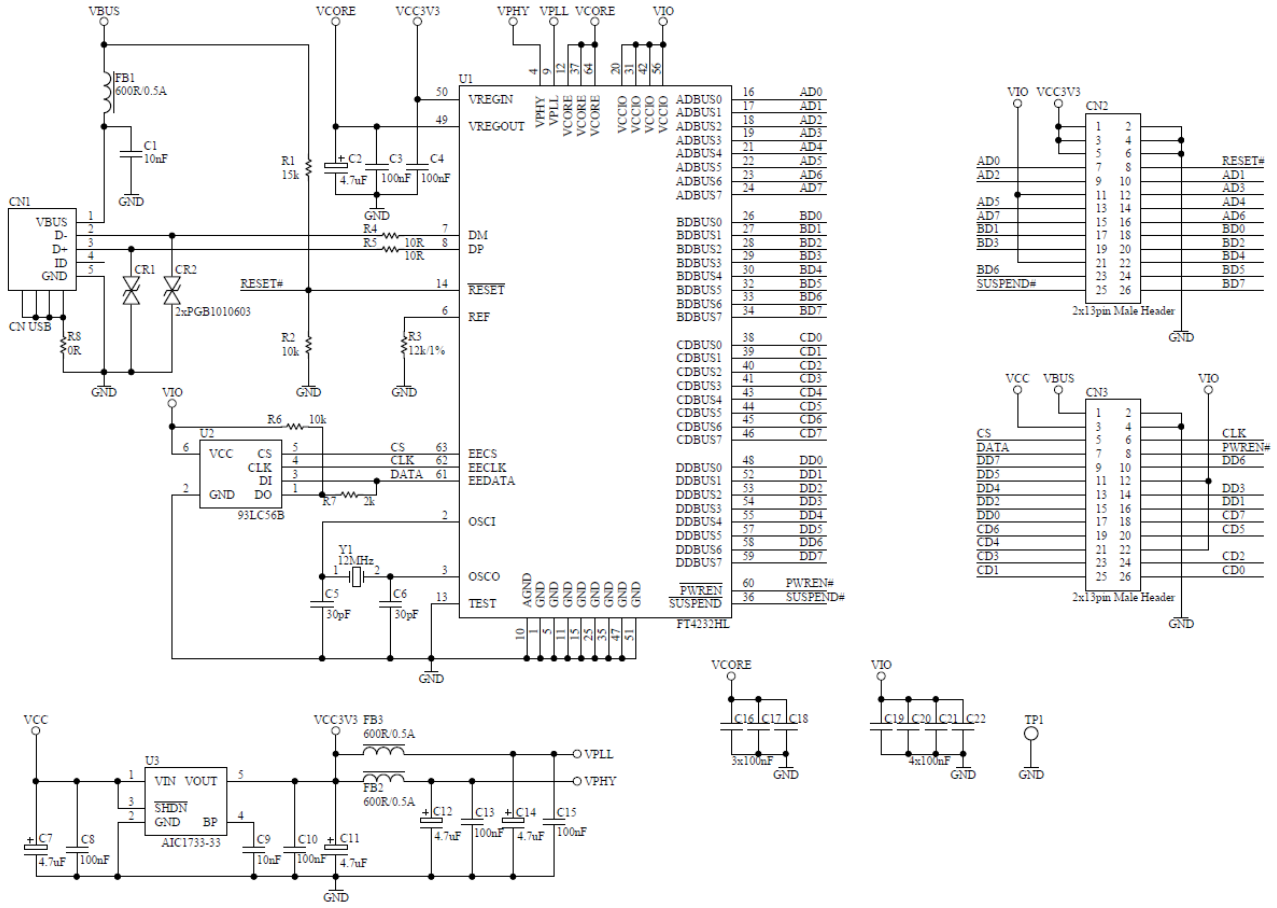

Figure 5.1 FT4232H Mini Module Schematic

Copyright © 2012 Future Technology Devices International Limited

6 Contact Information

Head Office – Glasgow, UK

Future Technology Devices International Limited
Unit 1, 2 Seaward Place, Centurion Business Park
Glasgow G41 1HH
United Kingdom
Tel: +44 (0) 141 429 2777
Fax: +44 (0) 141 429 2758

E-mail (Sales) sales1@ftdichip.com
E-mail (Support) support1@ftdichip.com
E-mail (General Enquiries) admin1@ftdichip.com

Branch Office – Taipei, Taiwan

Future Technology Devices International Limited (Taiwan)
2F, No. 516, Sec. 1, NeiHu Road
Taipei 114
Taiwan , R.O.C.
Tel: +886 (0) 2 8791 3570
Fax: +886 (0) 2 8791 3576

E-mail (Sales) asia.sales1@ftdichip.com
E-mail (Support) asia.support1@ftdichip.com
E-mail (General Enquiries) asia.admin1@ftdichip.com

Branch Office – Hillsboro, Oregon, USA

Future Technology Devices International Limited (USA)
7235 NW Evergreen Parkway, Suite 600
Hillsboro, OR 97123-5803
USA
Tel: +1 (503) 547 0988
Fax: +1 (503) 547 0987

E-Mail (Sales) us.sales@ftdichip.com
E-Mail (Support) us.support@ftdichip.com
E-Mail (General Enquiries) us.admin@ftdichip.com

Branch Office – Shanghai, China

Future Technology Devices International Limited (China)
Room 1103, No. 666,
West Huaihai Road,
Shanghai, 200052
China
Tel: +86 21 62351596
Fax: +86 21 62351595

E-mail (Sales) cn.sales@ftdichip.com
E-mail (Support) cn.support@ftdichip.com
E-mail (General Enquiries) cn.admin@ftdichip.com

Web Site

http://ftdichip.com

Distributor and Sales Representatives

Please visit the Sales Network page of the FTDI Web site for the contact details of our distributor(s) and sales representative(s) in your country.

Copyright © 2012 Future Technology Devices International Limited

Appendix A – FT4232H EEPROM Configuration

The FT4232H Mini Module utilizes an EEPROM which contains the USB configuration descriptors for the FT4232H. When the Mini Module is plugged into a PC or a USB reset is performed, the PC will read these descriptors. The default values stored into the EEPROM are defined in Table 0.1.

Parameter	Value	Notes
USB Vendor ID (VID)	0403h	FTDI default VID (hex)
USB Product UD (PID)	6011h	FTDI default PID (hex)
Serial Number Enabled?	Yes	
Serial Number	See Note	A unique serial number is generated and programmed into the EEPROM during device final test.
Pull down I/O Pins in USB Suspend	Disabled	Enabling this option will make the device pull down on the UART interface lines when the power is shut off (PWREN# is high).
Manufacturer Name	FTDI	
Product Description	FT4232H_MM	
Max Bus Power Current	500mA	
Power Source	Bus Powered	
Device Type	FT4232	
USB Version	0200	Returns USB 2.0 device description to the host. Note: The device is be a USB 2.0 Full Speed device (12Mb/s) as opposed to a USB 2.0 High Speed device (480Mb/s).
Remote Wake Up	Enabled	Taking RI# low will wake up the USB host controller from suspend.
High Current I/Os	Enabled	Enables the high drive level on the UART and CBUS I/O pins.
Load VCP Driver	Disabled	Makes the device load the VCP driver interface for the device.

Table 0.1 Default Internal EEPROM Configuration

The EEPROM on the FT4232H Mini Module can be re-programmed over USB using the utility program MPROG. MPROG can be downloaded from the **www.ftdichip.com**. Version 3.5 or later is required for the FT4232H chip. Users who do not have their own USB Vendor ID but who would like to use a unique Product ID in their design can apply to FTDI for a free block of unique PIDs. Contact FTDI support for this service.

Copyright © 2012 Future Technology Devices International Limited

Appendix B – Revision History

Version 1.0	Initial Release	12th Feb 2009
Version 1.1	Corrected VIO description on p6.	4th Mar 2009
Version 1.2	Changed PCB dimension from 20.32 to 29.4	23rd March 2009
Version 1.3	Corrected PCB dimensions	10th June 2009
Version 1.4	Added more PCB dimensions	25th June 2009
Version 1.5	Removed invert signals and corrected PCB dimension	11th August 2009
Version 1.6	Updated schematic diagrams Added USB certified Logo in section 1.1 Added RoHS compliant statement in section 1	26th Jan 2011
Version 1.7	Fixed title on front page from FT4323H to FT4232H	23rd June 2011
Version 1.8	Updated Contact Information, Figure 1.1, 3.1 and 4.1	25th June 2012

Copyright © 2012 Future Technology Devices International Limited