

Future Technology Devices International Ltd.

FT4232HA Mini Module

USB Hi-Speed Evaluation Module

Datasheet

Version 1.0

Future Technology Devices International Ltd (FTDI)
Unit 1, 2 Seaward Place, Centurion Business Park, Glasgow, G41 1HH, United Kingdom
Tel.: +44 (0) 141 429 2777 Fax: + 44 (0) 141 429 2758
E-Mail (Support): support1@ftdichip.com Web: http://www.ftdichip.com

Neither the whole nor any part of the information contained in, or the product described in this manual, may be adapted or reproduced in any material or electronic form without the prior written consent of the copyright holder. This product and its documentation are supplied on an as-is basis and no warranty as to their suitability for any particular purpose is either made or implied. Future Technology Devices International Ltd will not accept any claim for damages howsoever arising as a result of use or failure of this product. Your statutory rights are not affected. This product or any variant of it is not intended for use in any medical appliance, device or system in which the failure of the product might reasonably be expected to result in personal injury. This document provides preliminary information that may be subject to change without notice. No freedom to use patents or other intellectual property rights is implied by the publication of this document. Future Technology Devices International Ltd, Unit 1, 2 Seaward Place, Centurion Business Park, Glasgow, G41 1HH, United Kingdom. Scotland Registered Number: SC136640

Copyright © Future Technology Devices International Limited

1 Introduction

The FT4232HA Mini Module is a USB-serial/FIFO development module in the FTDI product range which utilizes the FT4232HA USB Hi-Speed four-port bridge chip which handles all the USB signalling and protocols. It is ideal for development purposes to quickly prove functionality of adding USB to a target design. The **FT4232HA** is available at **http://www.ftdichip.com**.

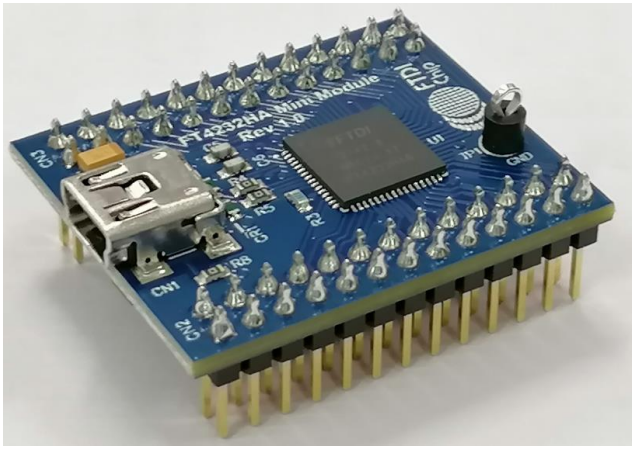

Figure 1.1 - FT4232HA Mini Module

The FT4232HA on the Mini Module is FTDI's 5th generation of USB devices. The FT4232HA is a USB 2.0 High Speed (480Mb/s) to UART/MPSSE IC that is automotive qualified for AEC temperature grade 2. The device features four interfaces that can be configured for asynchronous or synchronous serial. Two of these have an option to independently configure an MPSSE engine. This allows the FT4232HA to operate as two UART/Bit-Bang ports plus two MPSSE engines used to emulate JTAG, SPI, I^2C, Bit-bang or other synchronous serial modes. All components used, including the FT4232HA are Pb-free (RoHS compliant).
The FT4232HA Mini Module connects the signals of the FT4232HA IC to two 26-pin dual-row headers which allow easy connection to PCB header sockets and ribbon cables.

The FT4232HA Mini Module requires USB device drivers, available free from **http://www.ftdichip.com**, which are used to make the FT4232HA on the Mini Module appear as a four virtual COM ports (VCP). This then allows the user to communicate with the USB interface via a standard PC serial emulation port (TTY). Another FTDI USB driver, the D2XX driver, can also be used with application software to directly access the FT4232HA on the Mini Module though a DLL. This is illustrated in the Figure 1.2.

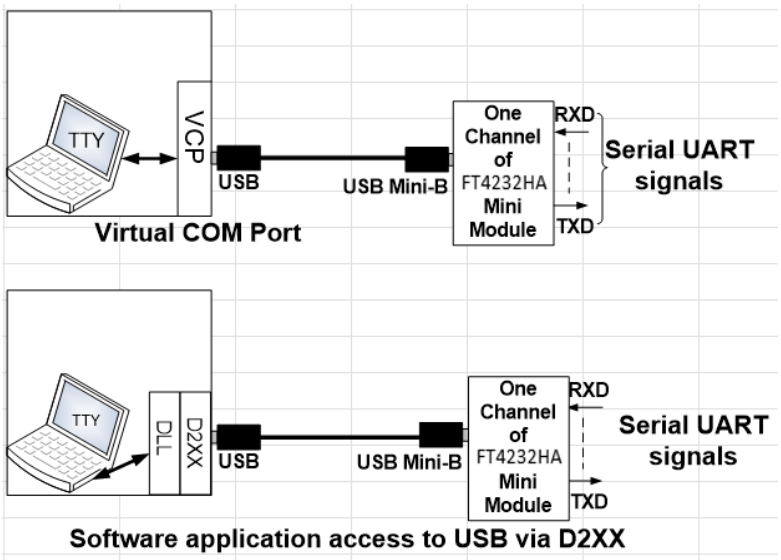

Figure 1.2 Using the FT4232HA Mini Module

Device Drivers for the FT4232HA Mini Module are available free from **http://www.ftdichip.com**.

Copyright © Future Technology Devices International Limited

Table of Contents

1 Introduction 1
2 Typical Applications 3
2.1 Driver Support 3
2.2 Features 3
3 Electrical Details 4
4 Mechanical details 7
5 Schematic Diagram 8
6 Contact Information 9
Appendix A – FT4232HA EEPROM Configuration 10
Appendix B – References 11
Document References 11
Acronyms and Abbreviations 11
Appendix C – List of Tables and Figures 12
List of Tables 12
List of Figures 12
Appendix D - Revision History 13

Copyright © Future Technology Devices International Limited

2 Typical Applications

- Rapid USB integration into existing electronic systems.
- Prototyping platform for USB interface on new systems.
- USB to multi-port JTAG, SPI and I^2C interfaces (Two Multi-Protocol Synchronous Serial Engines – MPSSE – available with the FT4232HA)
- USB to multi-port asynchronous serial interfaces (up to 4 ports available).
- Four independent ports available, two of which may be configured for MPSSE mode.

2.1 Driver Support

Royalty free VIRTUAL COM PORT (VCP) DRIVERS for…

- Windows 11,64-bit
- Windows 10 32,64-bit
- Windows 8/8.1 32,64-bit
- Windows 7 32,64-bit
- Windows Server 2008 and server 2012 R2
- Windows CE 4.2, 5.0 and 6.0
- Mac OS
- Linux 2.4 or later

Royalty free D2XX *Direct* Drivers (USB Drivers + DLL S/W Interface)

- Windows 11,64-bit
- Windows 10 32,64-bit
- Windows 8/8.1 32,64-bit
- Windows 7 32,64-bit
- Windows Server 2008 and server 2012 R2
- Windows CE 4.2, 5.0 and 6.0
- Mac OS
- Linux 2.4 or later
- Android (J2xx)

The drivers listed above are all available to download for free from **www.ftdichip.com**. Various 3rd Party Drivers are also available for various other operating systems - see **www.ftdichip.com** for details.

2.2 Features

The FT4232HA Mini Module has the following features:

- USB 2.0 Hi-Speed compatible
- Reduced development time
- Rapid integration into existing systems
- USB powered – no external power supply needed
- Based on the USB Hi-Speed FT4232HA device
- Entire USB protocol handled by USB module
- Small USB Type Mini-B connector common on many commercial devices
- Asynchronous Serial data transfer rates from 300 baud to 12 Mbaud at TTL levels
- Synchronous Serial (MPSSE) data rates of up to 30Mbps on JTAG, SPI and I^2C
- Support for USB suspend and resume
- UHCI / OHCI / EHCI host controller compatible
- -40°C to +85°C operating temperature range

Copyright © Future Technology Devices International Limited

3 Electrical Details

The electrical details and connections to the FT4232HA Mini Module are shown in Figure 3.1 and tables 3.1 and 3.2.

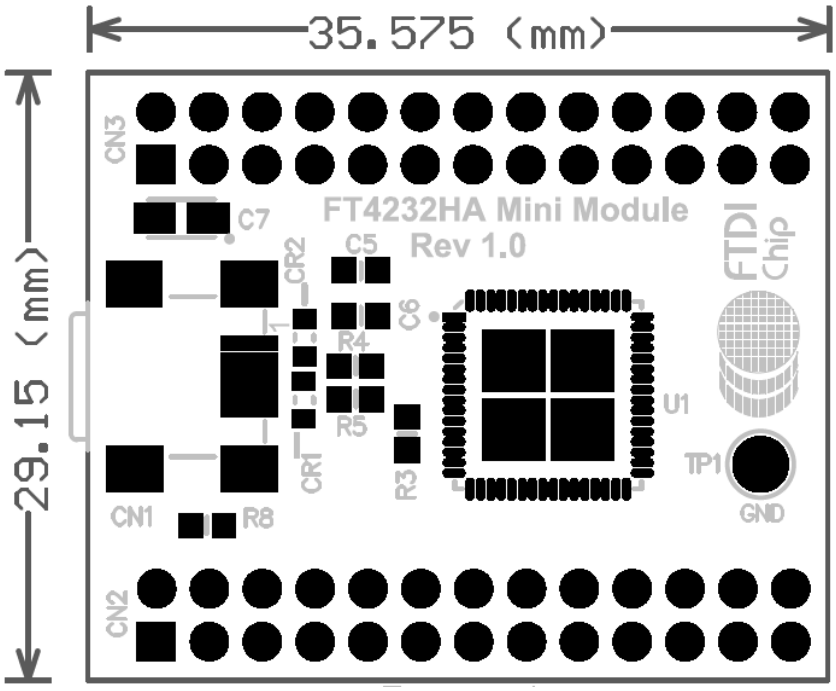

Figure 3.1 FT4232HA Mini Module Electrical Connections (Top View)

Connector Pin	Name	Description
CN2-1	VCC3V3	3.3VDC generated from VCC (output)
CN2-2	GND	0V Power pin
CN2-3	VCC3V3	3.3VDC generated from VCC (output)
CN2-4	GND	0V Power pin
CN2-5	VCC3V3	3.3VDC generated from VCC (output)
CN2-6	GND	0V Power pin
CN2-7	AD0	FT4232HA AD0 pin
CN2-8	RESET#	FT4232HA RESET# pin
CN2-9	AD2	FT4232HA AD2 pin
CN2-10	AD1	FT4232HA AD1 pin
CN2-11	VIO	Connected to all FT4232HA VCCIO pins (input)
CN2-12	AD3	FT4232HA AD3 pin
CN2-13	AD5	FT4232HA AD5 pin
CN2-14	AD4	FT4232HA AD4 pin
CN2-15	AD7	FT4232HA AD7 pin
CN2-16	AD6	FT4232HA AD6 pin
CN2-17	BD1	FT4232HA BD1 pin
CN2-18	BD0	FT4232HA BD0 pin
CN2-19	BD3	FT4232HA BD3pin
CN2-20	BD2	FT4232HA BD2 pin
CN2-21	VIO	Connected to all FT4232HA VCCIO pins (input)
CN2-22	BD4	FT4232HA BD4 pin
CN2-23	BD6	FT4232HA BD6 pin
CN2-24	BD5	FT4232HA BD5 pin
CN2-25	SUSPEND#	FT4232HA SUSPEND# pin
CN2-26	BD7	FT4232HA BD7 pin

Table 3.1 FT4232HA Mini Module Connection – CN2

Copyright © Future Technology Devices International Limited

Connector Pin	Name	Description
CN3-1	VBUS	USB VBUS power pin (output)
CN3-2	GND	0V Power pin
CN3-3	VCC	+5V Power pin (input) used to generate VCCV3V3, VPLL and VPHY
CN3-4	GND	0V Power pin
CN3-5	CS	FT4232HA EECS pin
CN3-6	CLK	FT4232HA EECLK pin
CN3-7	DATA	FT4232HA EEDATA pin
CN3-8	PWREN#	FT4232HA PWREN#
CN3-9	DD7	FT4232HA DD7 pin
CN3-10	DD6	FT4232HA DD6 pin
CN3-11	DD5	FT4232HA DD5 pin
CN3-12	VIO	Connected to all FT4232HA VCCIO pins (input)
CN3-13	DD4	FT4232HA DD4 pin
CN3-14	DD3	FT4232HA DD3 pin
CN3-15	DD2	FT4232HA DD2 pin
CN3-16	DD1	FT4232HA DD1 pin
CN3-17	DD0	FT4232HA DD0 pin
CN3-18	CD7	FT4232HA CD7 pin
CN3-19	CD6	FT4232HA CD6 pin
CN3-20	CD5	FT4232HA CD5 pin
CN3-21	CD4	FT4232HA CD4 pin
CN3-22	VIO	Connected to all FT4232HA VCCIO pins (input)
CN3-23	CD3	FT4232HA CD3 pin
CN3-24	CD2	FT4232HA CD2 pin
CN3-25	CD1	FT4232HA CD1 pin
CN3-26	CD0	FT4232HA CD0 pin

Table 3.2 FT4232HA Mini Module Connection – CN3

The FT4232HA pin is connected directly to the associated pin on CN2 or CN3.

The FT4232HA Mini Module allows configuration with both USB Bus-powered designs and USB Self-powered designs:

USB Bus-powered:

1) **Connect VBUS to VCC (CN3, pin 1 to CN3, pin 3).** This connection takes the power from the USB bus (VBUS) and connects it to the voltage regulator input on the FT4232HA Mini Module. The voltage regulator, in turn, provides VCC3V3, VPLL and VPHY power inputs to the FT4232HA chip.
2) **Short R9 to connect VCC3V3 (CN2, pin 1, 3, 5) to VIO (CN2, pins 11 & 21 and CN3, pins 12 & 22).** This connection provides 3.3VDC operating voltage for VCCIO on the FT4232HA chip.

USB Self-Powered:

1) **Leave VBUS (CN3, pin 1) unconnected.**
2) **Connect an external 5.0VDC power supply to VCC (5.0VDC to CN3, pin 3).** This connection takes power from an external power supply and connects it to the voltage regulator input on the FT4232HA Mini Module. See the FT4232HA datasheet for allowable VCC input voltage ranges.
3) **Short R9 to connect VCC3V3 (CN2, pin 1, 3, 5) to VIO (CN2, pins 11 & 21 and CN3, pins 12 & 22).** This connection provides 3.3VDC operating voltage for VCCIO on the FT4232HA chip.
4) **Use FT_PROG to change the USB power descriptor to "Self-Powered".** This setting indicates to the host system that the USB Host port does not need to supply power to the device. FT_PROG is a utility provided by FTDI to program various features of the FT-series USB client ICs. FT_PROG is available through the Utilities section of the FTDI web site.

Note: Failure to connect all power pins can cause issues with operation.

Copyright © Future Technology Devices International Limited

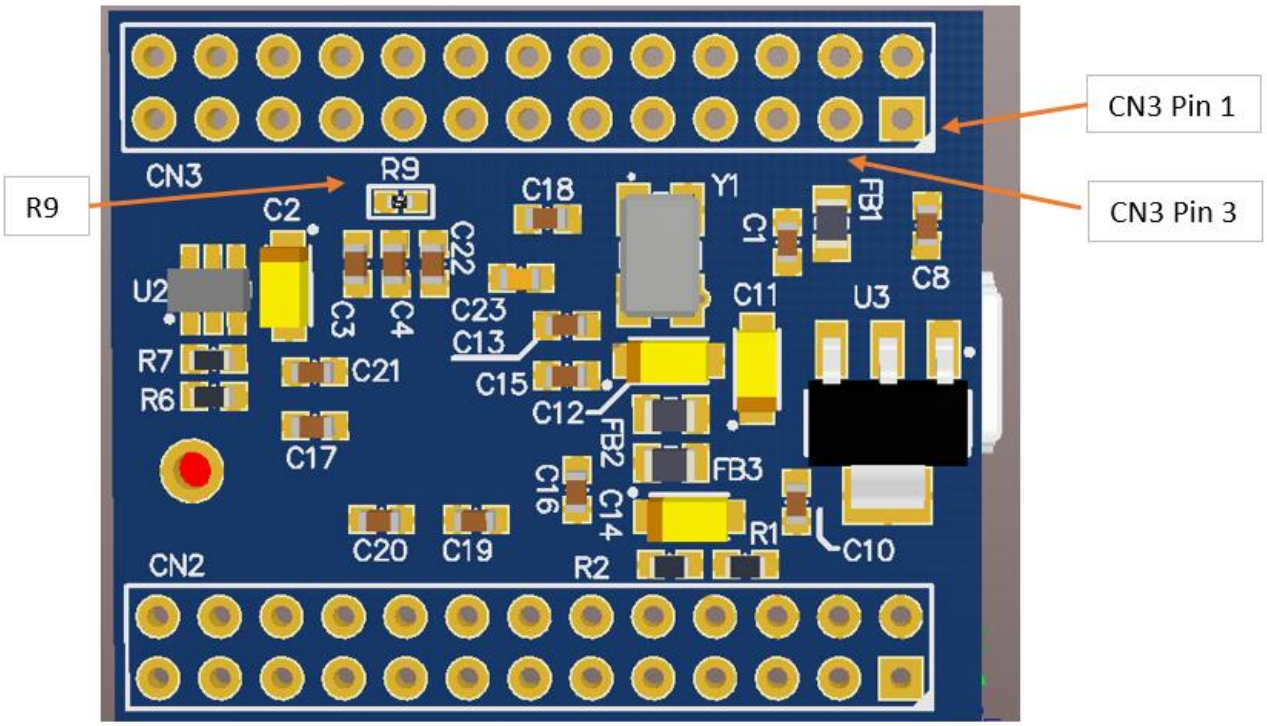

Copyright © Future Technology Devices International Limited

4 Mechanical details

The mechanical details of the FT4232HA Mini Module are shown in Figure 4.1:

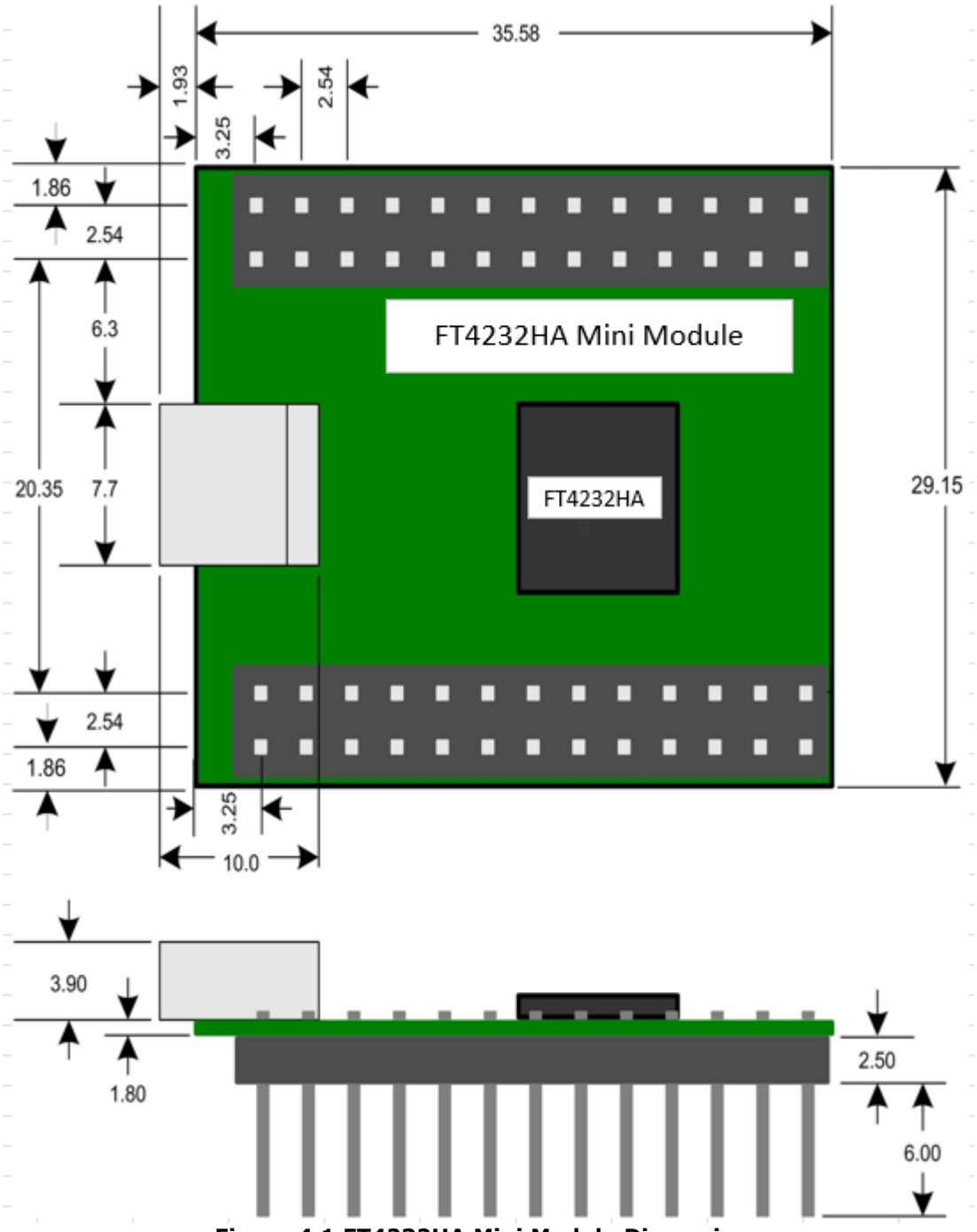

Figure 4.1 FT4232HA Mini Module Dimensions

All dimensions are in millimetres.

The headers CN2 and CN3 are mounted to the bottom of the PCB. The overall height below the PCB is 8.5mm, with a body which exposes 6.0mm of the pins. The pins are 0.025 inch square.

The mini-B USB connector has a height of 3.9mm.

Copyright © Future Technology Devices International Limited

5 Schematic Diagram

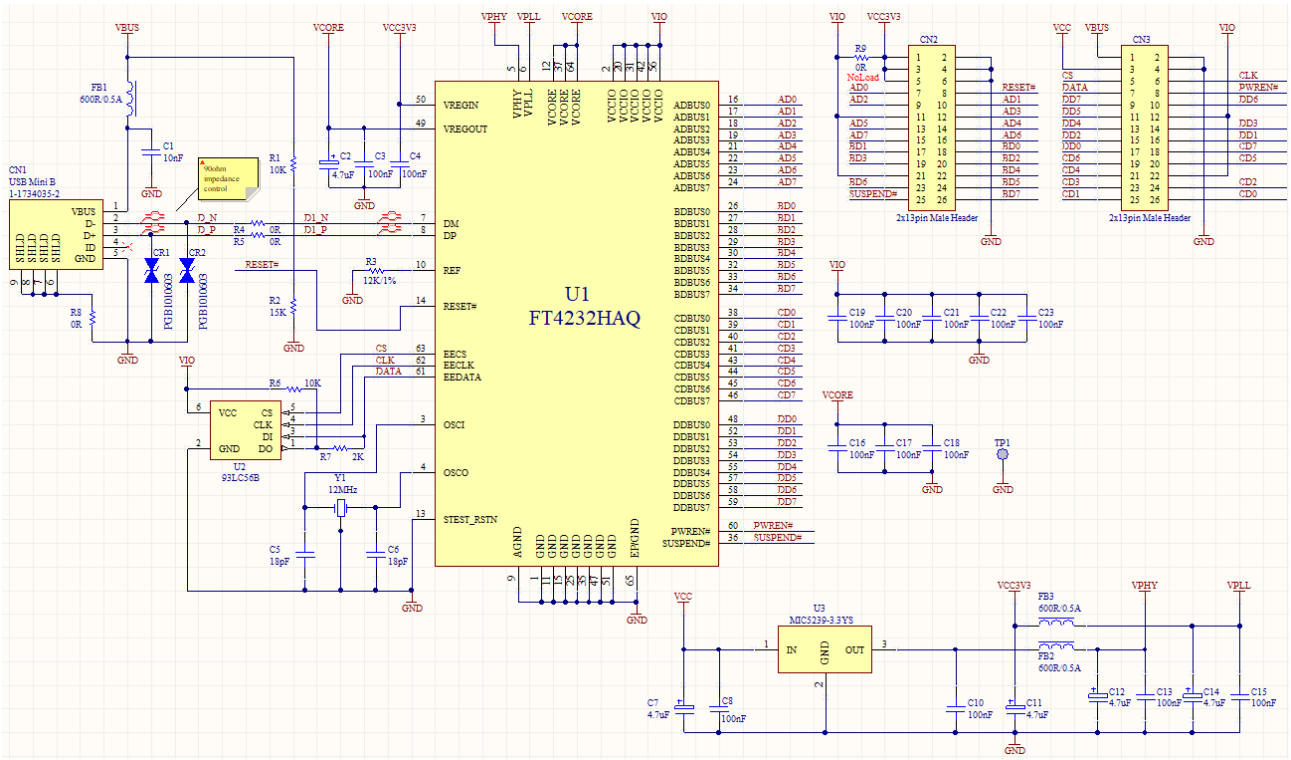

Figure 5.1 FT4232HA Mini Module Schematic

6 Contact Information

Head Office – Glasgow, UK

Future Technology Devices International Limited
Unit 1, 2 Seaward Place, Centurion Business Park
Glasgow G41 1HH
United Kingdom
Tel: +44 (0) 141 429 2777
Fax: +44 (0) 141 429 2758

E-mail (Sales) sales1@ftdichip.com
E-mail (Support) support1@ftdichip.com
E-mail (General Enquiries) admin1@ftdichip.com

Branch Office – Taipei, Taiwan

Future Technology Devices International Limited (Taiwan)
2F, No. 516, Sec. 1, NeiHu Road
Taipei 114
Taiwan, R.O.C.
Tel: +886 (0) 2 8797 1330
Fax: +886 (0) 2 8751 9737

E-mail (Sales) asia.sales1@ftdichip.com
E-mail (Support) asia.support1@ftdichip.com
E-mail (General Enquiries) asia.admin1@ftdichip.com

Branch Office – Hillsboro, Oregon, USA

Future Technology Devices International Limited (USA)
7130 SW Fir Loop
Tigard, OR 97223-8160
USA
Tel: +1 (503) 547 0988
Fax: +1 (503) 547 0987

E-Mail (Sales) us.sales@ftdichip.com
E-Mail (Support) us.support@ftdichip.com
E-Mail (General Enquiries) us.admin@ftdichip.com

Branch Office – Shanghai, China

Future Technology Devices International Limited (China)
Room 1103, No. 666,
West Huaihai Road,
Shanghai, 200052
China
Tel: +86 21 62351596
Fax: +86 21 62351595

E-mail (Sales) cn.sales@ftdichip.com
E-mail (Support) cn.support@ftdichip.com
E-mail (General Enquiries) cn.admin@ftdichip.com

Web Site

http://ftdichip.com

Distributor and Sales Representatives

Please visit the Sales Network page of the FTDI Web site for the contact details of our distributor(s) and sales representative(s) in your country.

Copyright © Future Technology Devices International Limited

Appendix A – FT4232HA EEPROM Configuration

The FT4232HA Mini Module utilizes an EEPROM which contains the USB configuration descriptors for the FT4232HA. When the Mini Module is plugged into a PC or a USB reset is performed, the PC will read these descriptors. The default values stored into the EEPROM are defined in Table 0.1.

Parameter	Value	Notes
USB Vendor ID (VID)	0403h	FTDI default VID (hex)
USB Product UD (PID)	6048h	FTDI default PID (hex)
Bcd Device	0x3600	
Serial Number Enabled?	Yes	
Serial Number	See Note	A unique serial number is generated and programmed into the EEPROM during device final test.
Pull down I/O Pins in USB Suspend	Disabled	Enabling this option will make the device pull down on the UART interface lines when in USB suspend mode (PWREN# is high).
Manufacturer Name	FTDI	
Product Description	FT4232HA	
Max Bus Power Current	500mA	
Power Source	Bus Powered	
Device Type	FT4232HA	
USB Version	0200h	Returns USB 2.0 device description to the host. Note: The device is be a USB 2.0 Full Speed device (12Mb/s) as opposed to a USB 2.0 High Speed device (480Mb/s).
Remote Wake Up	Disable	Taking RI# low will wake up the USB host controller from suspend.
RI RS485	Disable	Enables TXDEN signal for RS485 buses.
High Current I/Os	Disable	Enables the high drive level on the UART and CBUS I/O pins.
IO Slew	Disabled	Slow slew rate if enabled
Schmitt Trigger for Input pin	Normal trigger	Schmitt trigger for input pin if enabled
Load VCP Driver	Enable	Makes the device load the VCP driver interface for the device.

Table 0.1 Default Internal EEPROM Configuration

The EEPROM on the FT4232HA Mini Module can be re-programmed over USB using the utility program FT_PROG which can be downloaded from **www.ftdichip.com**. Users who do not have their own USB Vendor ID but who would like to use a unique Product ID in their design can apply to FTDI for a free block of unique PIDs. Contact FTDI support for this service.

Copyright © Future Technology Devices International Limited

Appendix B – References

Document References

FT4232HA

FT_PROG

Utilities

FT4232HA datasheet

Acronyms and Abbreviations

Terms	Description
DLL	Dynamic Link Library
EHCI	Enhanced Host Controller Interface
EEPROM	Electrically Erasable Programmable Read-Only Memory
FIFO	First In First Out
IC	Integrated Circuit
I2C	Inter Integrated Circuit
JTAG	Joint Test Action Group
MPSSE	Multi-Protocol Synchronous Serial Engine
OHCI	Open House Controller Interface
PCB	Printed Circuit Board
SPI	Serial Peripheral Interface
TTL	Transistor-Transistor Logic
USB	Universal Serial Bus
UART	Universal Asynchronous Receiver Transmitter
UHCI	Universal Host Controller Interface
VCP	Virtual COM Port

Copyright © Future Technology Devices International Limited

Appendix C – List of Tables and Figures

List of Tables

Table 3.1 FT4232HA Mini Module Connection – CN2 4
Table 3.2 FT4232HA Mini Module Connection – CN3 5
Table 0.1 Default Internal EEPROM Configuration 10

List of Figures

Figure 3.1 FT4232HA Mini Module Electrical Connections (Top View) 4
Figure 4.1 FT4232HA Mini Module Dimensions 7
Figure 5.1 FT4232HA Mini Module Schematic 8

Copyright © Future Technology Devices International Limited

Appendix D - Revision History

Document Title: FT4232HA Mini Module Datasheet

Document Reference No.: FT_001519

Clearance No.: FTDI#570

Product Page: https://ftdichip.com/product-category/products/

Document Feedback: Send Feedback

Revision	Changes	Date
Version 1.0	Initial Release	04-03-2022

Copyright © Future Technology Devices International Limited