Future Technology Devices International Ltd

Datasheet

FT12 Series Evaluation Kit

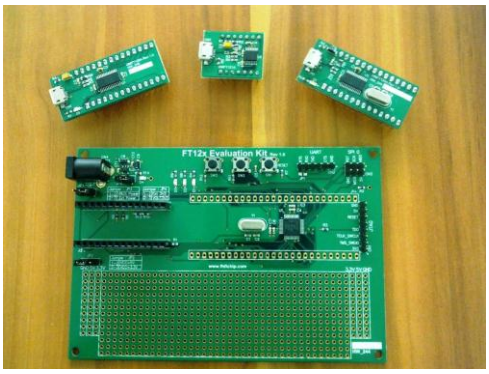

Generic USB device development kit

1 Introduction

The FT12 series evaluation kit is used to develop and demonstrate functions of FTDI's FT120, FT121 and FT122 ICs. The kit consists of a main board and one of the FT120/FT121/FT122 add-on modules. These modules can provide a generic USB device function to a microcontroller(MCU) with the following interfaces:

- UMFT120DC: 8-bit 8051 interface, up to 3 bi-directional endpoints
- UMFT121DC: SPI slave interface, up to 8 bi-directional endpoints
- UMFT122DC: 8-bit 8051 interface, up to 8 bi-directional endpoints

1.1 Features

- Micro-B USB connector to connect to USB host or Charger port
- Allow bus-power or self-power configuration
- LPC1114 Cortex-M0 microcontroller for easy software development
- Pushbutton and LEDs for HID application
- In-system firmware upgradable
- On-board prototype area for application development

2 Ordering Information

Part No *	Description
UMFT12XEV	Main board for evaluating FT120, FT121 and FT122 add-on modules. Fitted with LPC1114 Cortex-M0 MCU. Firmware upgradable with UART or SWD interface. Note: Board is shipped with firmware to support CDC class devices pre-loaded
UMFT120DC	FT120 add-on module. 8-bit 8051 parallel bus. 3 bi-directional endpoints. I/O level 3.3V (5V tolerant). Compatible to PDIUSBD12.
UMFT121DC	FT121 add-on module. SPI slave bus. 8 bi-directional endpoints. I/O level 1.8/2.5/3.3V.
UMFT122DC	FT122 add-on module. 8-bit 8051 parallel bus. 8 bi-directional endpoints. I/O level 1.8/2.5/3.3V.

* Note that PCB label may differ

Table 2-1 Ordering information

Use of FTDI devices in life support and/or safety applications is entirely at the user's risk, and the user agrees to defend, indemnify and hold harmless FTDI from any and all damages, claims, suits or expense resulting from such use.

Table of Contents

1 Introduction 1
1.1 Features 1
2 Ordering Information 1
3 Hardware description 3
3.1 UMFT12XEV Main Board 3
3.2 UMFT120DC daughter board 4
3.3 UMFT121DC daughter board 6
3.4 UMFT122DC daughter board 7
3.5 Accessories 8
4 Initial Board Set-up 10
4.1 Installing UMFT12xDC daughter board 10
4.2 Set the jumpers 10
4.3 Install the driver 11
5 Running demo tests 16
5.1 Serial Loopback test 16
5.2 USB Charger test 16
6 Board Circuit Schematics and BOMs 18
6.1 UMFT12XEV Schematic and BOM 18
6.2 UMFT120DC Schematic and BOM 19
6.3 UMFT121DC Schematic and BOM 20
6.4 UMFT122DC Schematic and BOM 21
7 Firmware Upgrade Process 23
7.1 Put LPC1114 microcontroller in ISP mode 23
7.2 Connect the TTL-232R-3V3 cable 23
7.3 Upgrade firmware 24
8 Environmental Compliances 25
9 Contact Information 26
Appendix A - List of Figures and Tables 27
Appendix B – Abbreviations and References 29
Appendix C - Revision History 30

Copyright © 2012 Future Technology Devices International Limited

3 Hardware description

3.1 UMFT12XEV Main Board

The UMFT12XEV board is intended for use as a hardware platform to enable easy evaluation of FTDI's FT120, FT121 and FT122 series of USB peripheral controllers. The UMFT12XEV boards utilize a NXP Cortex-M0 based microcontroller (LPC1114) to interface to FT12 series with parallel or SPI bus. The LEDs and push buttons can be used to demo the HID keyboard functions. A prototype area is also built on the UMFT12XEV board, allowing user defined application circuit to be added so that application hardware/firmware can be developed and tested on the prototype before porting over to mass production.

Figure 3-1 shows the PCB layout with main component positions. These components include:

- 14x2 socket for add-on module: insert any of the three daughter boards (UMFT120DC, UMFT121DC, UMFT122DC)
- 3.3V Regulator: It takes 5V input from USB Vbus (bus-power) or DC jack CN4 (self power) and output 3.3V for on-board circuits
- LED(GPIO): 2 LED diodes for GPIO status display. Can be used for HID keyboard status LED
- LED(BCD_DET): This LED indicates if a USB Charger is attached and detected by FT121/FT122
- Push Button(GPIO): 2 push buttons for GPIO control input. Can be used for HID keyboard function keys
- Reset button: hardware reset button
- UART connector: This 6-pin UART connector can be used for in-system firmware download as well as firmware debug port
- SPI0 connector: This 6-pin SPI connector can be used to connect to a SPI slave board
- JTAG/SWD connector: This 8-pin connector is for connecting to LPC-link for firmware download or debug purpose
- LPC1114 Microcontroller: 44-pin LPC1114 Cortex-M0 MCU to control FT12x and other peripherals
- Prototype area: for adding extra application circuits for prototyping purpose

Copyright © 2012 Future Technology Devices International Limited

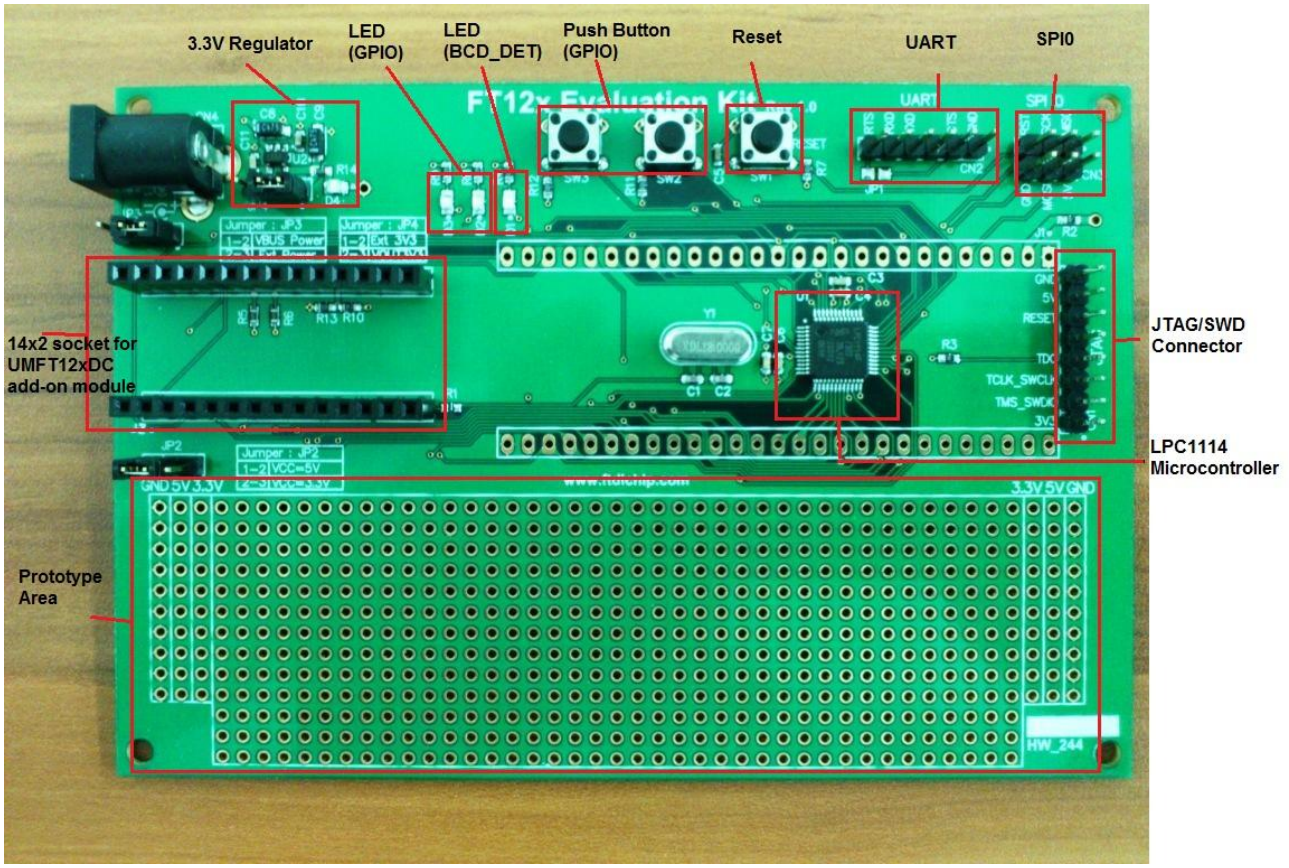

Figure 3-1 UMFT12XEV main board

3.2 UMFT120DC daughter board

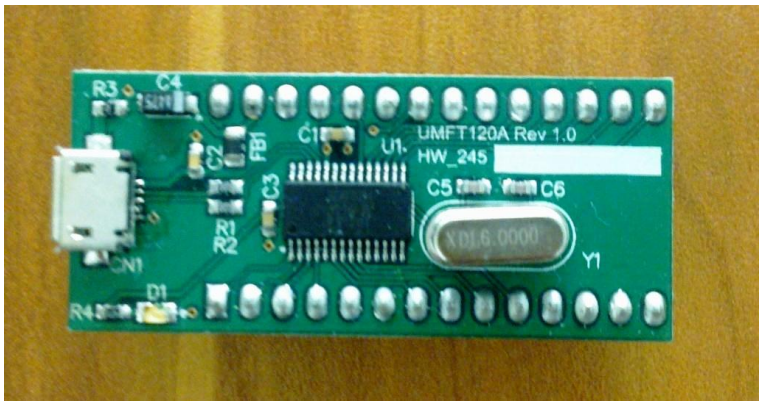

Figure 3-2 UMFT120DC daughter board

PIN No.	PIN NAME	TYPE	DESCRIPTION
1	D0	IO	Data bus bit 0.
2	D1	IO	Data bus bit 1.
3	D2	IO	Data bus bit 2.
4	D3	IO	Data bus bit 3.
5	NC	-	No Connection

Copyright © 2012 **Future Technology Devices International Limited**

PIN No.	PIN NAME	TYPE	DESCRIPTION
6	GND	P	Ground
7	D4	IO	Data bus bit 4.
8	D5	IO	Data bus bit 5.
9	D6	IO	Data bus bit 6.
10	D7	IO	Data bus bit 7.
11	ALE	I	Address latch enable for multiplexed address/data bus configuration. This pin must be pulled Low for non-multiplexed address/data bus configuration.
12	CS_n	I	Chip select (Active Low).
13	GND	P	Ground
14	CLKOUT	O	Programmable output clock.
15	RD_n	I	Read enable (Active Low).
16	WR_n	I	Write enable (Active Low).
17	DMREQ	O	DMA request.
18	DMACK_n	I	DMA acknowledge (Active Low).
19	EOT_n	I	End of DMA transfer (Active Low). Also function as Vbus sensing input for self-powered application.
20	GL_n	OD	USB bus activity indicator (Active Low)
21	A0	I	Address bit for non-multiplexed address/data bus configuration. - A0=1 indicates command phase; - A0=0 indicates data phase. This pin must be pulled High for multiplexed address/data bus configuration.
22	SUSPEND	I,OD	Device suspend (output) and wakeup (input).
23	INT_n	OD	Interrupt (Active Low).
24	RESET_n	I	Asynchronous reset (Active Low).
25	NC	-	No Connection
26	VOUT3V3	P	3.3V regulator output
27	VBUS	P	5V VBUS power from USB connector
28	VCC	P	VCC power supply

Table 3-1 UMFT120DC J1 Pin Out Description

Copyright © 2012 **Future Technology Devices International Limited**

3.3 UMFT121DC daughter board

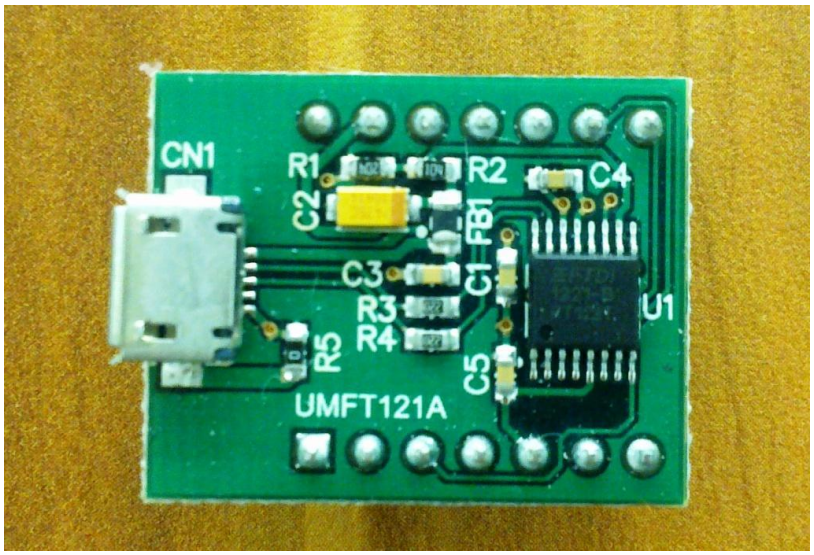

Figure 3-3 UMFT121DC daughter board

PIN No.	PIN NAME	TYPE	DESCRIPTION
1	SS_n	I	SPI slave select input.
2	SCLK	I	SPI clock input.
3	MISO	O	4-wire mode: SPI slave output. 3-wire mode: no function. Leave it un-connected.
4	MOSI	I/IO	4-wire mode: SPI salve input 3-wire mode: SPI data input/output
5	VCCIO	P	IO Supply Voltage; 1.8V, 2.5V or 3.3V
6	GND	P	Ground
7	NC	-	No Connection
8	SUSPEND	I,OD	Device suspend (output) and wakeup (input).
9	INT_n	OD	Interrupt (Active Low).
10	RESET_n	I	Asynchronous reset (Active Low).
11	BCD_n	OD	USB Charger detector output
12	VOUT3V3	P	3.3V regulator output
13	VBUS	P	5V VBUS power from USB connector
14	VCC	P	VCC power supply

Table 3-2 UMFT121DC J1 Pin Out Description

Copyright © 2012 Future Technology Devices International Limited

3.4 UMFT122DC daughter board

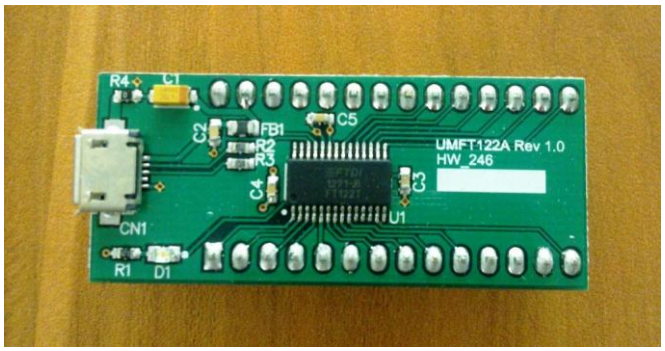

Figure 3-4 UMFT122DC daughter board

PIN No.	PIN NAME	TYPE	DESCRIPTION
1	D0	IO	Data bus bit 0.
2	D1	IO	Data bus bit 1.
3	D2	IO	Data bus bit 2.
4	D3	IO	Data bus bit 3.
5	VCCIO	P	IO Supply Voltage; 1.8V, 2.5V or 3.3V
6	GND	P	Ground
7	D4	IO	Data bus bit 4.
8	D5	IO	Data bus bit 5.
9	D6	IO	Data bus bit 6.
10	D7	IO	Data bus bit 7.
11	ALE	I	Address latch enable for multiplexed address/data bus configuration. This pin must be pulled Low for non-multiplexed address/data bus configuration.
12	CS_n	I	Chip select (Active Low).
13	GND	P	Ground
14	CLKOUT	O	Programmable output clock.
15	RD_n	I	Read enable (Active Low).
16	WR_n	I	Write enable (Active Low).
17	DMREQ	O	DMA request.
18	DMACK_n	I	DMA acknowledge (Active Low).
19	EOT_n	I	End of DMA transfer (Active Low). Also function as Vbus sensing input for self-powered application.
20	GL_n	OD	USB bus activity indicator (Active Low)
21	A0	I	Address bit for non-multiplexed address/data bus configuration. - A0=1 indicates command phase; - A0=0 indicates data phase.

Copyright © 2012 Future Technology Devices International Limited

PIN No.	PIN NAME	TYPE	DESCRIPTION
			This pin must be pulled High for multiplexed address/data bus configuration.
22	SUSPEND	I,OD	Device suspend (output) and wakeup (input).
23	INT_n	OD	Interrupt (Active Low).
24	RESET_n	I	Asynchronous reset (Active Low).
25	BCD_n	OD	USB Charger detector output
26	VOUT3V3	P	3.3V regulator output
27	VBUS	P	5V VBUS power from USB connector
28	VCC	P	VCC power supply

Table 3-3 UMFT122DC J1 Pin Out Description

3.5 Accessories

Accessories that might be useful for the FT12x Evaluation kit demo and firmware upgrade/debug:

a) Micro-B to Standard-A USB cable: for connecting the FT12x evaluation kit to PC host or USB charger port



Figure 3-5 Micro-B to Standard-A cable

b) TTL-232R-3V3 USB cable (optional): for firmware upgrade. For more info please refer to http://www.ftdichip.com/Products/Cables/USBTTLSerial.htm. Can be purchased from FTDI online shop (http://apple.clickandbuild.com/cnb/shop/ftdichip?productID=53&op=catalogue-product_info-null&prodCategoryID=105).



Figure 3-6 TTL-232R-3V3 USB cable

Copyright © 2012 Future Technology Devices International Limited

c) LPC-Link JTAG/SWD debugger module (optional): for firmware download and debug. For more info refer to http://ics.nxp.com/lpcxpresso/ .



Figure 3-7 LPC-Link debugger module

4 Initial Board Set-up

4.1 Installing UMFT12xDC daughter board

Insert the daughter board module (UMFT120DC, UMFT121DC or UMFT122DC) into the UMFT12XEV main board. Pin 1 of daughter board connector J1 shall plug into pin 1 of the socket J2 on the main board. After connection the micro-USB connector on the UMFT12xDC module should be facing outside.

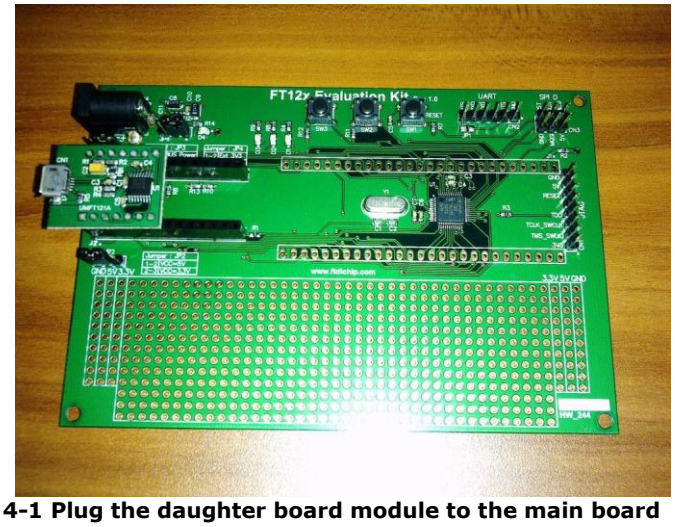

Figure 4-1 Plug the daughter board module to the main board

4.2 Set the jumpers

On the main board JP2, JP3 and JP4 need to be set to the default location as indicated in Table 4-1.

Pin header	Jumper Pin position	Comment
JP2	Short pin 1-2 (default) Short pin 2-3	VCC=5V VCC=3.3V
JP3	Short pin 1-2 (default) Short pin 2-3	Bus power Self power, a 5V DC power shall be applied to DC jack CN4
JP4	Short pin 1-2 (default) Short pin 2-3	External 3.3V regulator for on-board circuits FT12x built-in 3.3V regulator for on-board circuits

Table 4-1 Default setting of the jumpers

Copyright © 2012 Future Technology Devices International Limited

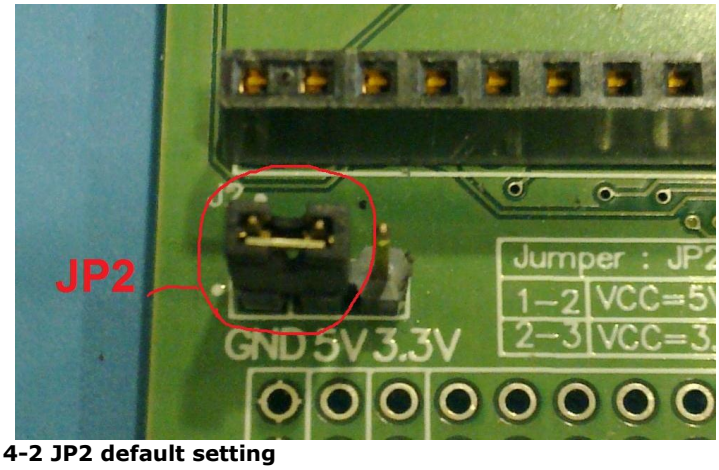

Figure 4-2 JP2 default setting

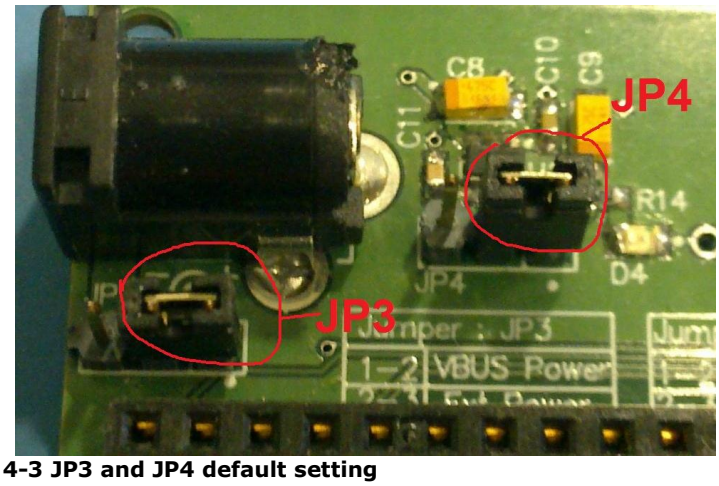

Figure 4-3 JP3 and JP4 default setting

4.3 Install the driver

The LPC1114 on the UMFT12XEV board is pre-loaded with firmware supporting Communication Device Class (CDC class). The major OSs support the CDC protocol on their USB stack to use serial port communication, allowing PC's to access the CDC device through a virtual COM port (VCP) without developing a new driver.

Linux recognize the CDC device as /dev/ttyACM# (# denotes a number). The driver is loaded automatically when the device is connected.

Mac OS recognize the CDC device as /dev/cu.usbmodem# (# denotes a number). The driver is loaded automatically when the device is connected.

Windows has a CDC protocol driver (usbser.sys) to generate VCP. However, it requires a "Setting Information (INF)" file at the first connection. The required INF file can be download from FTDI website http://www.ftdichip.com/Products/Modules/DevelopmentModules.htm.

Here is an example of driver installation under Windows 7 32-bit system:

- Connect the daughter card USB connector to the test PC with the micro-USB-B to Standard-A cable
- On Windows 7 PC, open control panel->device manager

Copyright © 2012 Future Technology Devices International Limited

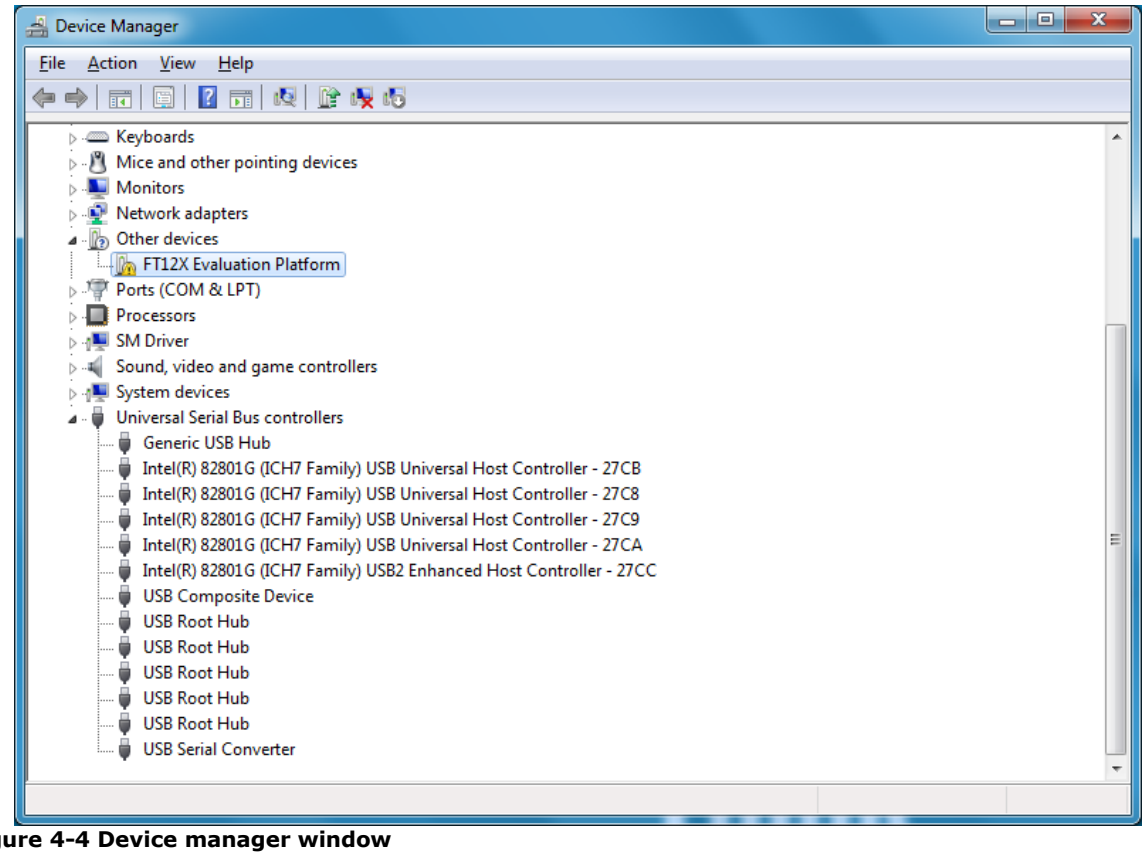

Figure 4-4 Device manager window

❖ Right click on "FT12X Evaluation Platform" under "Other devices" category, select "Property"

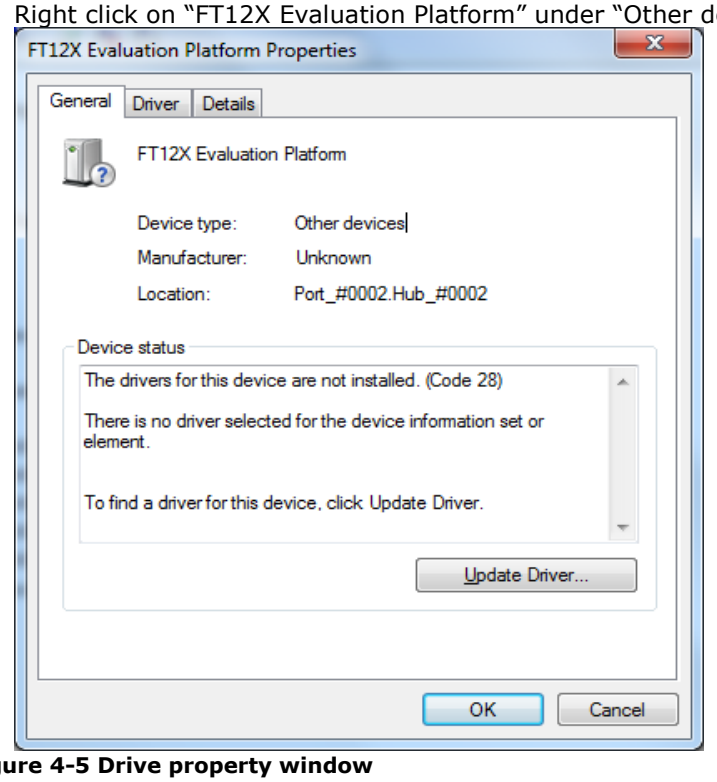

Figure 4-5 Drive property window

❖ Click "Update Driver…"

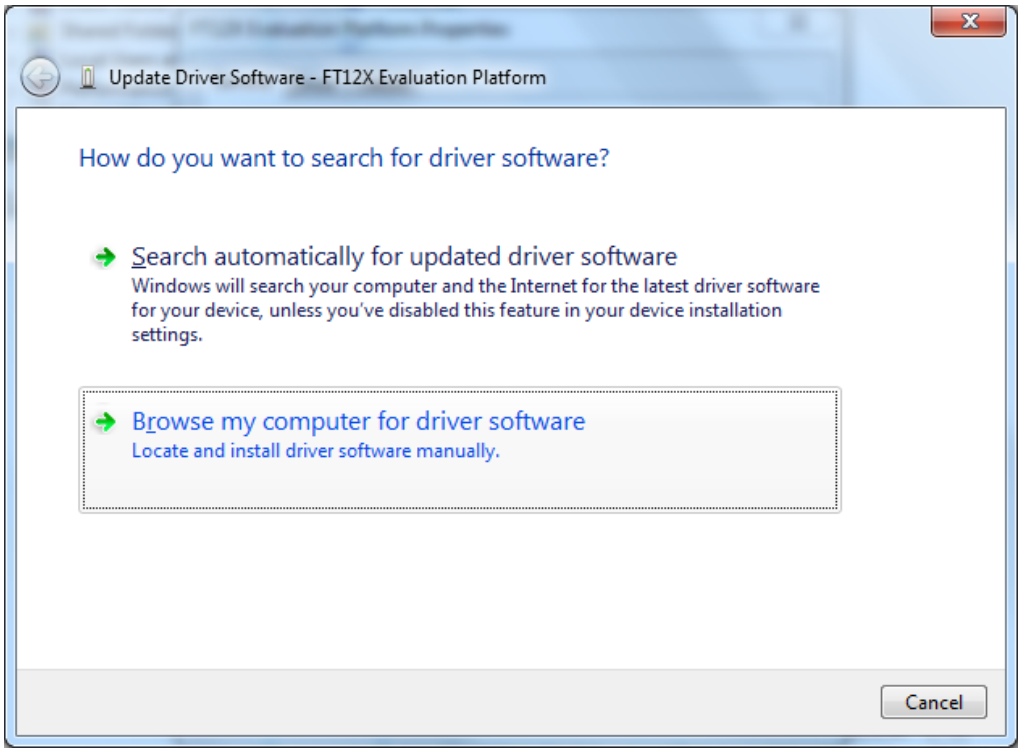

Figure 4-6 Update driver window

❖ Click "Browse my computer for driver software"

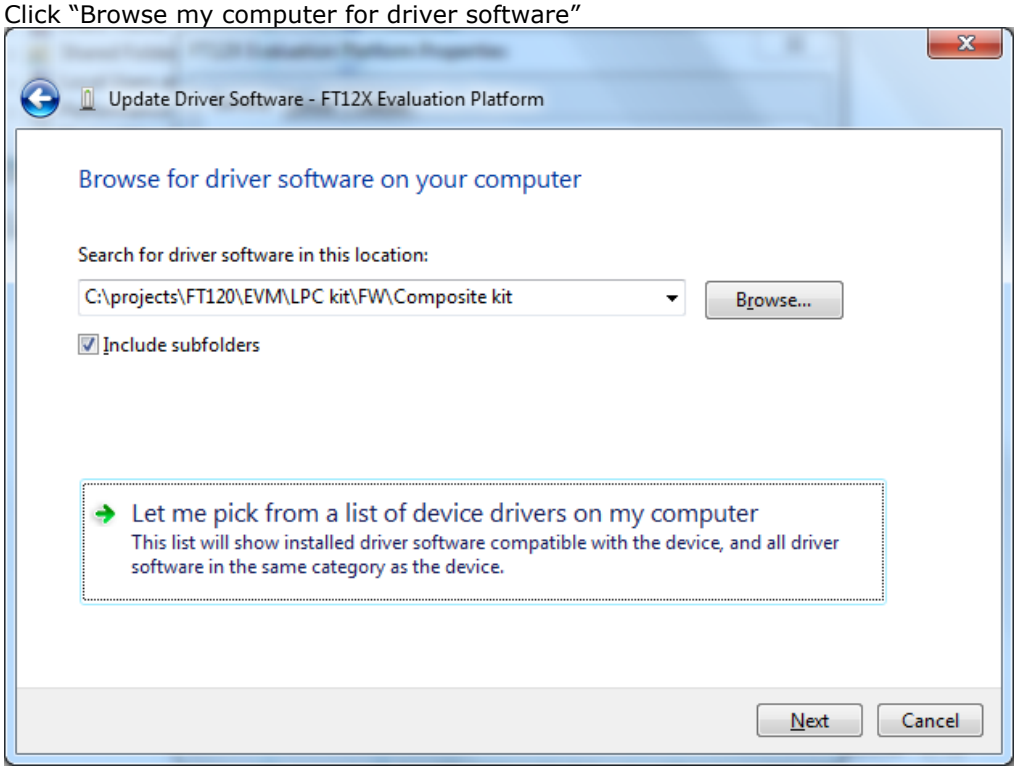

Figure 4-7 Update driver window

❖ Click "Let me pick from a list of device drivers on my computer"

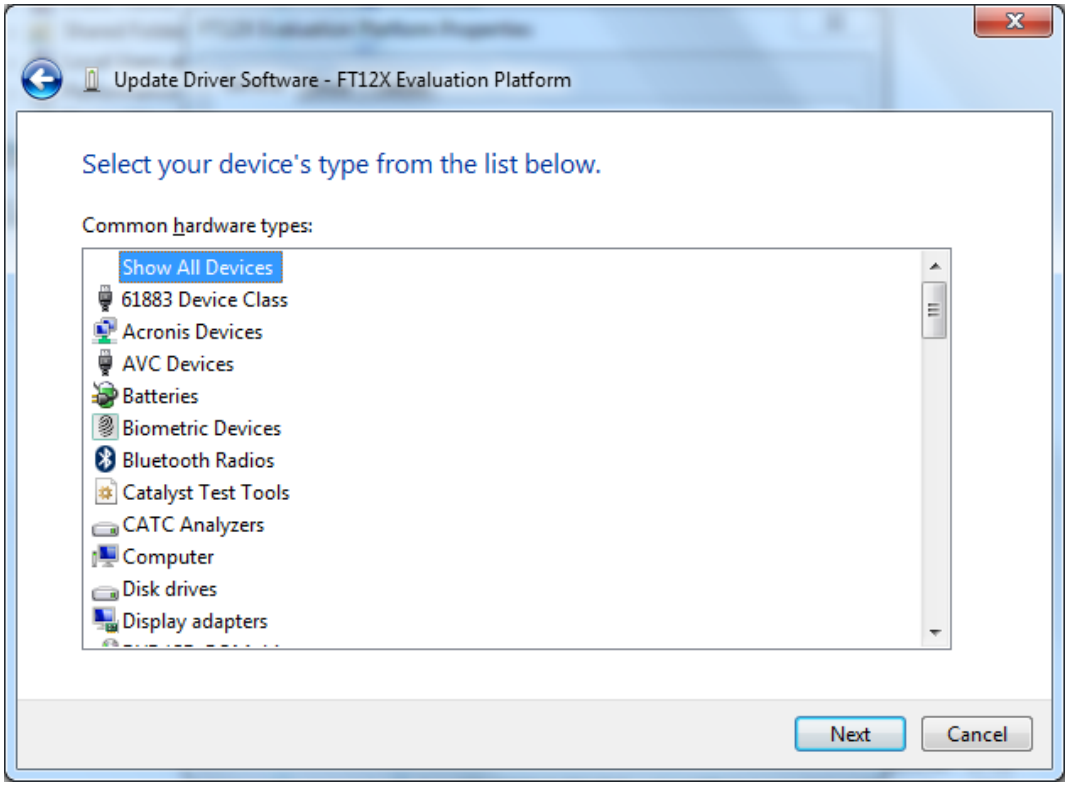

Figure 4-8 Update driver window

- Click "Next"

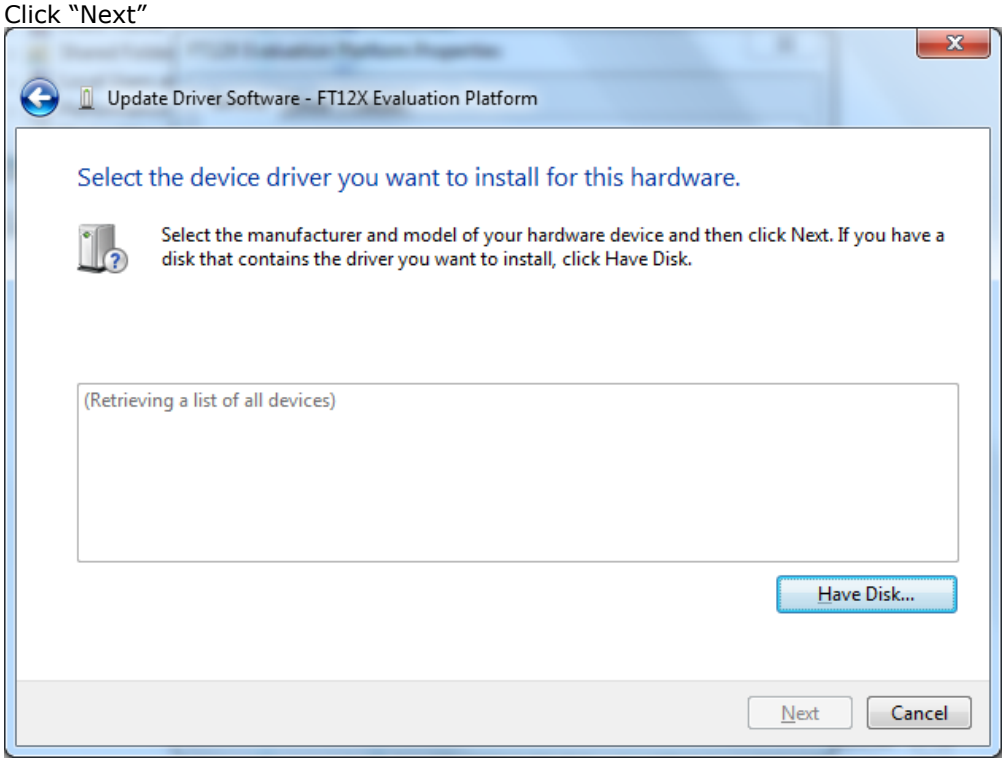

Figure 4-9 Update driver window

- Click "Have Disk…"

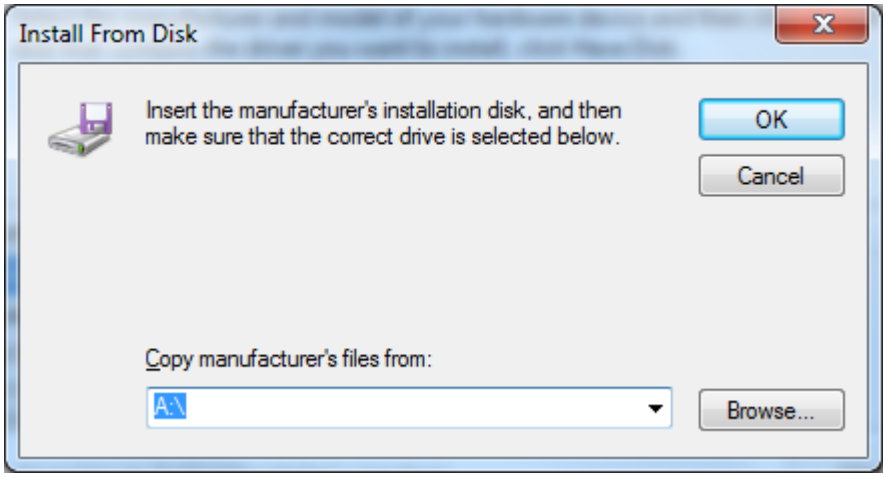

Figure 4-10 Install from disk window

- Click "Browse…", select the downloaded "FT12x.inf" file to load "usbser.sys" driver. Click "OK" and then "'"Next".

- The driver installation started. When completed, the below window is displayed. A COM port number (COM25 in this example) will be assigned to the FT12x CDC interface. Write down this port number as it will be required by the serial loopback test utility. Click "Close" to finish the driver installation.

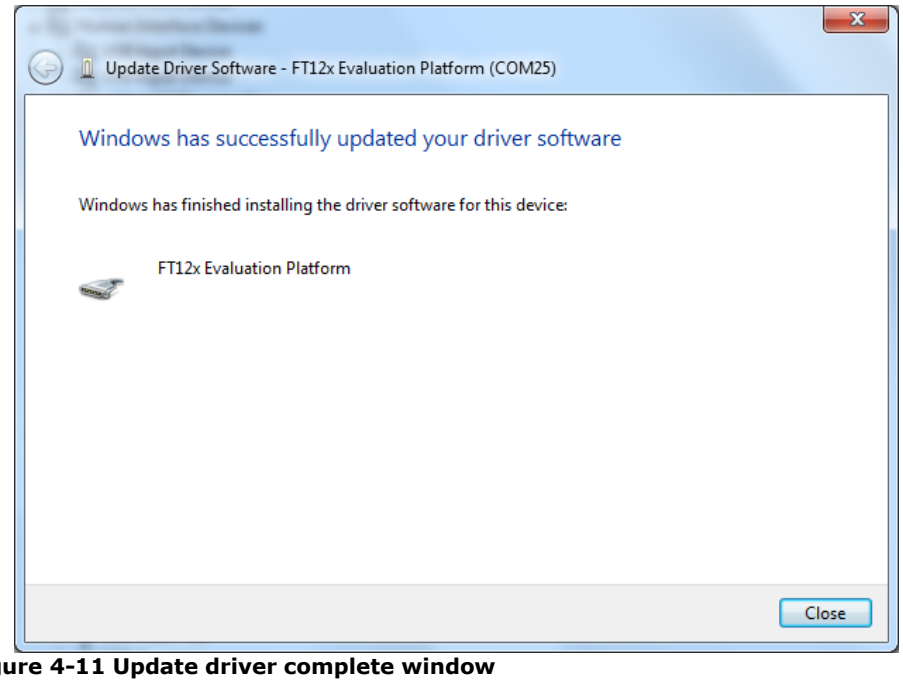

Figure 4-11 Update driver complete window

5 Running demo tests

The UMFT12XEV is pre-loaded with a default firmware. The firmware can auto-detect the daughter card type, and the LPC1114 MCU can communicate to the FT12 series with either SPI(for FT121) or parallel (for FT120 or FT122) protocol. For bus-powered configuration (default setting), the FT12x evaluation kit will power on when the USB cable is plugged in. LED D4 (red) on the main board will be ON, indicating the 3.3V power is ready. The D2 and D3 LEDs (red) will be flashing, indicating the firmware is up and running. For UMFT120DC and UMFT122DC, the LED D1 (green) on the daughter card will be tunred ON upon successful enumeration, and blinking when there are USB transactions.

The default firmware supports USB CDC class driver. Upon enumeration a virtual COM port is present on the PC. User can run serial port applications such as serial loopback test, teraterm, hyperterm etc.

5.1 Serial Loopback test

Follow the steps below to run the serial loopback test over the FT12x USB serial port interface.

- Install the serial loopback test utility. Download v1.10 of the serial loopback test utility at http://www.madsencircuits.com/serial_loopback.html .
- Start the loopback test by clicking All Programs -> Serial Loopback Test -> Serial Loopback Test.
- Select the Serial Port number from the pull-down list. In this example COM25 is selected.
- Click "Start Test" button. The utility will send data to the FT12x USB serial port, receive back from the same serial port, and perform the comparisson of the received data from the sent one. The FT12x Evaluation kit firmware will route all the received data back to the PC internally (the firmware will store the data from bulk OUT endpoint, and send it back when the bulk IN token comes).

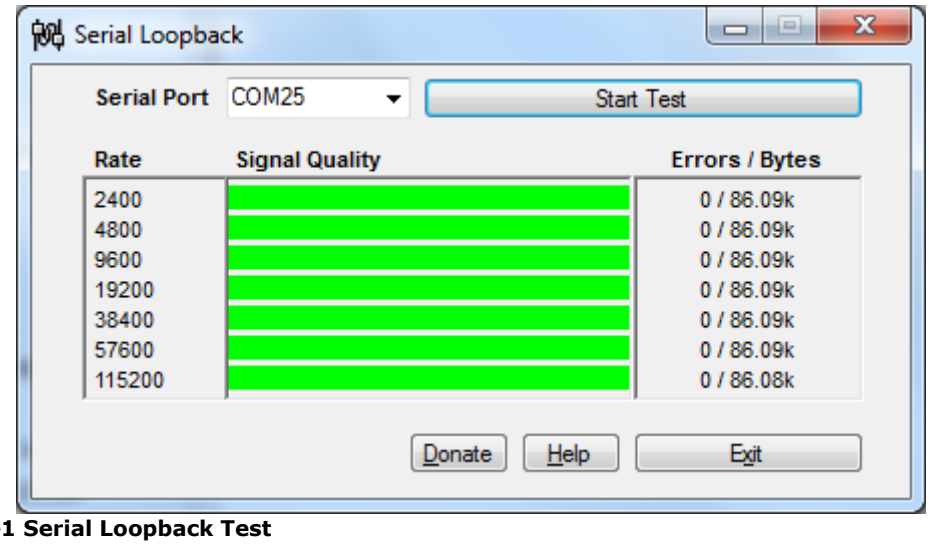

Figure 5-1 Serial Loopback Test

5.2 USB Charger test

The FT121 and FT122 supports USB Charger (Wall Charger or Dedicated Charging Port) detection. The USB Charger shall have micro-B plug with its D+/D- pins shorted.

Follow the steps below to check the USB Charger detection function:

- Connect the USB Charger to the micro-B USB connector of UMFT121DC or UMFT122DC module.
- Plug the USB Charger to the Wall power socket and switch on the power.
- The yellow LED (D1 on the UMFT12XEV main board) will be turned ON. This indicates a USB wall charger or dedicated charging port is connected.

Copyright © 2012 Future Technology Devices International Limited

6 Board Circuit Schematics and BOMs

6.1 UMFT12XEV Schematic and BOM

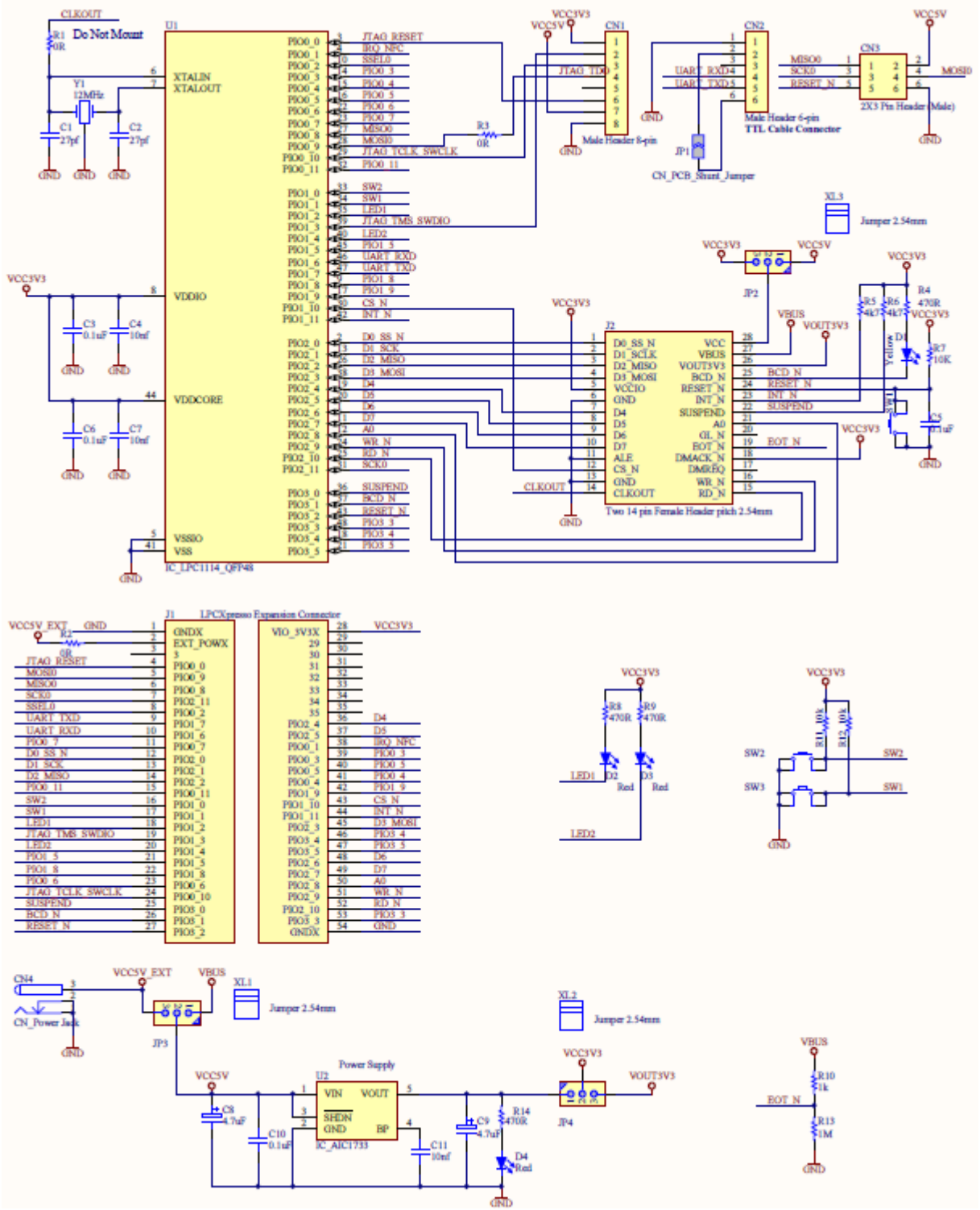

Figure 6-1 UMFT12XEV Circuit Schematic

#	Designator	Comment	Description	ManufacturerPartNo	Manufacturer
1	CN4	Power Jack	Low Voltage Power Supply Connector	PJ-002A	CUI Inc
2	XL1, XL2, XL3	Jumper 2.54mm	2.54mm Shorting Jumper	969102-0000-DA	3M
3	R2, R3	0R	Resistor	RC0603JR-070RL	Yageo
4	R10	1k	Resistor	RC0603JR-071KL	Yageo
5	R13	1M	Resistor	RC0603FR-071ML	Yageo
6	R5, R6	4k7	Resistor	RC0603FR-074K7L	Yageo
7	R7, R11, R12	10K	Resistor	RC0603FR-0710KL	Yageo
8	R4, R8, R9, R14	470R	Resistor	RC0603FR-07470RL	Yageo
9	C4, C7, C11	10nf	CAP CER 10000PF 50V 10% X7R 0603	C0603C103K5RACTU	Kemet
10	C3, C5, C6, C10	0.1uF	Capacitor bipolar	06035C104KAT2A, C0603C104K8RACTU	AVX Corporation, Kemet
11	SW1, SW2, SW3	SW_PB_4PIN	Push button momentary switch	FSM4JH	TE Connectivity
12	C1, C2	27pf	Capacitor bipolar	06035A270JAT2A, 06035C180JAT2A	AVX Corporation
13	C8, C9	4.7uF	CAP TANTALUM 4.7UF 6.3V 20% SMD	TAJA475M006RNJ	AVX Corporation
14	'JP2, JP3, JP4	'SIP-3	'3 contact jumper	'TSW-103-07-T-S	'Samtec Inc
15	U1	IC_LPC1114_QFP48		LPC1114FBD48/302,1	NXP Semiconductors
16	CN2	Male Header 6-pin	CONN HEADER 6POS .100 STR 15AU	68000-206HLF	FCI
17	D2, D3, D4	Red	Typical LED diode	APT2012EC	Kingbright Corp
18	D1	Yellow	Typical LED diode	APT2012SYCK	Kingbright Corp
19	J2	Two 14 pin Female Header pitch 2.54mm	Board to Board / Mezzanine Connectors RECEPTACLE 14P	68685-314LF	FCI
20	U2	IC_AIC1733	500mA, Low Dropout Linear Regulator with Shutdown	AIC1733-33PV	AIC
21	CN3	2X3 Pin Header (Male)	CONN HEADER 6POS .100" DUAL TIN	TSW-103-07-T-D	Samtec Inc
22	CN1	Male Header 8-pin	CONN HEADER 8POS .100" SNGL TIN	TSW-108-07-T-S	Samtec Inc
23	Y1	12MHz		ECS-120-18-4XEN	ECS Inc

Table 6-1 UMFT12XEV BOM list

Note: J1 not mounted.

6.2 UMFT120DC Schematic and BOM

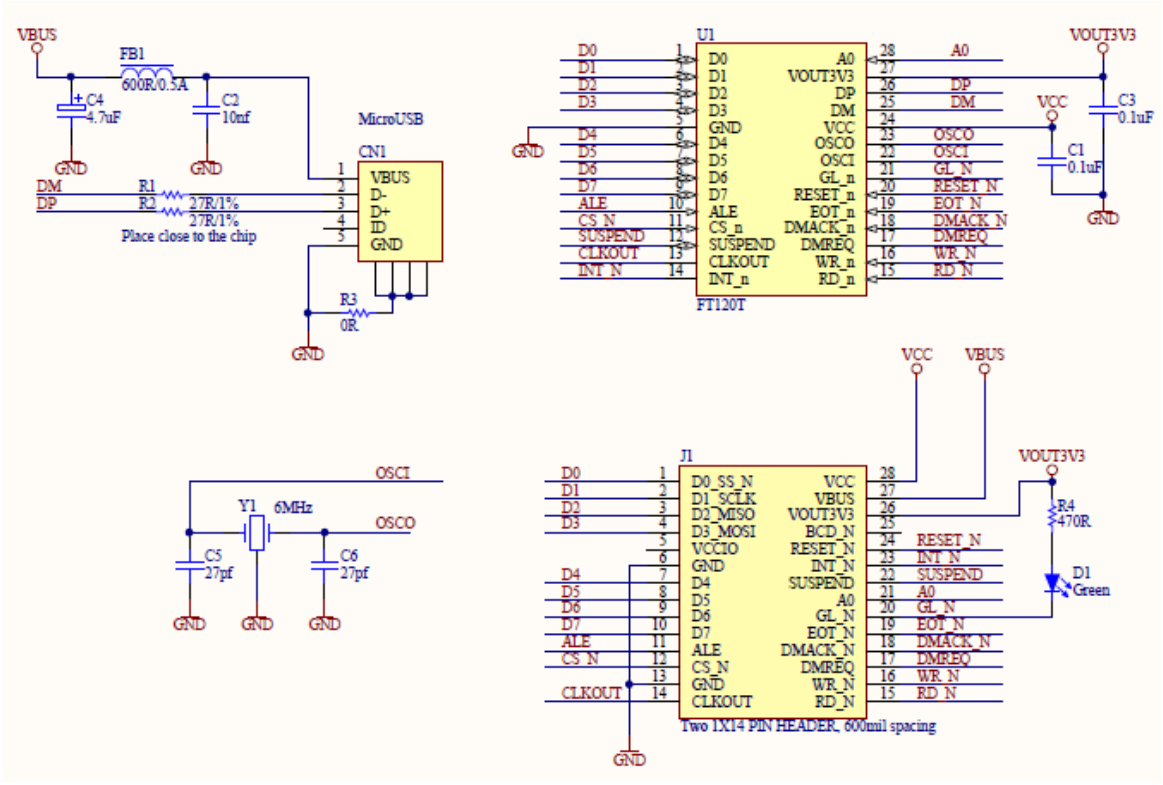

Figure 6-2 UMFT120DC Circuit Schematic

#	Designator	Comment	Description	ManufacturerPartNo	Manufacturer
1	U1	FT120T	FT120 USB device controller with parallel interface, TSSOP-28	FT120T	FTDI Chip
2	CN1	MicroUSB	CONN RCPT STD MICRO USB TYPE B	10104110-0001LF	FCI
3	R1, R2	27R/1%	Resistor	RC0603FR-0727RL	Yageo
4	R3	0R	Resistor	RC0603FR-07000RL	Yageo
5	R4	470R	Resistor	RC0603FR-07470RL	Yageo
6	C2	10nf	CAP CER 10000PF 50V 10% X7R 0603	C0603C103K5RACTU	Kemet
7	FB1	600R/0.5A	Chip Ferrite Bead 0805	MPZ1608S601A	TDK Corporation
8	C5, C6	27pf	Capacitor bipolar	06035A270JAT2A	AVX Corporation
9	C4	4.7uF	Polarized Capacitor	TAJA475K016RNJ	AVX Corporation
10	C1, C3	0.1uF	Capacitor bipolar	06035C104KAT2A	AVX Corporation
11	D1	Green	Typical LED diode	APT2012SGC	Kingbright Corp
12	J1	Two 1X14 PIN HEADER, 600mil spacing	'Headers & Wire Housings 14P SR UNSHRD HRD .76 GOLD OVER NI	68000-114HLF	FCI
13	Y1	6MHz	6.0MHZ CRYSTAL	ECS-60-18-4XEN	ECS Inc

Table 6-2 UMFT120DC BOM list

6.3 UMFT121DC Schematic and BOM

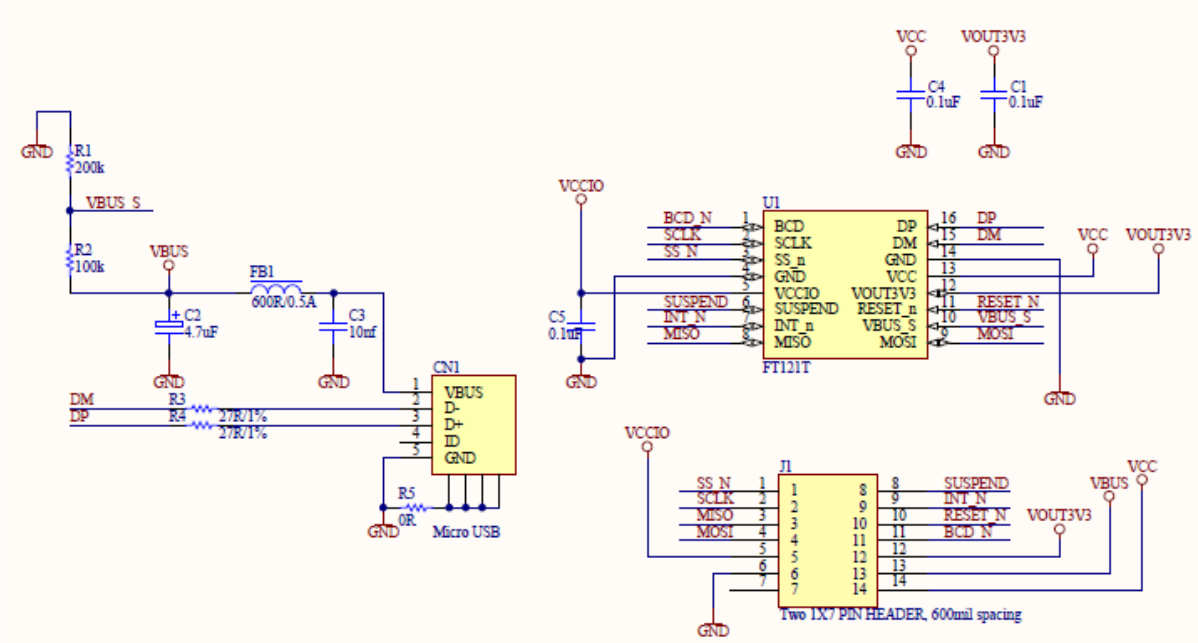

Figure 6-3 UMFT121DC Circuit Schematic

#	Designator	Comment	Description	ManufacturerPartNo	Manufacturer
1	U1	FT121T	FT121 USB device controller with SPI slave, TSSOP-16	FT121T	FTDI Chip
2	CN1	MicroUSB	CONN RCPT STD MICRO USB TYPE B	10104110-0001LF	FCI
3	R3, R4	27R/1%	Resistor	RC0603FR-0727RL	Yageo
4	R2	100k	Resistor	RC0603JR-07100KL	Yageo
5	R1	200k	Resistor	RC0603JR-07200KL	Yageo
6	R5	0R	Resistor	RC0603FR-07000RL	Yageo
7	C3	10nf	CAP CER 10000PF 50V 10% X7R 0603	C0603C103K5RACTU	Kemet
8	FB1	600R/0.5A	Chip Ferrite Bead 0805	MPZ1608S601A	TDK Corporation
9	C2	4.7uF	Polarized Capacitor	TAJA475K016RNJ	AVX Corporation
10	C1, C4, C5	0.1uF	Capacitor bipolar	06035C104KAT2A	AVX Corporation
11	J1	Two 1X7 PIN HEADER, 600mil spacing	'Headers & Wire Housings 7P SR UNSHRD HRD .76 GOLD OVER NI	68000-107HLF	FCI

Table 6-3 UMFT121DC BOM list

6.4 UMFT122DC Schematic and BOM

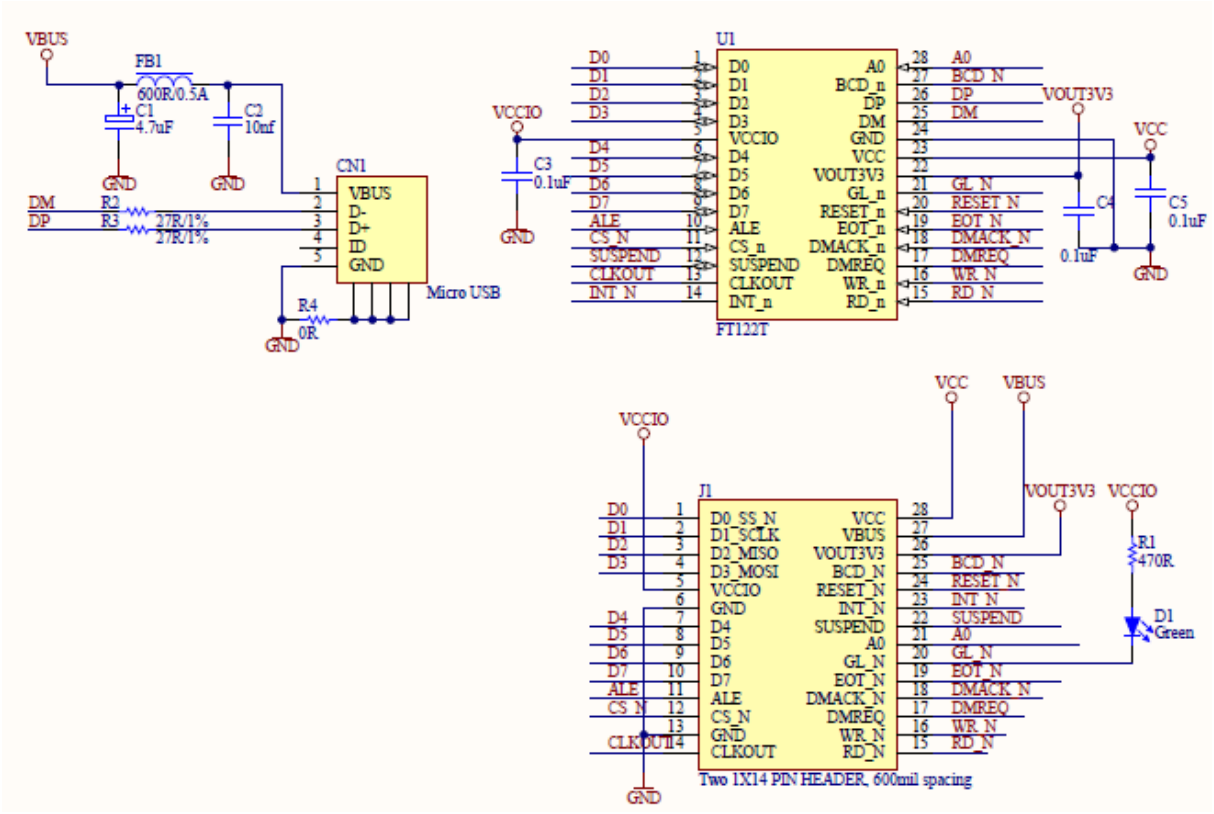

Figure 6-4 UMFT122DC Circuit Schematic

#	Designator	Comment	Description	ManufacturerPartNo	Manufacturer
1	U1	FT122T	Enhanced USB device controller with parallel interface, TSSOP-28	FT122T	FTDI Chip
2	CN1	MicroUSB	CONN RCPT STD MICRO USB TYPE B	10104110-0001LF	FCI
3	R2, R3	27R/1%	Resistor	RC0603FR-0727RL	Yageo
4	R4	0R	Resistor	RC0603FR-07000RL	Yageo
5	R1	470R	Resistor	RC0603FR-07470RL	Yageo
6	C2	10nf	CAP CER 10000PF 50V 10% X7R 0603	C0603C103K5RACTU	Kemet
7	FB1	600R/0.5A	Chip Ferrite Bead 0805	MPZ1608S601A	TDK Corporation
8	C1	4.7uF	Polarized Capacitor	TAJA475K016RNJ	AVX Corporation
9	C3, C4, C5	0.1uF	Capacitor bipolar	06035C104KAT2A	AVX Corporation
10	D1	Green	Typical LED diode	APT2012SGC	Kingbright Corp
11	J1	Two 1X14 PIN HEADER, 600mil spacing	'Headers & Wire Housings 14P SR UNSHRD HRD .76 GOLD OVER NI	68000-114HLF	FCI

Table 6-4 UMFT122DC BOM list

7 Firmware Upgrade Process

The firmware for the on-board microcontroller LPC1114 can be upgraded through either UART (ISP mode) or JTAG/SWD interface. This section will describe the steps on how to download the firmware through ISP mode. For the usage of JTAG/SWD interface with LPC-Link debug module, please refer to NXP LPCXpresso homepage at http://ics.nxp.com/lpcxpresso/. Note that the LPCXpresso is an integrated development platform for firmware development, debug and download for NXP's ARM-based LPC microcontrollers. The LPCXpresso development tool chain can be downloaded from http://lpcxpresso.code-red-tech.com/LPCXpresso/ .

Check the FTDI website for the available pre-compiled firmware for FT12x Evaluation Kit (http://www.ftdichip.com/Firmware/Precompiled.htm).

7.1 Put LPC1114 microcontroller in ISP mode

- Use a jumper wire to short pad 38 of J1 to pad 1 or pad 54 of J1. This is to connect the LPC1114 P0_1 pin to GND so that LPC1114 will enter ISP mode after power on or reset.

- Connect the board to the test PC via the micro-USB cable. The USB–A plug shall be inserted in the PC USB port, while the micro-USB-B plug shall be connected to the daughter card USB port. The board will be powered on with the LPC1114 entering ISP mode. Note for self power configuration the daughter card is not required to be present for firmware upgrading. For bus power configuration the daughter card is required as the power comes from the daughter card USB port.

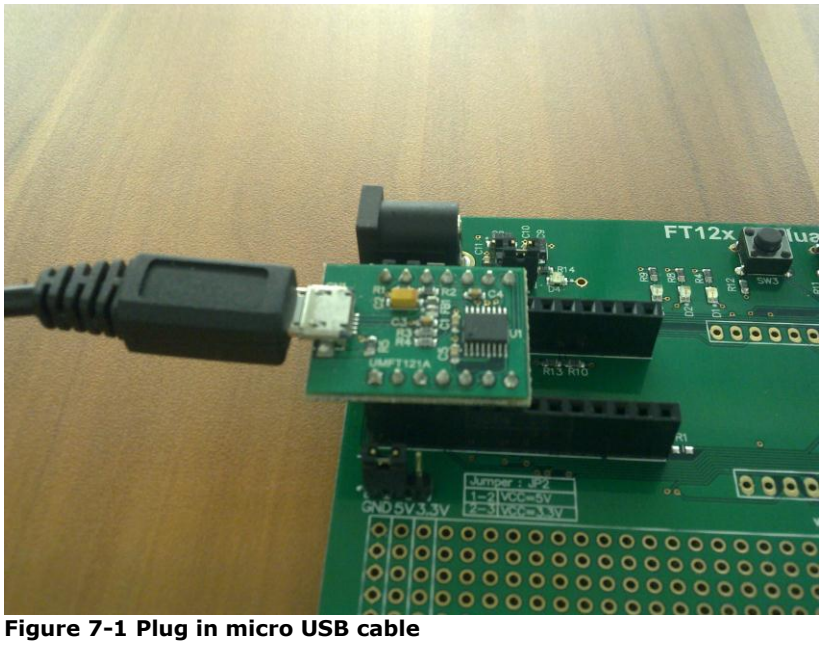

Figure 7-1 Plug in micro USB cable

7.2 Connect the TTL-232R-3V3 cable

- Connect the board to the test PC using a TTL-232R-3V3 cable. Plug the 6-pin socket of the cable into the CN2 pin header. Please note the direction of the cable, the black wire (GND) should be plugged in to pin 1 of CN2.
- Connect the other end of the TTL-232R-3V3 cable to a USB port of the test PC

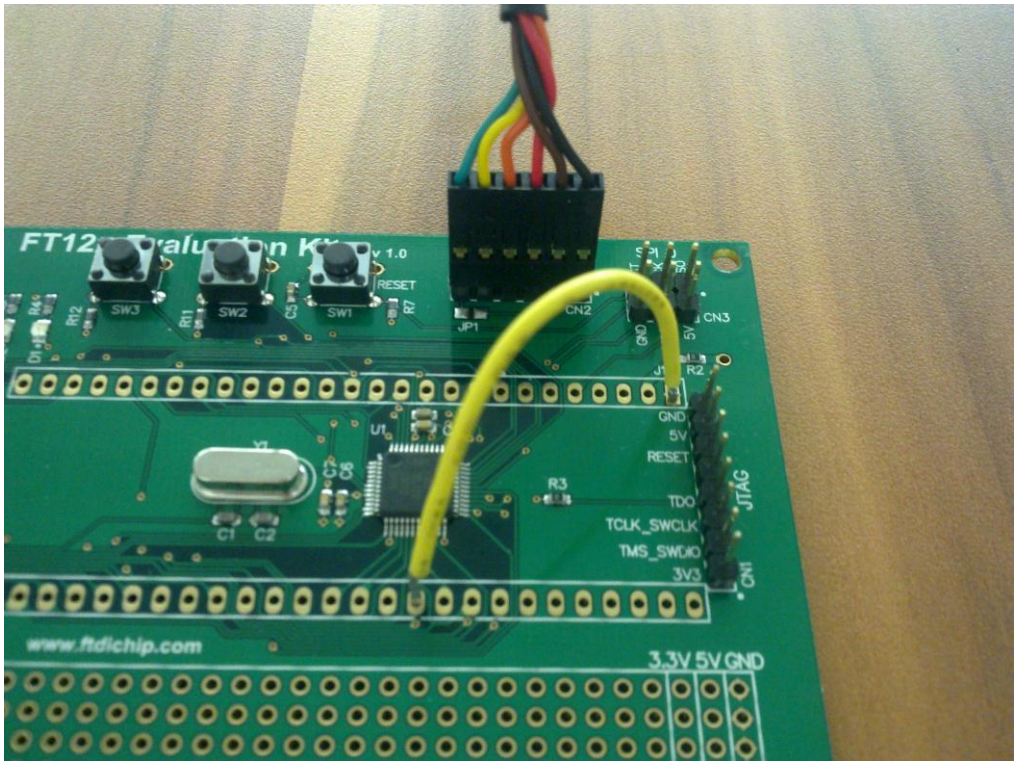

Figure 7-2 Connect TTL-232R-3V3 UART cable

7.3 Upgrade firmware

- Download and install the driver for the FTDI TTL-232R-3V3 cable. Refer to the cable datasheet for details (http://www.ftdichip.com/Support/Documents/DataSheets/Cables/DS_TTL-232R_CABLES.pdf)
- Download the Flash Magic firmware programming utility from http://www.flashmagictool.com.
- Install the utility on test PC by running "FlashMagic.exe"
- Once installation is complete, launch the utility from Start -> All Programs -> Flash Magic -> Flash Magic.
- Configure the tool by the following steps:
    - Click "Select Device…", choose LPC1114/302 from the popup window and click OK
    - COM port: select the COM port number associated with the TTL-232R-3V3 cable. The COM port number can be found in the "Device Manager -> Ports (COM & LPT) -> USB Serial Port (COM3)". Note on different PC this number can be changed.
    - Interface: select "FTDI USB-Dongle" from the pull-down list.
    - Oscillator (MHz): key in '12'.
    - Tick the box "Erase blocks used by Hex File".
    - Select Hex File: browse to select the desired firmware binary hex file (ie "LPC1114-FT12x.hex").
    - Tick the box "Verify after programming"
    - The tool is configured ready for firmware downloading.
- Click "Start" button and the firmware download will begin. Typically the download takes about 2 minutes. Once completed, a 'finished' message will be displayed in the status bar (bottom side), and the green download progress bar will reach 100%. Note the 'finished' message may disappear after a while. If no message is displayed in the status bar after a few minutes, this also indicates that the previous download is completed.
- Power off the board. Remove the ISP jumper wire and then power on the board again. The new firmware will take effect.

Copyright © 2012 Future Technology Devices International Limited

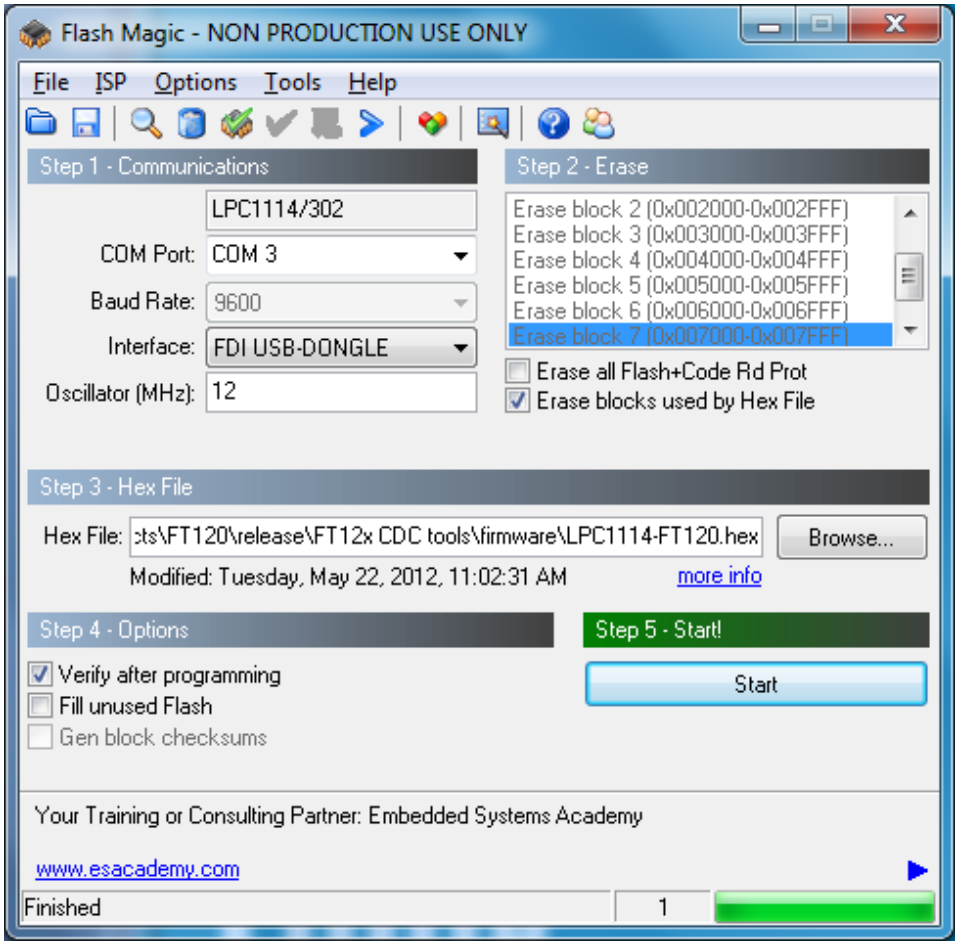

Figure 7-3 Flash Magic configuration

8 Environmental Compliances

The UMFT12XEV main board and UMFT12XDC daughter boards exclusively use lead free components, and are fully compliant with European Union directive 2002/95/EC.

9 Contact Information

Head Office – Glasgow, UK

Future Technology Devices International Limited
Unit 1, 2 Seaward Place, Centurion Business Park
Glasgow G41 1HH
United Kingdom
Tel: +44 (0) 141 429 2777
Fax: +44 (0) 141 429 2758

E-mail (Sales) sales1@ftdichip.com
E-mail (Support) support1@ftdichip.com
E-mail (General Enquiries) admin1@ftdichip.com

Branch Office – Hillsboro, Oregon, USA

Future Technology Devices International Limited (USA)
7130 SW Fir Loop
Tigard, OR 97223
USA
Tel: +1 (503) 547 0988
Fax: +1 (503) 547 0987

E-Mail (Sales) us.sales@ftdichip.com
E-Mail (Support) us.support@ftdichip.com
E-Mail (General Enquiries) us.admin@ftdichip.com

Branch Office – Taipei, Taiwan

Future Technology Devices International Limited (Taiwan)
2F, No. 516, Sec. 1, NeiHu Road
Taipei 114
Taiwan , R.O.C.
Tel: +886 (0) 2 8791 3570
Fax: +886 (0) 2 8791 3576

E-mail (Sales) tw.sales1@ftdichip.com
E-mail (Support) tw.support1@ftdichip.com
E-mail (General Enquiries) tw.admin1@ftdichip.com

Branch Office – Shanghai, China

Future Technology Devices International Limited (China)
Room 1103, No. 666 West Huaihai Road,
Shanghai, 200052
China
Tel: +86 (0)21 6235 1596
Fax: +86 (0)21 6235 1595

E-mail (Sales) cn.sales@ftdichip.com
E-mail (Support) cn.support@ftdichip.com
E-mail (General Enquiries) cn.admin@ftdichip.com

Web Site

http://ftdichip.com

Distributor and Sales Representatives

Please visit the Sales Network page of the FTDI Web site for the contact details of our distributor(s) and sales representative(s) in your country.

System and equipment manufacturers and designers are responsible to ensure that their systems, and any Future Technology Devices International Ltd (FTDI) devices incorporated in their systems, meet all applicable safety, regulatory and system-level performance requirements. All application-related information in this document (including application descriptions, suggested FTDI devices and other materials) is provided for reference only. While FTDI has taken care to assure it is accurate, this information is subject to customer confirmation, and FTDI disclaims all liability for system designs and for any applications assistance provided by FTDI. Use of FTDI devices in life support and/or safety applications is entirely at the user's risk, and the user agrees to defend, indemnify and hold harmless FTDI from any and all damages, claims, suits or expense resulting from such use. This document is subject to change without notice. No freedom to use patents or other intellectual property rights is implied by the publication of this document. Neither the whole nor any part of the information contained in, or the product described in this document, may be adapted or reproduced in any material or electronic form without the prior written consent of the copyright holder. Future Technology Devices International Ltd, Unit 1, 2 Seaward Place, Centurion Business Park, Glasgow G41 1HH, United Kingdom. Scotland Registered Company Number: SC136640

Appendix A - List of Figures and Tables

List of Figures

Figure 3-1 UMFT12XEV main board 4
Figure 3-2 UMFT120DC daughter board 4
Figure 3-3 UMFT121DC daughter board 6
Figure 3-4 UMFT122DC daughter board 7
Figure 3-5 Micro-B to Standard-A cable 8
Figure 3-6 TTL-232R-3V3 USB cable 8
Figure 3-7 LPC-Link debugger module 9
Figure 4-1 Plug the daughter board module to the main board 10
Figure 4-2 JP2 default setting 11
Figure 4-3 JP3 and JP4 default setting 11
Figure 4-4 Device manager window 12
Figure 4-5 Drive property window 12
Figure 4-6 Update driver window 13
Figure 4-7 Update driver window 13
Figure 4-8 Update driver window 14
Figure 4-9 Update driver window 14
Figure 4-10 Install from disk window 15
Figure 5-1 Serial Loopback Test 16
Figure 6-1 UMFT12XEV Circuit Schematic 18
Figure 6-2 UMFT120DC Circuit Schematic 20
Figure 6-3 UMFT121DC Circuit Schematic 21
Figure 6-4 UMFT122DC Circuit Schematic 22
Figure 7-1 Plug in micro USB cable 24
Figure 7-2 Connect TTL-232R-3V3 UART cable 24
Figure 7-3 Flash Magic configuration 25

List of Tables

Table 2-1 Ordering information 1
Table 3-1 UMFT120DC J1 Pin Out Description 5
Table 3-2 UMFT121DC J1 Pin Out Description 6
Table 3-3 UMFT122DC J1 Pin Out Description 8
Table 4-1 Default setting of the jumpers 10
Table 6-1 UMFT12XEV BOM list 19
Table 6-2 UMFT120DC BOM list 20

Copyright © 2012 Future Technology Devices International Limited

Table 6-3 UMFT121DC BOM list 21
Table 6-4 UMFT122DC BOM list 22
Table A-1 Abbreviations 29
Table A-2 References 29

Appendix B – Abbreviations and References

Term	Description
CDC	Communications Device Class
DUT	Device Under Test
GPIO	General Purpose Input/Output
HID	Human Interface Device
ISP	In System Program
JTAG	Joint Test Action Group
LED	Light Emitting Diode
MCU	Micro Controller Unit
OS	Operating System
PCB	Printed Circuit Board
SPI	Serial Parallel Interface
SWD	Serial Wire Debug
UART	Universal Asynchronous Receiver/Transmitter
USB	Universal Serial Bus
VCP	Virtual COM Port

Table A-1 Abbreviations

Title	Description
FT_000646	FT120 IC data sheet
FT_000648	FT121 IC data sheet
FT_000647	FT122 IC data sheet
AN_209	PDIUSBD12 to FT120 Migration Guide
AN_225	FT12x firmware programming guide
TTL-232R-3V3 USB cable	USB to UART converter cable. Refer to http://www.ftdichip.com/Products/Cables/USBTTLSerial.htm
Serial Loopback test utility	http://www.madsencircuits.com/serial_loopback.html
Flash Magic	LPC microcontroller firmware programming tool. Refer to http://www.flashmagictool.com
LPCXpresso	LPC microcontroller integrated development platform. Refer to http://ics.nxp.com/lpcxpresso/ and http://lpcxpresso.code-red-tech.com/LPCXpresso/

Table A-2 References

Copyright © 2012 **Future Technology Devices International Limited**

Appendix C - Revision History

Document Title:	DS_UMFT12xA FT12 Series Evaluation Kit datasheet
Document Reference No.:	FT_000728
Clearance No.:	FTDI#314
Product Page:	http://www.ftdichip.com/Products/Modules/DevelopmentModules.htm
Document Feedback:	Send Feedback

Version 1.0 1.0 Created 03/09/2012