Future Technology Devices International Ltd

Datasheet

UMFT234XF Development Module



UMFT234XF is a USB to UART development module

1 Introduction

The UMFT234XF development module utilizes FTDI's FT234XD IC to convert USB to a basic UART (RXD, TXD, RTS#, CTS#).

1.1 Features

The UMFT234XF is a development module that converts USB2.0 Full-Speed to UART. The module includes a micro-B USB connector to connect to a USB host and the UART IO are available on separate pads. The module is designed to be soldered directly to another PCB (PCB on PCB technology).

The UART interface operates between +1.8V and +3.3V voltage levels depending on the VIO signal, however all I/Os are 5V tolerant.

An additional configurable bus (CBUS) pad allows for general IO or indicating that the module is connected to a dedicated charging port for battery charging.

1.2 Ordering Information

Module	Interface	Features
UMFT234XF	UART	USB 2.0 full speed to basic UART with one control bus line which may be used for battery charger detection. The PCB pads are designed to be soldered directly to another PCB for secure bonding.

Use of FTDI devices in life support and/or safety applications is entirely at the user's risk, and the user agrees to defend, indemnify and hold harmless FTDI from any and all damages, claims, suits or expense resulting from such use.

2 Driver Support

Royalty-Free VIRTUAL COM PORT (VCP):

- Windows 8 32,64-bit
- Windows 7 32,64-bit
- Windows Vista
- Windows XP 32,64-bit
- Windows XP Embedded
- Windows CE.NET 4.2 , 5.0 and 6.0
- MAC OS OS-X
- Linux 3.0 and greater
- Android

Royalty-Free D2XX Direct Drivers:

- Windows 8 32,64-bit
- Windows 7 32,64-bit
- Windows Vista
- Windows XP 32,64-bit
- Windows XP Embedded
- Windows CE.NET 4.2, 5.0 and 6.0
- MAC OS OS-X
- Linux 3.0 and greater
- Android

The drivers listed above as well as Third Party Drivers for other operating systems are available for free downloads from www.ftdichip.com.

Copyright © **2013** Future Technology Devices International Limited

Table of Contents

1 Introduction 1
1.1 Features 1
1.2 Ordering Information 1
2 Driver Support 2
3 UMFT234XF Signals and Configurations 4
3.1 UMFT234XF CN1 Signal Descriptions 4
3.2 UMFT234XF PAD Signal Descriptions 4
3.3 UMFT234XF J-1 4
4 CBUS Signal Options 5
4.1 Configuring the MTP ROM 6
5 Module Dimensions 7
6 Module Circuit Schematic 8
6.1 UMFT234XF Schematic 8
7 Environmental Compliances 9
8 Internal MTP ROM Configuration 10
9 Contact Information 11
Appendix A - List of Figures and Tables 9
Appendix B: Revision History 10

Copyright © **2013** Future Technology Devices International Limited

3 UMFT234XF Signals and Configurations

USB connectivity is via CN1 a micro-B USB connector. The UART and CBUS signals are available on PCB pads.

3.1 UMFT234XF CN1 Signal Descriptions

Pin No.	Name	Type	Description
1	VBUS	PWR	5V Power input to USB port, for a USB bus low-powered design; up to 100mA may be sourced from the 5V supply on the USB bus. A maximum of 500mA can be sourced from the USB bus in a USB bus high-powered design.
2	D-	Signal	Negative USB data signal
3	D+	Signal	Positive USB data signal
4	ID	Signal	Not Connected
5	GND	PWR	Module Ground

Table 1 USB Connector Pin Out Description

3.2 UMFT234XF PAD Signal Descriptions

Pad No.	Name	Type	Description
P1	RESET#	Signal	Active low input may be used to reset the FT234XD IC
P2	3V3	PWR	3V3OUT from FT234XD. May be used for external logic. (50mA max) Also powers the FT234XD VCCIO (if JP1 fitted (default)
P3	VIO	PWR	Optional input to supply the FT234XD VCCIO from an external supply. VIO may be between 1.8V to 3.3V. JP1 must be disconnected to use this input.
P4	GND	PWR	Module GND
P5	VBUS	PWR	5V output supplied from the USB port.
P6	CB0	Signal	Configurable Bus pin 0. Available settings for the pin are defined in table 3. The default is PWREN#
P7	TXD	Signal	UART data output signal
P8	RTS#	Signal	UART Ready to Send output signal. Active low.
P9	RXD	Signal	UART data input signal
P10	CTS#	Signal	UART Clear to Send input signal. Active low.

Table 2 USB Connector Pin Out Description

3.3 UMFT234XF J-1

J-1 is used to connect/disconnect the 3V3OUT frm the FT234XD IC to the VCCIO input pin. By default it is connected.

Copyright © **2013** Future Technology Devices International Limited

4 CBUS Signal Options

CBUS Signal Option	Available On CBUS Pin	Description
Tristate	CBUS0	IO Pad is tri-stated
DRIVE_1	CBUS0	Output a constant 1
DRIVE_0	CBUS0	Output a constant 0
TXDEN	CBUS0	Enable transmit data for RS485
PWREN#	CBUS0	Output is low after the device is configured by USB but high during USB suspended mode. This output is used to control power to external logic.
TXLED#	CBUS0	Transmit data LED drive – open drain pulses low when transmitting data via UART.
RXLED#	CBUS0	Receive data LED drive – open drain pulses low when receiving data via UART.
TX&RXLED#	CBUS0	LED drive – open drain pulses low when transmitting or receiving data via UART.
SLEEP#	CBUS0	Goes low during USB suspend mode. Typically used to power down external logic to RS232 level converter IC in USB to RS232 converter designs
CLK24MHz	CBUS0	24 MHz Clock output.**
CLK12MHz	CBUS0	12 MHz Clock output.**
CLK6MHz	CBUS0	6 MHz Clock output.**
GPIO	CBUS0	CBUS bit bang mode option. Allows up to 4 of the CBUS pins to be used as general purpose I/O. A separate application note, AN232R-01, available from FTDI website (www.ftdichip.com) describes in more detail how to use CBUS bit bang mode.
BCD_Charger	CBUS0	Battery Charge Detect indicates when the device is connected to a dedicated battery charger host. Active high output. NOTE: Requires a 10K pull-down to remove power up toggling.
BCD_Charger#	CBUS0	Active low BCD Charger, driven by an open drain to ground with no internal pull-up.
BitBang_WR#	CBUS0	Synchronous and asynchronous bit bang mode WR# strobe output.
BitBang_RD#	CBUS0	Synchronous and asynchronous bit bang mode RD# strobe output.
VBUS_Sense	CBUS0	Input to detect when VBUS is present.
Time_Stamp	CBUS0	Toggle signal which changes state each time a USB SOF is received
Keep_Awake#	CBUS0	Active Low input, prevents the chip from going into suspend.

Table 3 CBUS Configuration Control

* PWREN# must be used with a 10kΩ resistor pull up.

**When in USB suspend mode the outputs clocks are also suspended.

Copyright © **2013** Future Technology Devices International Limited

4.1 Configuring the MTP ROM

The FT234XD IC on the module contains an embedded MTP ROM, this can be used to specify the USB descriptors, the functions of the CBUS0 pin, the current drive on each signal pin and the current limit for the device. These features can be programmed using FTDI's programming utility FT_Prog. For details on using FT_Prog, please see the FT_PROG User Guide.

When programming the MTP ROM please note:

i) The Max Bus Power setting of the MTP ROM should specify the maximum current to be drawn from the USB host/hub when enumerated. For high-powered USB devices the current limit when enumerated is between 100mA and 500mA, for low-powered USB devices the current limit is 100mA.

Copyright © **2013** Future Technology Devices International Limited

5 Module Dimensions

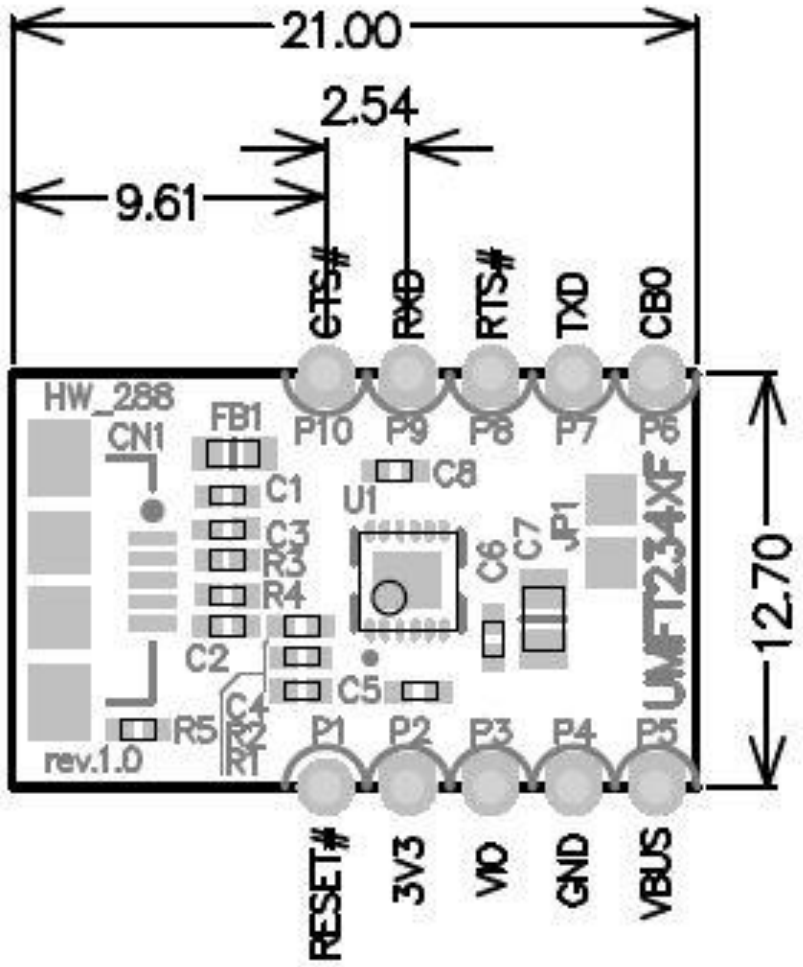

Measurements given in millimetres

Tolerance of +/- 0.1mm

Figure 1 UMFT234XF-01 Module Dimensions

Copyright © **2013** Future Technology Devices International Limited

6 Module Circuit Schematic

6.1 UMFT234XF Schematic

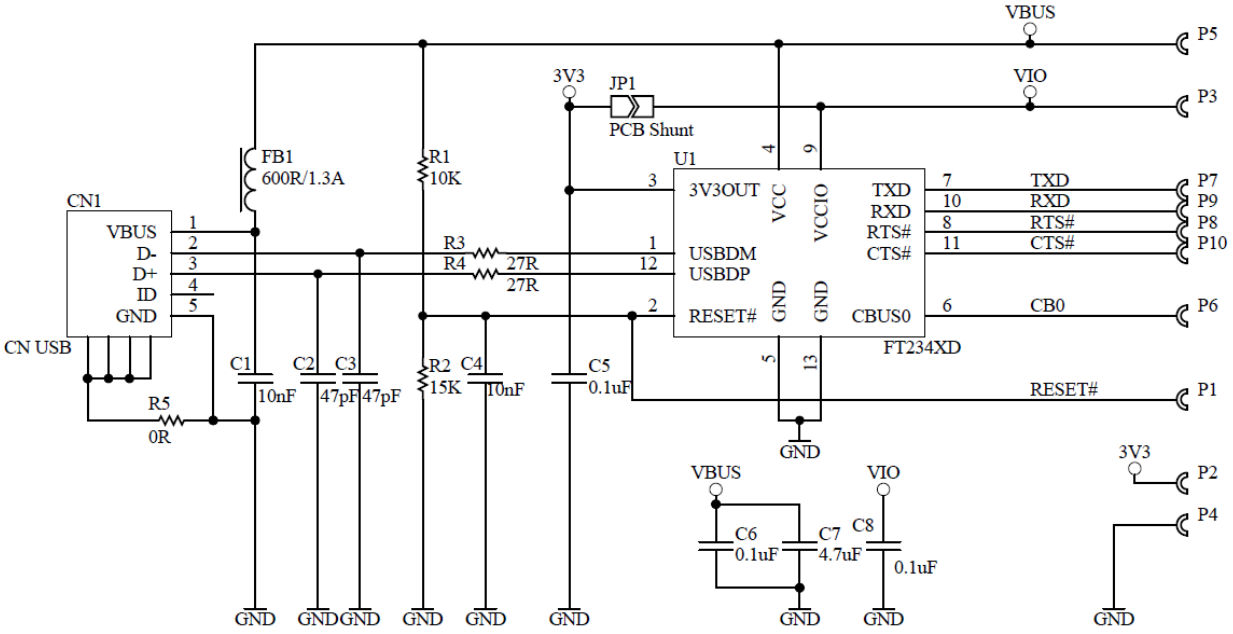

Figure 2 UMFT234XF Circuit Schematic

Copyright © **2013** Future Technology Devices International Limited

7 Environmental Compliances

The UMFT234XF modules exclusively use lead free components, and are fully compliant with European Union directive 2002/95/EC.

Copyright © **2013** Future Technology Devices International Limited

8 Internal MTP ROM Configuration

Following a power-on reset or a USB reset the FT234XD will scan its internal MTP ROM and read the USB configuration descriptors stored there. The default values programmed into the internal MTP ROM in the FT234XD used on the UMFT234XF are in table 4.

Parameter	Value	Notes
USB Vendor ID (VID)	0403h	FTDI default VID (hex)
USB Product ID (PID)	6015h	FTDI default PID (hex)
Serial Number Enabled?	Yes	
Serial Number	See Note	A unique serial number is generated and programmed into the MTP ROM during final test of the UMFT234XF module.
Pull down I/O Pins in USB Suspend	Disabled	Enabling this option will make the device pull down on the UART interface lines when the power is shut off (PWREN# is high).
Manufacturer Name	FTDI	
Product Description	UMFT234XF	
Max Bus Power Current	90mA	
Power Source	Bus Powered	
Device Type	FT234XD	
USB Version	0200	Returns USB 2.0 device description to the host. Note: The device is a USB 2.0 Full Speed device (12Mb/s).
Remote Wake Up	Enabled	Taking RI# low will wake up the USB host controller from suspend.
High Current I/Os	Disabled	Enables the high drive level on the serial and CBUS I/O pins.
Load VCP Driver	Enabled	Makes the device load the VCP driver interface for the device.
CBUS0	PWREN#	

Table 4 Default Internal MTP ROM Configuration

The internal MTP ROM in the FT234XD can be programmed over USB using the utility program FT_PROG. FT_PROG can be downloaded from www.ftdichip.com. Users who do not have their own USB vendor ID but who would like to use a unique Product ID in their design can apply to FTDI for a free block of unique PIDs. Contact FTDI Support (support1@ftdichip.com) for this service.

Copyright © **2013** Future Technology Devices International Limited

9 Contact Information

Head Office – Glasgow, UK

Future Technology Devices International Limited
Unit 1, 2 Seaward Place, Centurion Business Park
Glasgow G41 1HH
United Kingdom
Tel: +44 (0) 141 429 2777
Fax: +44 (0) 141 429 2758

E-mail (Sales) sales1@ftdichip.com
E-mail (Support) support1@ftdichip.com
E-mail (General Enquiries) admin1@ftdichip.com

Branch Office – Taipei, Taiwan

2F, No. 516, Sec. 1, NeiHu Road
Taipei 114
Taiwan, R.O.C.
Tel: +886 (0) 2 8791 3570
Fax: +886 (0) 2 8791 3576

E-mail (Sales) tw.sales1@ftdichip.com
E-mail (Support) tw.support1@ftdichip.com
E-mail (General Enquiries) tw.admin1@ftdichip.com

Branch Office – Oregon, USA

7130 SW Fir Loop
Tigard, OR 97223-8160
USA
Tel: +1 (503) 547 0988
Fax: +1 (503) 547 0987

E-Mail (Sales) us.sales@ftdichip.com
E-Mail (Support) us.support@ftdichip.com
E-Mail (General Enquiries) us.admin@ftdichip.com

Branch Office – Shanghai, China

Room 1103, No. 666 West Huaihai Road,
Shanghai, 200052
China
Tel: +86 (0)21 6235 1596
Fax: +86 (0)21 6235 1595

E-mail (Sales) cn.sales@ftdichip.com
E-mail (Support) cn.support@ftdichip.com
E-mail (General Enquiries) cn.admin@ftdichip.com

Web Site

http://ftdichip.com

Distributor and Sales Representatives

Please visit the Sales Network page of the FTDI Web site for the contact details of our distributor(s) and sales representative(s) in your country.

System and equipment manufacturers and designers are responsible to ensure that their systems, and any Future Technology Devices International Ltd (FTDI) devices incorporated in their systems, meet all applicable safety, regulatory and system-level performance requirements. All application-related information in this document (including application descriptions, suggested FTDI devices and other materials) is provided for reference only. While FTDI has taken care to assure it is accurate, this information is subject to customer confirmation, and FTDI disclaims all liability for system designs and for any applications assistance provided by FTDI. Use of FTDI devices in life support and/or safety applications is entirely at the user's risk, and the user agrees to defend, indemnify and hold harmless FTDI from any and all damages, claims, suits or expense resulting from such use. This document is subject to change without notice. No freedom to use patents or other intellectual property rights is implied by the publication of this document. Neither the whole nor any part of the information contained in, or the product described in this document, may be adapted or reproduced in any material or electronic form without the prior written consent of the copyright holder. Future Technology Devices International Ltd, Unit 1, 2 Seaward Place, Centurion Business Park, Glasgow G41 1HH, United Kingdom. Scotland Registered Company Number: SC136640

Copyright © **2013** Future Technology Devices International Limited

Appendix A - List of Figures and Tables

List of Figures

Figure 1 UMFT234XF-01 Module Dimensions 7
Figure 2 UMFT234XF Circuit Schematic 8

List of Tables

Table 1 USB Connector Pin Out Description 4
Table 2 CBUS Configuration Control 5
Table 3 Default Internal MTP ROM Configuration 10

Copyright © 2013 Future Technology Devices International Limited

Appendix B: Revision History

Document Title:	UMFT234XF
Document Reference No.:	FT_000818
Clearance No.:	FTDI# 337
Product Page:	http://www.ftdichip.com/FT-X.htm
Document Feedback:	Send Feedback

Version 1.0	Initial Datasheet Created	09/04/13

Copyright © 2013 Future Technology Devices International Limited