Future Technology
Devices International Ltd.

VINCULUM

BINDING USB TECHNOLOGIES

VF2F2

USB Flash Disk File-to-file Transfer

Vinculum Evaluation Kit

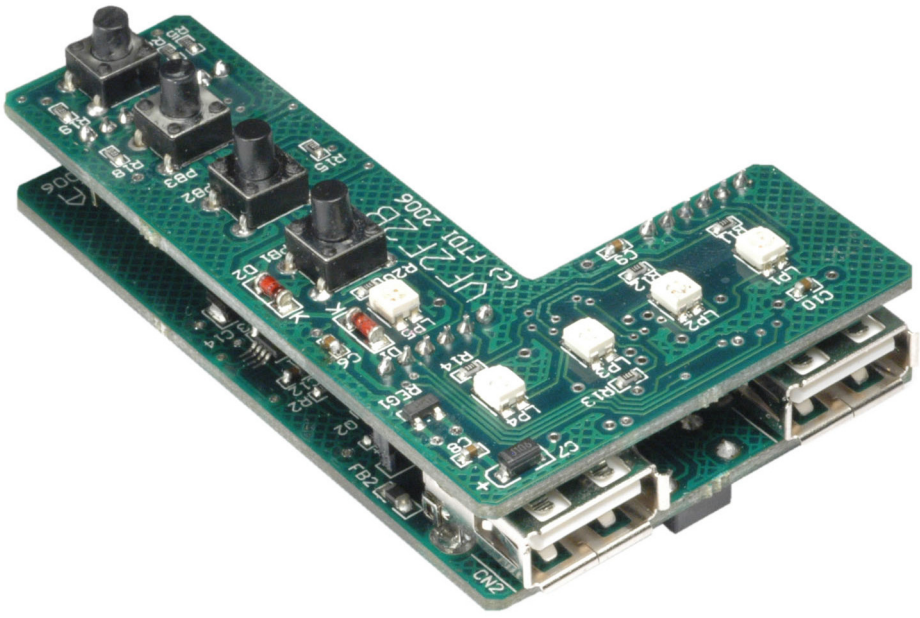

http://www.vinculum.com

Copyright © Future Technology Devices International Ltd. 2007

1. Introduction and Features

1.1 Introduction

The VF2F2 is a reference design for the Vinculum VNC1L . It is designed as a stand alone application which allows for the back up of files from a digital camera onto a USB Flash disk. The project is also available from FTDI as an evaluation kit. This datasheet describes the VF2F2 reference design and evaluation kit, as well as the VNC1L firmware (VDFC) which it uses.

The VF2F2 illustrates how to construct a file backup device for a digital camera with USB Mass storage class interface. At the push of a button, all the picture files on the camera are copied to a unique folder on a USB Flash disk so that the digital camera memory can be re-used to take further pictures. This is an ideal accessory for digital camera users who wish to backup their photos on the road without having to carry a notebook PC, or for people who want to share or swap their photos without requiring a card reader. The VF2F2 is powered by two AAA size alkaline batteries. In addition this reference design and evaluation kit could be used with other USB mass storage class devices such as MP3 players, or even for copying files directly from one USB flash disk onto another.

The Vinculum VNC1L is the first of F.T.D.I.'s Vinculum family of Embedded USB host controller integrated circuit devices. Not only is it able to handle the USB Host Interface, and data transfer functions but owing to the inbuilt MCU and embedded Flash memory, Vinculum can encapsulate the USB device classes as well. When interfacing to mass storage devices such as USB Flash drives, Vinculum also transparently handles the FAT File structure communicating via UART, SPI or parallel FIFO interfaces via a simple to implement command set. Vinculum provides a new cost effective solution for providing USB Host capability into products that previously did not have the hardware resources available. The VNC1L-1A is available in Pb-free (RoHS compliant) compact 48-Lead LQFP package.

1.2 Features

- Two USB 'A' sockets connect to digital camera and USB flash disk respectively.
- Uses F.T.D.I.'s VNC1L embedded USB host controller I.C. device.
- Single button file backup function.
- Intelligent LED illustrate successful USB Flash disk enumeration, file copy function, and error conditions.
- On-board DC-DC converter supplies the circuitry with 5V and 3.3V power from 2 x AAA cells.
- Program or update firmware via USB Flash disk or UART interface.
- VNC1L firmware programming control pins (RESET# and PROG#) brought out onto jumper interface
- Schematics, firmware, and PCB gerber files available for download from the Vinculum website.
- Assembled VF2F2 PCB available for evaluation.
- Assembled VF2F2 evaluation kit is Pb-free and RoHS compliant.

© Future Technology Devices International Ltd. 2007

2. Function and Operation

2.1 Button Functions

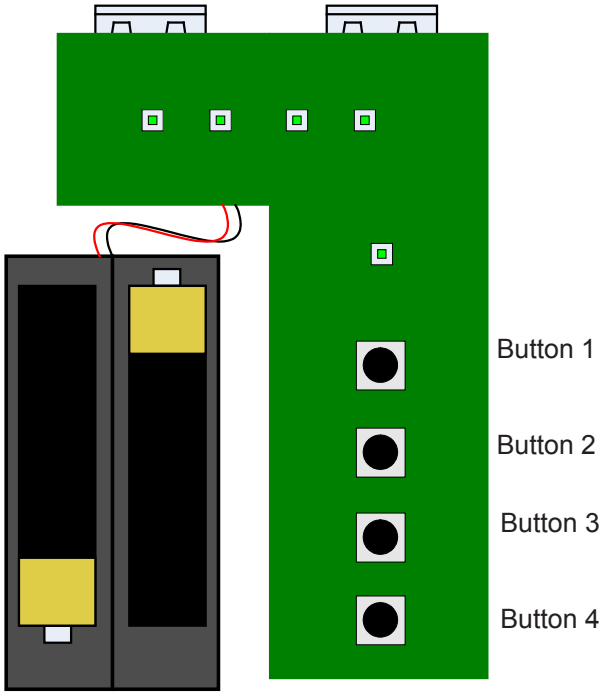

Button 1 - Power on. Press and hold for 200 ms to switch on the VF2F2. The Yellow LED indicates that the board is powered. The board will auto-power off after 30 seconds in order to conserve battery power.

Button 2 - Currently has no function defined in the VDFC firmware.

Button 3 - Initiates data transfer from the source device on USB Port 1 to the target device on USB Port 2. The four green LED's will display a cascade effect from USB Port 1 to USB Port 2 during data transfer

Button 4 - Power off. Press and hold for at least 200 ms to power down the VF2F2.

Figure 1 - VF2F Button interface

2.2 USB Interface Ports

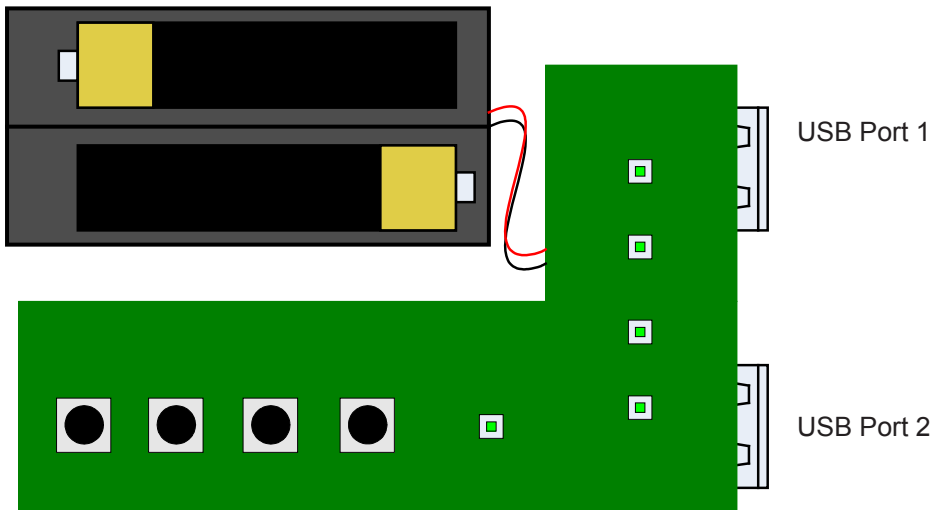

Figure 2 - VF2F2 USB Port Interface

USB Port 1 is the USB source device port. Connect the digital camera (or other USB mass storage class device here).

USB Port 2 is the USB target device port. Connect a USB flash disk here.

The two red / green LED's will indicate the status of the USB device connected. These two LED's will be off when no device is connected, red while enumerating a device, and green when a device is enumerated and ready for file transfer to begin.

© Future Technology Devices International Ltd. 2007

2.3 Programming Header Interface

The VNC1L's UART and programming control pins (RESET# and PROG#) are brought out onto the interface marked J3 on the underside of the VF2F2's upper PCB. It can be used for programming the VNC1L via a F.T.D.I. TTL-232R-3V3 USB to TTL serial cable. While a FTDI TTL-232R-3V3 cable is connected the VF2F2 will take its power from here, rather than the two AAA batteries. Application software (VPROG) for programming the VNC1L from a PC via a TTL-232R-3V3 cable is available from the Vinculum website.

Table 1 - J3 Pin Header UART Programming Interface

Pin No.	Name	Type	Description
1	RESET#	Input	This pin is used in combination with the RESET# pin and the UART interface to program firmware into the VNC1L.
2	PROG#	Input	This pin can be used in combination with PROG# and the UART interface to program firmware into the VNC1L.
3	GND	PWR	Signal ground
4	RTS#	Output	Request To Send Control Output / Handshake signal
5	TTLPWR	PWR	3.3V power input
6	RXD	Input	Receive asynchronous data input
7	TXD	Output	Transmit asynchronous data output
8	CTS#	Input	Clear To Send Control Input / Handshake signal

© Future Technology Devices International Ltd. 2007

3. Firmware

3.1 File to File Transfer with GPIO (Button) Interface (VDFC)

The VF2F2 reference design uses the VDFC Vinculum VNC1L device firmware. It allows for files to be easily transferred from a digital camera (or other mass storage class device) to a USB Flash disk. USB Port 1 is defined in this firmware as the source device, and USB Port 2 is defined as the target device. Several of the VNC1L's GPIO lines are used to provide a simple push button user interface which is effectively acting as the VNC1L's command monitor port in this case.

The VF2F2 firmware can be loaded and / or upgraded either from a file, with an appropriate name on a USB Flash disk, or via the VNC1L's UART interface.

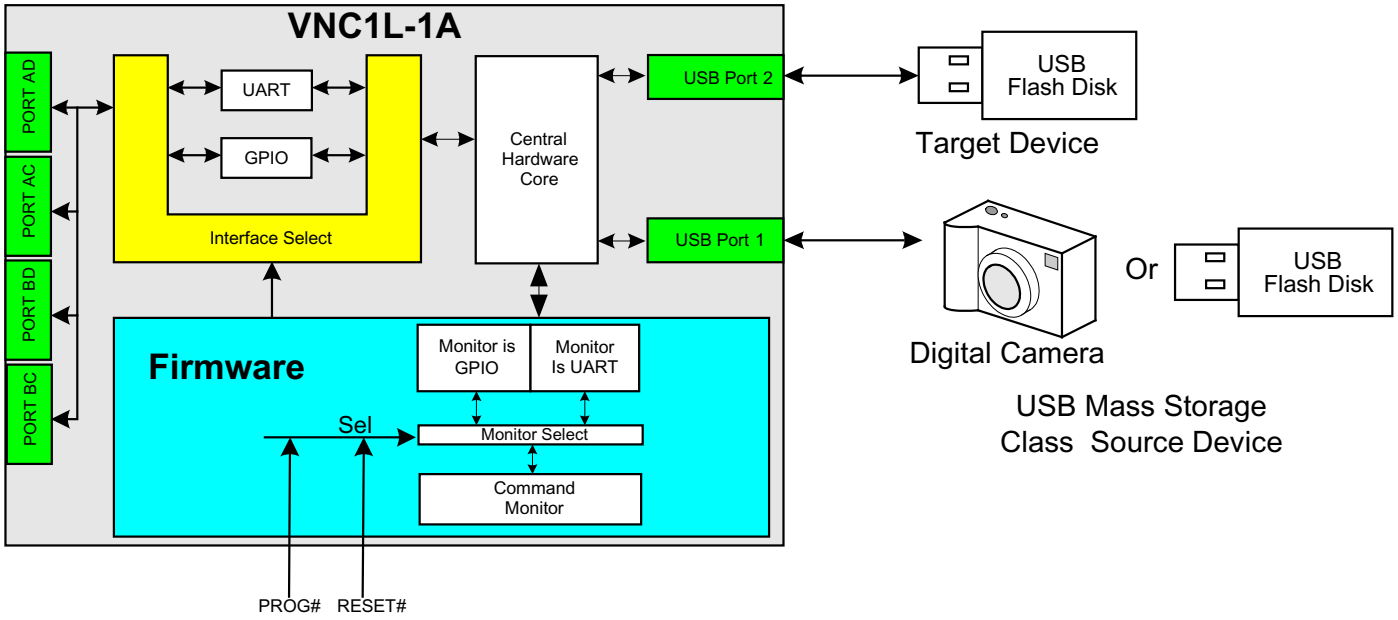

Figure 3 - VDFC Firmware model

© Future Technology Devices International Ltd. 2007

4. Dimensions

4.1 VF2F2 Board Dimensions

The VF2F2 board dimensions are shown below.

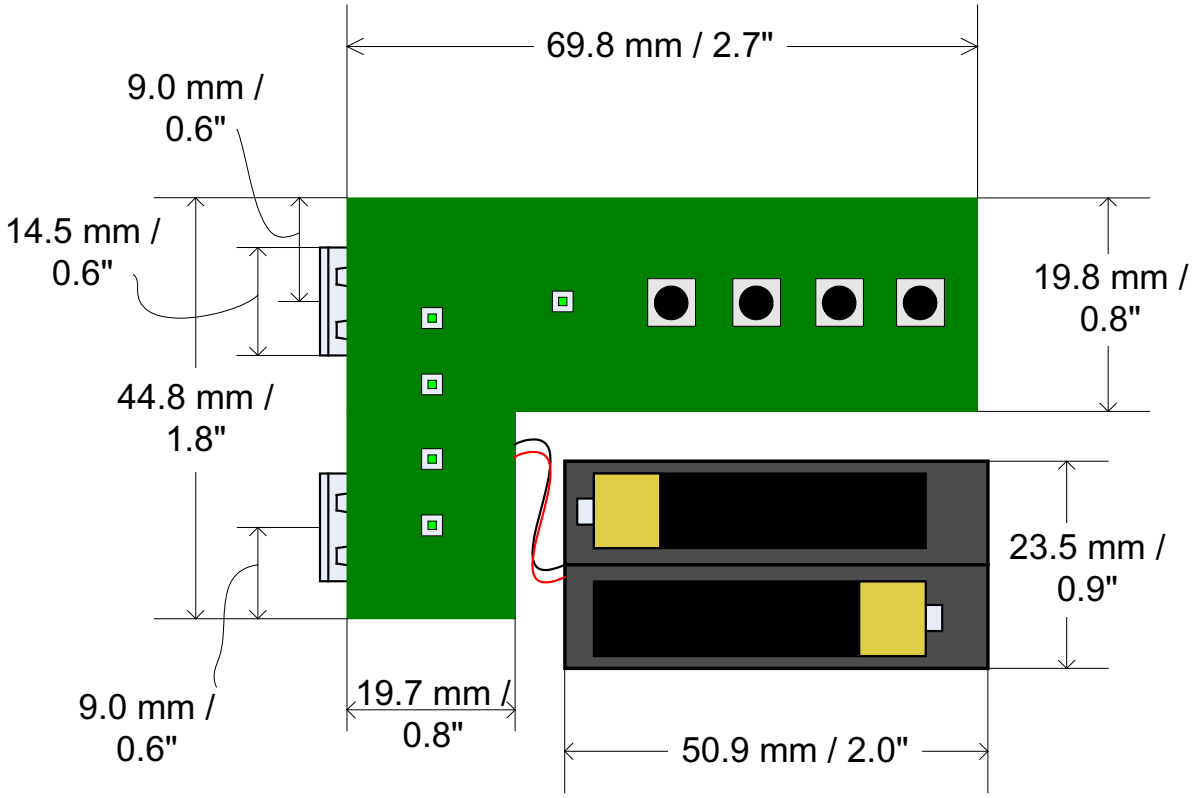

Figure 4 - VF2F2, top view.

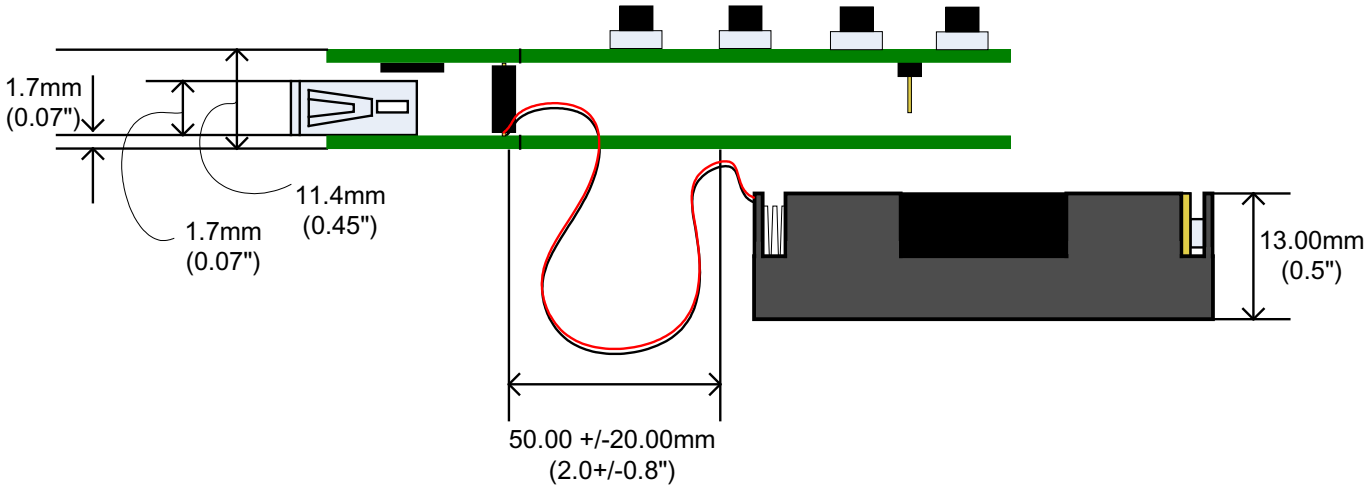

Figure 5 - VF2F2, side view.

© Future Technology Devices International Ltd. 2007

Disclaimer

Copyright © Future Technology Devices International Limited , 2007.

Version 0.90 - Initial Datasheet Created March 2007

Neither the whole nor any part of the information contained in, or the product described in this manual, may be adapted or reproduced in any material or electronic form without the prior written consent of the copyright holder.

This product and its documentation are supplied on an as-is basis and no warranty as to their suitability for any particular purpose is either made or implied.

Future Technology Devices International Ltd. will not accept any claim for damages howsoever arising as a result of use or failure of this product. Your statutory rights are not affected.

This product or any variant of it is not intended for use in any medical appliance, device or system in which the failure of the product might reasonably be expected to result in personal injury.

This document provides preliminary information that may be subject to change without notice.

Contact FTDI

Head Office -
Future Technology Devices International Ltd.
373 Scotland Street,
Glasgow G5 8QB,
United Kingdom

Tel. : +(44) 141 429 2777
Fax. : +(44) 141 429 2758

E-Mail (Sales) : **sales1@ftdichip.com**
E-Mail (Support) : **support1@ftdichip.com**
E-Mail (General Enquiries) : **admin1@ftdichip.com**

Regional Sales Offices -

Future Technology Devices International Ltd. (Taiwan)
4F, No 18-3,
Sec. 6 Mincyuan East Road,
Neihu District,
Taipei 114,
Taiwan, R.o.C.

Tel.: +886 2 8791 3570
Fax: +886 2 8791 3576

E-Mail (Sales): **tw.sales@ftdichip.com**
E-Mail (Support): **tw.support@ftdichip.com**
E-Mail (General Enquiries): **tw.admin@ftdichip.com**

Future Technology Devices International Ltd. (USA)
7235 NW Evergreen Parkway,
Suite 600
Hillsboro,
OR 97124-5803
USA

Tel.: +1 (503) 547-0988
Fax: +1 (503) 547-0987

E-Mail (Sales): **us.sales@ftdichip.com**
E-Mail (Support): **us.support@ftdichip.com**
E-Mail (General Enquiries): **us.admin@ftdichip.com**

Website URL : **http://www.ftdichip.com**

© Future Technology Devices International Ltd. 2007