

VINCULUM

BINDING USB TECHNOLOGIES

Future Technology Devices International Ltd.

VNC2 Debug Module

Datasheet

Document Reference No.: FT_000254

Version 1.1

Issue Date: 2010-05-03

Future Technology Devices International Ltd (FTDI)

Unit 1, 2 Seaward Place, Centurion Business Park, Glasgow, G41 1HH, United Kingdom

Tel.: +44 (0) 141 429 2777 Fax: + 44 (0) 141 429 2758

E-Mail (Support): support1@ftdichip.com

Web: http://www.vinculum.com

Neither the whole nor any part of the information contained in, or the product described in this manual, may be adapted or reproduced in any material or electronic form without the prior written consent of the copyright holder. This product and its documentation are supplied on an as-is basis and no warranty as to their suitability for any particular purpose is either made or implied. Future Technology Devices International Ltd will not accept any claim for damages howsoever arising as a result of use or failure of this product. Your statutory rights are not affected. This product or any variant of it is not intended for use in any medical appliance, device or system in which the failure of the product might reasonably be expected to result in personal injury. This document provides preliminary information that may be subject to change without notice. No freedom to use patents or other intellectual property rights is implied by the publication of this document. Future Technology Devices International Ltd, Unit 1, 2 Seaward Place, Centurion Business Park, Glasgow, G41 1HH, United Kingdom. Scotland Registered Number: SC136640

Copyright © 2010 Future Technology Devices International Limited

1 Introduction

The following data sheet details the features and specifications of the VNC2 debug module. The VNC2 debug module is designed to provide connectivity between the Vinculum-II IDE development software and the debug interface pin on the FTDI Vinculum-II (VNC2) USB host controller device.

The VNC2 debug module consists of a miniature board with a USB miniB connector, which provides USB connectivity to Vinculum-II IDE development tools running on a PC. The VNC2 debug module can be used to program and debug firmware running on the VNC2 device.

The module connects to the VNC2 device via a 6-way, 2mm pitch, keyed, female connector. The V2DIPx-x, VNC2 based development modules are equipped with a compatible male connector to host the VNC2 debug module. Designers intending to use the module with their own VNC2 based hardware are required to have a similar compatible male connector on their hardware. Details on the debug interface and connectors are outlined in subsequent sections of this document.

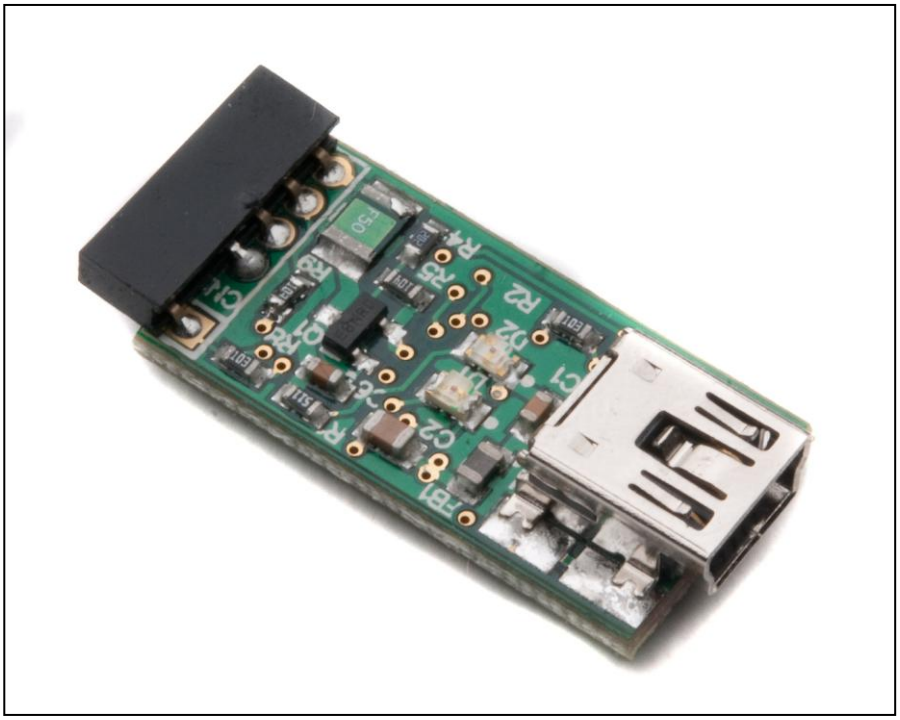

Figure 1.1 VNC2 Debugger Module

Copyright © 2010 Future Technology Devices International Limited

Table of Contents

1 Introduction 1
2 Applications 3
2.1 Features 3
2.2 Software Drivers 3
2.3 Part Number 3
2.4 References 4
2.5 Acronyms and Abbreviations 4
3 Functional Description 5
3.1 Module Layout 5
3.2 Components 6
3.3 Debug Interface Description (CN2) 6
3.4 Connecting Debug Module on V2DIPx-x Modules 7
3.5 Connecting Debug Module on Custom PCB 7
3.6 Confirm Debug Connection Using IDE 8
4 Electrical Specifications 9
4.1 +5V Supply Ratings 9
5 Mechanical Dimensions 10
5.1 Debug Module PCB Mechanical details 10
5.2 Debug Connector Mechanical Details 11
6 Debug Module Schematic Diagram 12
7 Contact Information 13
Appendix A – List of Figures and Tables 14
List of Figures 14
List of Tables 14
Appendix B – Revision History 15

Copyright © 2010 Future Technology Devices International Limited

2 Applications

- Enable firmware programming of VNC2 devices on V2DIPx-x development modules and custom VNC2 based hardware.
- Debug firmware code running on a VNC2 device.

2.1 Features

The VNC2 debug module incorporates the following features:

- One USB 'miniB' type socket to connect with a PC.
- Onboard FTDI FT232R which provides conversion from USB to serial interface for VNC2 debug port.
- Low USB bandwidth consumption.
- USB2.0 Full Speed compatible.
- UHCI/OHCI/EHCI host controller compatible.
- 5V Power output to V2DIP-x module (if needed).
- USB powered.
- Programming and debugging for VNC2 IC designs.
- Power and traffic indicator LEDs
- 6 way, keyed connector to support FTDI's range of V2DIPx-x development modules.
- VNC2 debug module is a Pb-free, RoHS complaint development module.
- -40℃ to +85℃ operating temperature range.

2.2 Software Drivers

USB drivers for the FT232R device, featured on the VNC2 debug module, are available from http://www.ftdichip.com.

2.3 Part Number

The part number for the board is- **VNC2 DEBUG MODULE**

Copyright © 2010 Future Technology Devices International Limited

2.4 References

The following reference documents are recommended to provide additional information on the application and function of the VNC2 debug module.

Document Name	Description
1. FT_000138	Vinculum-II Embedded Dual USB Host Controller IC Data Sheet.
2. FT_000053	FT232R Data Sheet.
3. FT_000163	V2DIP1-32 Data Sheet.
4. FT_000164	V2DIP2-32 Data Sheet.
5. FT_000165	V2DIP1-64 Data Sheet.
6. FT_000166	V2DIP2-64 Data Sheet.
7. FT_000236	V2DIP1-48 Data Sheet.
8. FT_000237	V2DIP2-48 Data Sheet.
9. AN_138	Vinculum-II Debug Interface Description.
10. AN_137	Vinculum-II IO Cell Description.
11. AN_139	Vinculum-II IO Mux Explained.
12. AN_140	Vinculum-II PWM Example.

Table 2.1 References

2.5 Acronyms and Abbreviations

Terms	Description
USB	Universal Serial Bus
VNC2	Vinculum-II
IDE	Integrated Development Environment
V2DIPx-x	Collective term used to refer to following VNC2 based development modules - V2DIP1-32, V2DIP2-32, V2DIP1-48, V2DIP2-48, V2DIP1-64, and V2DIP2-64

Table 2.2 Abbreviations

Copyright © 2010 Future Technology Devices International Limited

3 Functional Description

3.1 Module Layout

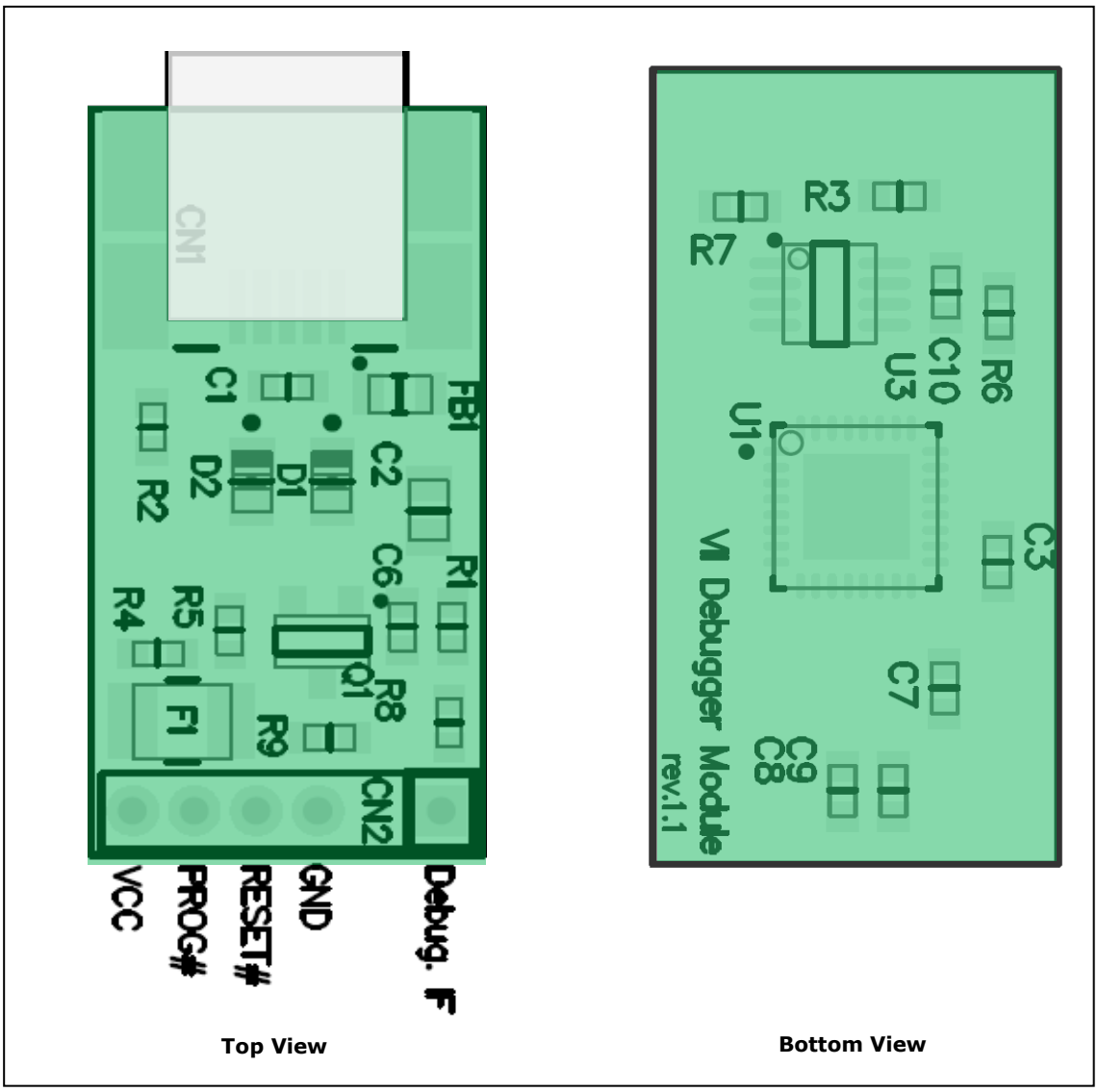

Figure 3.1 VNC2 Debug Module Layout.

Copyright © 2010 Future Technology Devices International Limited

3.2 Components

Name	Board Designator	Description
Debug Connector	CN2	Debug connector, 6-way 2mm pitch female connector.
USB Connector	CN1	USB Mini-B type connector for connecting to PC.
FT232R	U1	FTDI FT232R USB to serial converter device.
2 Port Buffer	U3	2 port buffer device used to convert VNC2 debug signal from single bit bidirectional signal into separate transmit and receive signals for FT232R. Data flow direction control on the buffer is carried out by the TXEN output from the FT232R. TXEN at logic '1' will indicate transmit.
Transmit / Receive LED (red)	D1	LED indicating transmit or receive traffic.
Power LED (yellow)	D2	LED indicating power status.
FET switch	Q1	FET switch used to switch power on or off on connector CN2. FET switch is controlled by PWREN# output from FT232R.

Table 3.1 Component Descriptions

3.3 Debug Interface Description (CN2)

Pin No.	Name	Type	Description
1	Debug. IF	I/O	Debugger Interface.
2	[Key]	-	Not connected.
3	GND	PWR	Module ground supply pin.
4	RESET#	Output	Connects to VNC2 RESET# pin. This pin may be used in combination with PROG# and the UART interface to program firmware into the VNC2 device.
5	PROG#	Output	Connects to VNC2 PROG# pin. This pin is used in combination with the RESET# pin and the UART interface to program firmware into the VNC2 device.
6	VCC	5V Output	5V output to V2DIP module (from USB bus power).

Table 3.2 Signal Descriptions

Note: Signal levels on pins 1, 4 and 5 have 3.3V signalling levels to match the VNC2 interface.

Copyright © 2010 Future Technology Devices International Limited

3.4 Connecting Debug Module on V2DIPx-x Modules

The V2DIPx-x modules have a compatible 6-pin, 2mm pitch male connector for directly connecting the VNC2 debug module to the V2DIPx-x board.

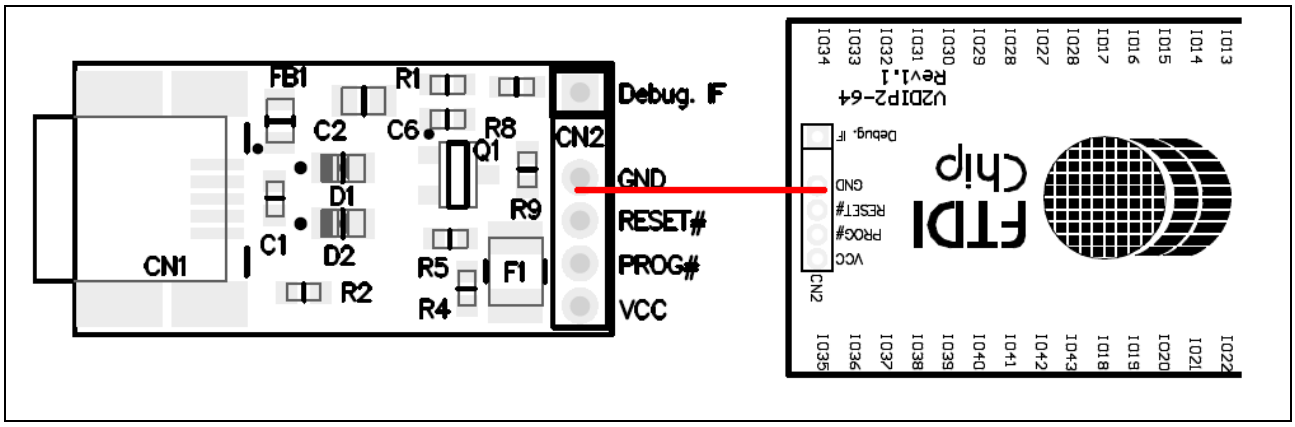

Figure 3.2 Example Connection of Debug Module Connection to V2DIP2-64

3.5 Connecting Debug Module on Custom PCB

Where a customer is developing their own VNC2 based hardware, customers can support the VNC2 debug module connectivity by hosting a compatible connector on their PCB. The VNC2 debug module requires a 6-pin, 2mm pitch male connector providing connectivity to the VNC2 debug pin, PROG# and RESET# pins, as well as GND and VCC pins. Details on the required connectivity are shown on

Figure 3.3.

A Samtec connector, part number TMM-106-01-G-S-RA, has been used as the mating male connector for the debug module on the V2DIPx-x modules. Similiar connectors are available from other vendors.

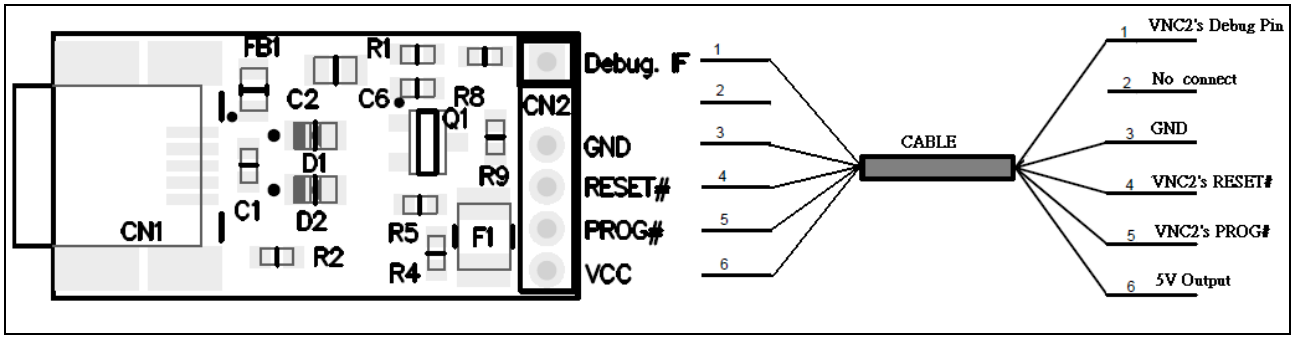

Figure 3.3 VNC2 Debug Module Interfaced To VNC2 Custom Application

Notes:

Debug pin: By default the VNC2 debug pin is mapped to IOBUS0 pin on the VNC2. However the debug pin can be relocated to altering the IOMUX multiplexer settings for the device in a user application. Designers are advised to check the configuration of the debug pin prior to connecting the VNC2 debug pin to their board.

VCC +5V Supply: Optional requirement for the debug interface. +5V supplied from the USB interface via connector CN1. Can be used to supply up to 400mA to an external circuit on the mating board.

Copyright © 2010 Future Technology Devices International Limited

3.6 Confirm Debug Connection Using IDE

Having connected the VNC2 debug module to the VNC2 hardware, a user can verify the operation of the debug interface operation using the Vinculum II IDE development software.

Simply connect the debug module to a PC via the mini-B USB connector. Open the Vinculum II IDE software. Under the 'Debug' tab the 'VII Debugger Module' should be listed as an available debug interface. Once detected, users can now use the VNC2 debug module to debug code and program the VNC2 device.

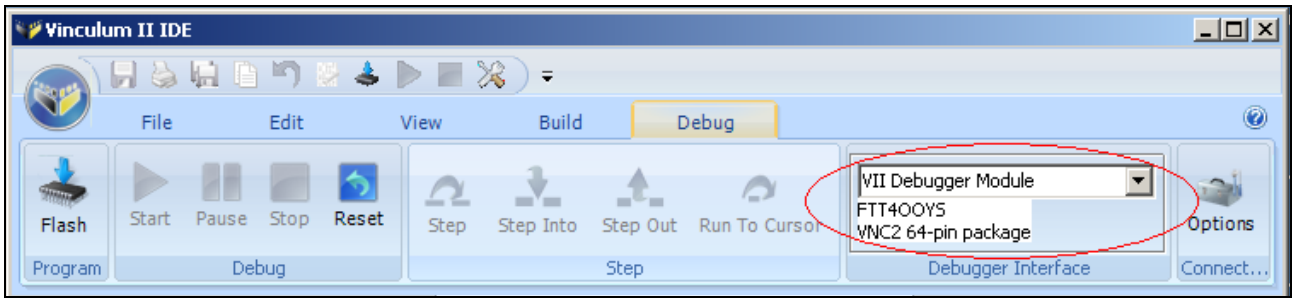

Figure 3.4 VNC2 Connection Confirmation on Vinculum-II IDE

Copyright © 2010 Future Technology Devices International Limited

4 Electrical Specifications

4.1 +5V Supply Ratings

Parameter	Description	Minimum	Typical	Maximum	Units	Conditions
VCC	Output Power Voltage	4.25	5.0	5.25	V	Dependent upon USB port connected to the VNC2 Debug Module.
I_0	Output Power Current	-	-	400	mA	Current supply controlled by a switch on the debug module, where the VCC supply is switched off when the device is placed in USB suspend mode.
T	Operating Temperature Range	-40		+85	^{0}C	

Table 4.1 Electrical Specifications for +5V supply

Copyright © 2010 Future Technology Devices International Limited

5 Mechanical Dimensions

5.1 Debug Module PCB Mechanical details

Dimensions in mm.Tolerance is ±0.1mm

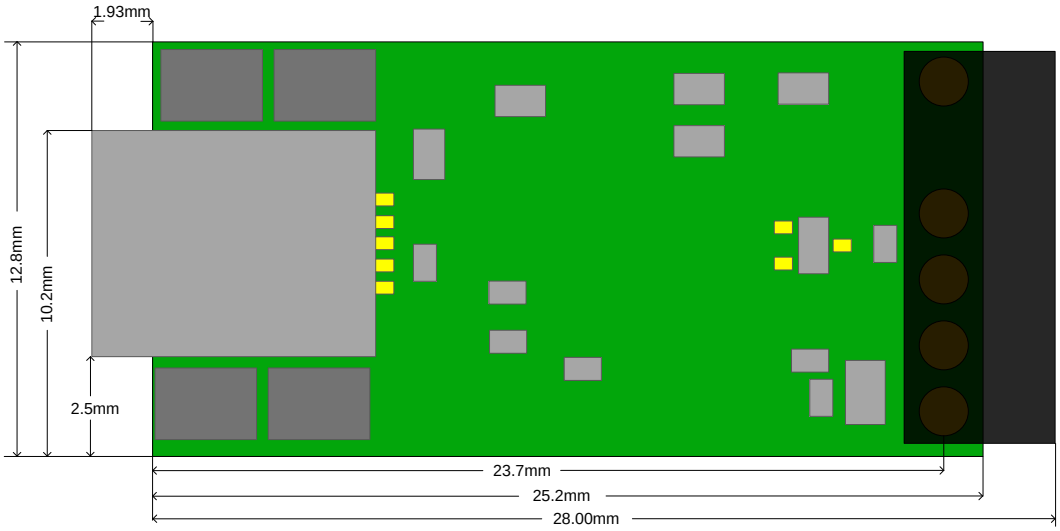

Figure 5.1 VNC2 Debug Module Dimensions (Top View)

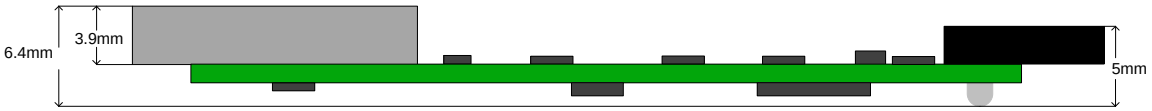

Figure 5.2 VNC2 Debug Module Dimensions (Side View)

Copyright © 2010 Future Technology Devices International Limited

5.2 Debug Connector Mechanical Details

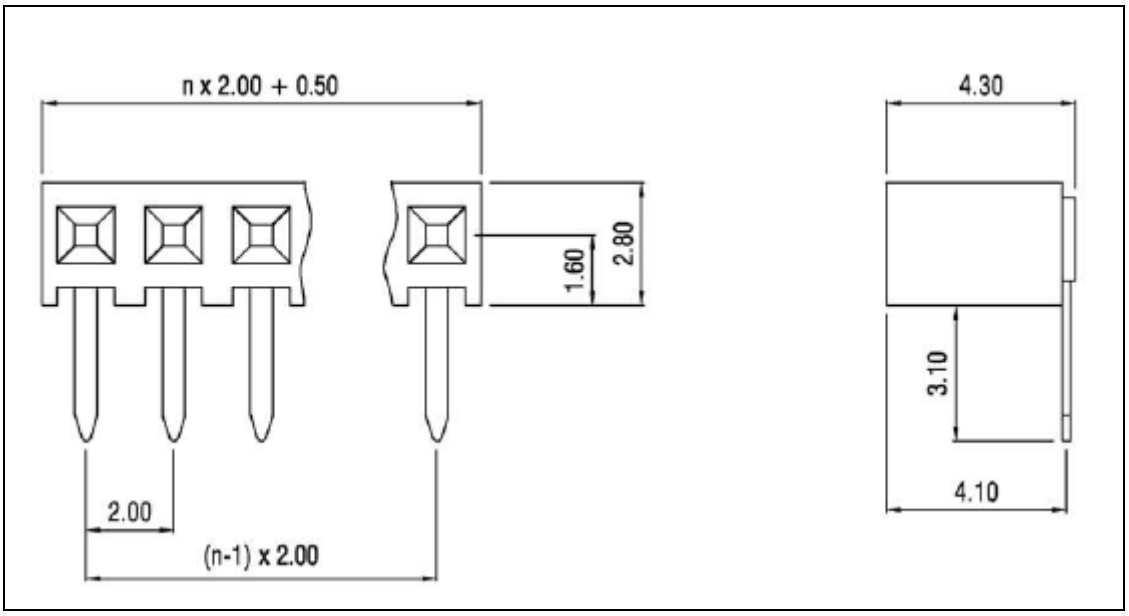

Figure 5.3 VNC2 Debug Module 6 way Female Header - Mechanical Details (n=6)

Dimensions in mm. Tolerance is ±0.1mm

Copyright © 2010 Future Technology Devices International Limited

6 Debug Module Schematic Diagram

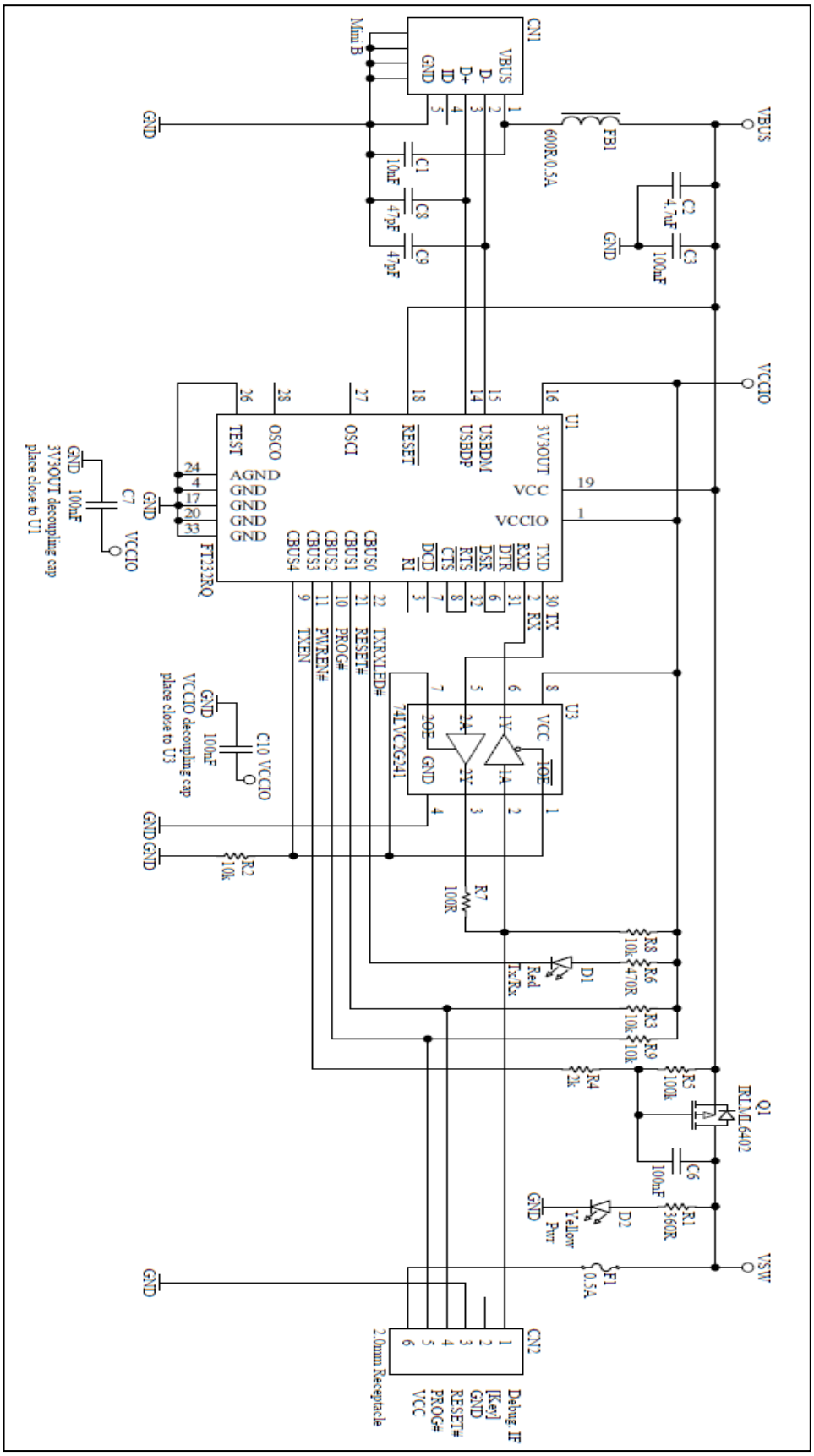

Figure 6.1 Debug Module Schematic Diagram

Copyright © 2010 Future Technology Devices International Limited

7 Contact Information

Head Office – Glasgow, UK

Future Technology Devices International Limited
Unit 1, 2 Seaward Place,
Centurion Business Park
Glasgow, G41 1HH
United Kingdom
Tel: +44 (0) 141 429 2777
Fax: +44 (0) 141 429 2758

E-mail (Sales) sales1@ftdichip.com
E-mail (Support) support1@ftdichip.com
E-mail (General Enquiries) admin1@ftdichip.com
Web Site URL http://www.ftdichip.com
Web Shop URL http://www.ftdichip.com

Branch Office – Taipei, Taiwan

Future Technology Devices International Limited (Taiwan)
2F, No 516, Sec. 1 NeiHu Road
Taipei 114
Taiwan, R.O.C.
Tel: +886 (0) 2 8791 3570
Fax: +886 (0) 2 8791 3576

E-mail (Sales) tw.sales1@ftdichip.com
E-mail (Support) tw.support1@ftdichip.com
E-mail (General Enquiries) tw.admin1@ftdichip.com
Web Site URL http://www.ftdichip.com

Branch Office – Hillsboro, Oregon, USA

Future Technology Devices International Limited (USA)
7235 NW Evergreen Parkway, Suite 600
Hillsboro, OR 97123-5803
USA
Tel: +1 (503) 547 0988
Fax: +1 (503) 547 0987

E-Mail (Sales) us.sales@ftdichip.com
E-Mail (Support) us.support@ftdichip.com
Web Site URL http://www.ftdichip.com

Branch Office – Shanghai, China

Future Technology Devices International Limited (China)
Room 408, 317 Xianxia Road,
ChangNing District,
ShangHai, China

Tel: +86 (21) 62351596
Fax: +86(21) 62351595

E-Mail (Sales): cn.sales@ftdichip.com
E-Mail (Support): cn.support@ftdichip.com
E-Mail (General Enquiries): cn.admin1@ftdichip.com
Web Site URL http://www.ftdichip.com

Distributor and Sales Representatives

Please visit the Sales Network page of the FTDI Web site for the contact details of our distributor(s) and sales representative(s) in your country.

Copyright © 2010 Future Technology Devices International Limited

Appendix A – List of Figures and Tables

List of Figures

Figure 1.1 VNC2 Debugger Module 1
Figure 3.1 VNC2 Debug Module Layout. 5
Figure 3.2 Example Connection of Debug Module Connection to V2DIP2-64 7
Figure 3.3 VNC2 Debug Module Interfaced To VNC2 Custom Application 7
Figure 3.4 VNC2 Connection Confirmation on Vinculum-II IDE 8
Figure 5.1 VNC2 Debug Module Dimensions (Top View) 10
Figure 5.2 VNC2 Debug Module Dimensions (Side View) 10
Figure 5.3 VNC2 Debug Module 6 way Female Header - Mechanical Details (n=6) 11
Figure 6.1 Debug Module Schematic Diagram 12

List of Tables

Table 2.1 References 4
Table 2.2 Abbreviations 4
Table 3.1 Component Descriptions 6
Table 3.2 Signal Descriptions 6
Table 4.1 Electrical Specifications for +5V supply 9

Copyright © 2010 Future Technology Devices International Limited

Appendix B – Revision History

Version 1		15th April 2010
Version 1.1	Updated image	3rd May 2010

Copyright © 2010 Future Technology Devices International Limited