Accessories and Tools

600-192 Spanner Nut and 600-202 Spanner Tool

600-192 SPANNER NUT TIGHTENING TOOL

Spanner nut tool fits front panel mount or rear panel mount jam nuts. Heat-treated steel, nickel plated.



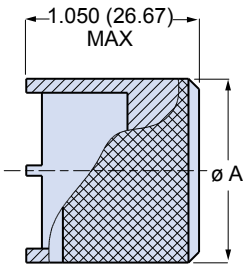

Shell Size	Spanner Tool Part Number	Ø A		Drive Square	Recommended Torque (In-Lbs.)	
		In.	mm.		Min	Max
B	600-192-B	.412	10.46	3/16"	8	13
C	600-192-C	.432	10.97	3/16"	13	18
D	600-192-D	.451	11.46	1/4"	13	18
E	600-192-E	.471	11.96	1/4"	13	18
F	600-192-F	.491	12.47	1/4"	16	21
G	600-192-G	.510	12.95	1/4"	16	21
H	600-192-H	.549	13.94	1/4"	20	25
J	600-192-J	.589	14.96	1/4"	20	25
K	600-192-K	.608	15.44	1/4"	20	25
L	600-192-L	.648	16.46	3/8"	23	28

600-202 SPANNER TOOL FOR FRONT PANEL MOUNT JAMNUT



Tool Size	Spanner Tool Part Number	Dimensions					Recommended Torque Value in Lbs	
		Ø A		Ø B		Jam Nut Thd Size Reference		
		In.	mm.	In.	mm.		Min	Max
B	600-202-B	0.572	14.53	0.332	8.43	M7.0	8	13
C	600-202-C	0.590	14.99	0.350	8.89	M7.5	13	18
D	600-202-D	0.610	15.49	0.370	9.40	M8.0	13	18
E	600-202-E	0.629	15.98	0.389	9.88	M8.5	13	18
F	600-202-F	0.647	16.43	0.407	10.34	M9.0	16	21
G	600-202-G	0.667	16.94	0.427	10.85	M9.5	16	21
H	600-202-H	0.705	17.91	0.465	11.81	M10.5	20	25
J	600-202-J	0.745	18.92	0.505	12.83	M11.5	20	25
K	600-202-K	0.763	19.38	0.523	13.28	M12.0	20	25
L	600-202-L	0.803	20.40	0.563	14.30	M13.0	23	28

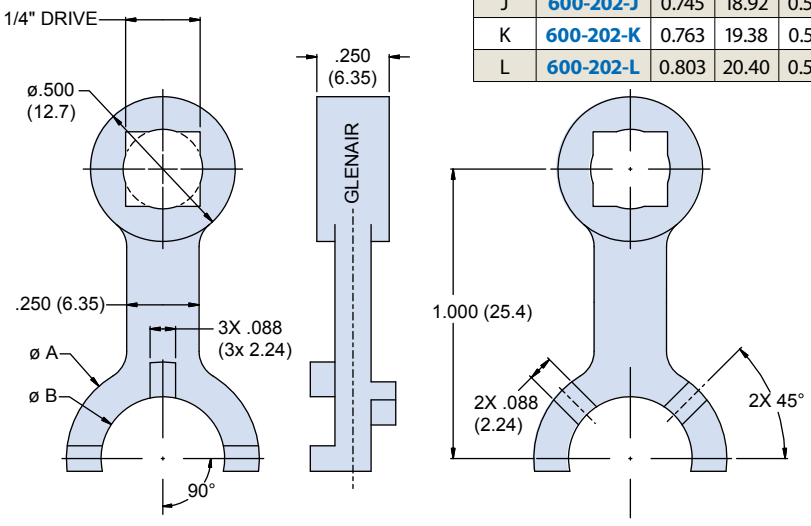

Spanner nut tool fits front panel mount jam nuts. Alloy steel, nickel plated.

E

© 2015 Glenair, Inc • 1211 Air Way, Glendale, CA 91201 • 818-247-6000 • www.glenair.com • U.S. CAGE code 06324 • Series 88 SuperFly® Catalog
Dimensions in Inches (millimeters) are subject to change without notice.