IT 3057-XXA
Cable Clamp, General Duty
for Jacketed or Multipolar Cable or Wires Protected by Tubing

Basic Part Number and Shell Size Designator (Table I)		Finish Options (Table II)
IT	3057-20A	XX

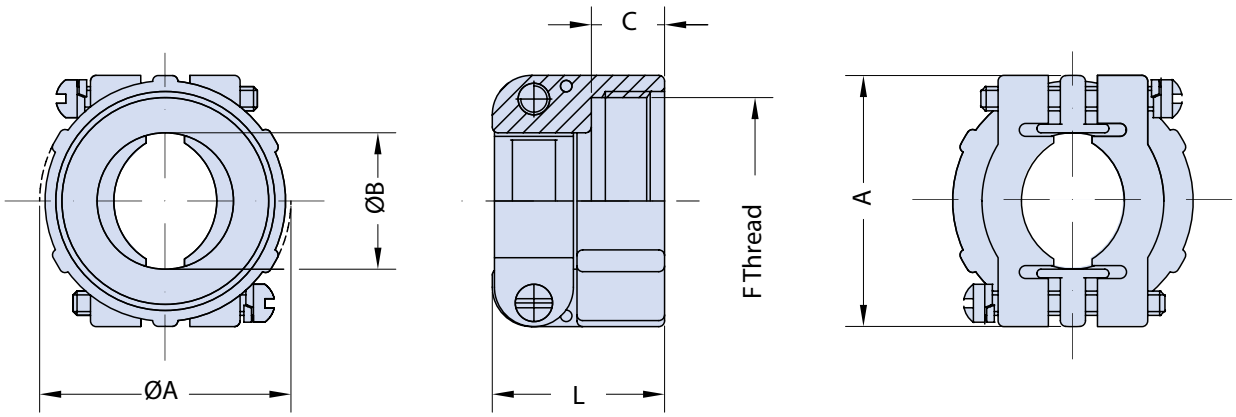

Application Notes

1. General duty cable clamp suitable for jacketed or multipolar cable or wires protected by tubing.
2. Standard materials configuration consists of aluminum alloy. For platings, see TABLE II finish options.

© 2015 Glenair, Inc.

IT 3057-XXA
Cable Clamp, General Duty
for Jacketed or Multipolar Cable or Wires Protected by Tubing

TABLE I: CABLE CLAMP PART NUMBERS, SHELL SIZE, SLEEVING, DIMENSIONS & THREAD

Part Number	Shell Size	Sleeve to Use	ØA	ØB	C	F Thread	L Max.
IT 3057- 4A	**10 SL**	**IT 3420- 4**	25	8.2	10.2	0.6250 - 24UNEF	21.0
IT 3057- 6A	**14 S**	**IT 3420- 6**	27	11.2	10.2	0.7500 - 20UNEF	22.2
IT 3057- 8A	**16 S - 16**	**IT 3420- 8**	28	14.2	10.2	0.8750 - 20UNEF	24.0
IT 3057-10A	**18**	**IT 3420-10**	33	16.0	10.2	1.0000 - 20UNEF	28.5
IT 3057-12A	**20 - 22**	**IT 3420-12**	35	19.0	10.2	1.1875 - 18UNEF	24.0
IT 3057-16A	**24 - 28**	**IT 3420-16**	43	23.8	10.5	1.4375 - 18UNEF	26.0
IT 3057-20A	**32**	**IT 3420-20**	51	31.7	12.5	1.7500 - 18UNS	28.0
IT 3057-24A	**36**	**IT 3420-24**	58	35.0	14.0	2.0000 - 18UNS	29.4
IT 3057-28A	**40**	**IT 3420-28**	65	41.2	14.0	2.2500 - 16UN	42.8

TABLE II

STANDARD MATERIAL AND FINISH (*)		
Sym	**Description**	**RoHS**
	Omit for Aluminum/ Cadmium Olive Drab	
F6	Aluminum/ Black Electrodeposited Paint	✓
F7	Aluminum/ Black Zinc Nickel	✓
F11	Aluminum/ Electroless Nickel	✓

(*) For further options, please contact the factory.

© 2015 Glenair, Inc.