SMRF2007

SMRF2007LF*

RoHS COMPLIANT

Molded Unshielded Vertical Toroidal Inductor

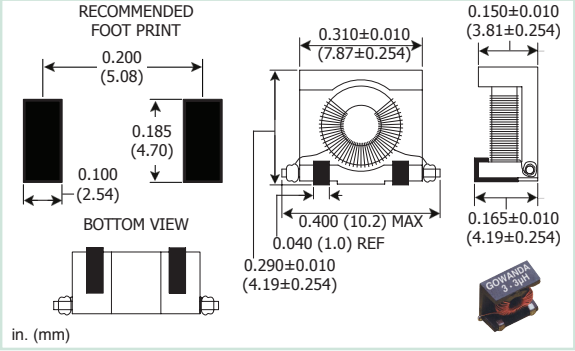

PART NUMBER	L µH	TEST FREQ MHz	SRF MIN MHz	DCR Ω MAX	I SAT mA DC	CURRENT RATING mA DC
SMRF2007-100M	0.10	10	1292	0.019	4500	3100
SMRF2007-220M	0.22	10	624	0.029	3000	2510
SMRF2007-470M	0.47	10	321	0.040	2000	2130
SMRF2007-680M	0.68	10	214	0.059	1600	1760
SMRF2007-101M	1.0	10	180	0.062	1400	1710
SMRF2007-151M	1.5	10	125	0.072	1200	1590
SMRF2007-181M	1.8	10	114	0.077	1000	1540
SMRF2007-271M	2.7	1	86	0.088	900	1440
SMRF2007-331M	3.3	1	82	0.096	800	1380
SMRF2007-391M	3.9	1	78	0.100	700	1350
SMRF2007-561M	5.6	1	64	0.120	600	1230
SMRF2007-681M	6.8	1	58	0.170	540	1040
SMRF2007-821M	8.2	1	51	0.240	490	871
SMRF2007-102M	10	1	51	0.260	440	873
SMRF2007-122M	12	1	45	0.360	400	711
SMRF2007-152M	15	1	45	0.520	340	592
SMRF2007-182M	18	1	34	0.640	310	533
SMRF2007-222M	22	1	25	0.220	98	909
SMRF2007-272M	27	1	25	0.250	88	853
SMRF2007-332M	33	1	25	0.330	78	743
SMRF2007-392M	39	1	24	0.470	72	622
SMRF2007-472M	47	1	20	0.550	60	575

NOTES:

- **Operating Temperature Range**: -55°C to +125°C
- **Current Rating** is based on a 35°C temperature rise at an ambient temperature of 90°C
- **Saturation Current** is the approximate value that will reduce the initial inductance by 10%
- **Weight Max**: 0.35 grams
- **Marking**: GOWANDA; L µH
  GOWANDA
  0.10 µH
- Molded base for superior heat strength
- When ordering, specify **tolerance** & **termination**:
  SMRF2007-100MLF
  Tolerance: **M** = 20%
  (Table shows lowest standard tolerance option)
  **Optional tolerances are available; contact factory*
  Termination: **LF** = RoHS compliant tin-silver copper over copper
- Custom designs are available to meet your specific requirements; please contact factory

TAPE AND REEL SPECS:

Pcs./Reel maximum:	700
Pitch between parts:	12 mm
Tape width:	24 mm
Reel diameter:	13 in.

One Magnetics Pkwy, Gowanda, NY 14070
(t) 716-532-2234 • (f) 716-532-2702 • sales@gowanda.com
www.gowanda.com

REV: ISSUE
06182019

SMRF2007
SMRF2007LF*

Molded Unshielded Vertical Toroidal Inductor

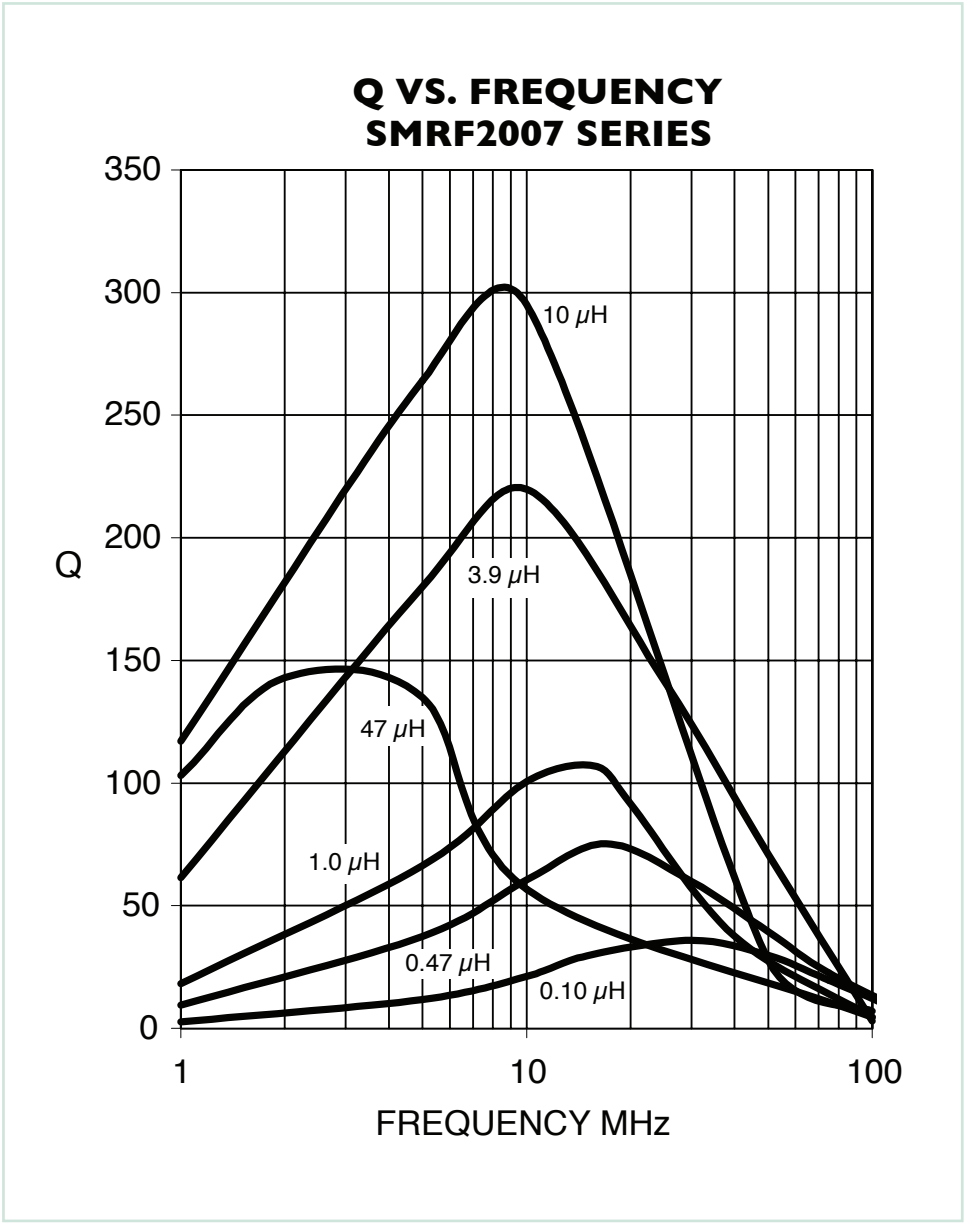

One Magnetics Pkwy, Gowanda, NY 14070
(t) 716-532-2234 • (f) 716-532-2702 • sales@gowanda.com
www.gowanda.com

REV: ISSUE
06182019