Specifications are subject to change. Please refer to the current datasheet on www.grayhill.com for the most current published specifications for this product.

SERIES 29



FEATURES

- Flush Hole to Prevent Crimping
- Space-Saving 3/8" Diameter or Decorative Flared Skirt
- Dual Mounting Base Accessory

DIMENSIONS In Inches (and millimeters)

Straight Skirt Style
29-1 BLK and 29-1 RED
Screw post fits 3/8" (9,53) diameter hole for close spacing.

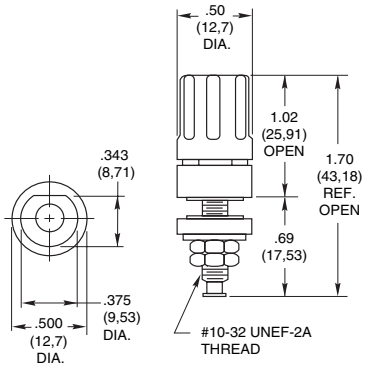

Dual Mounting Base
29B11-1
For use with 29-1 BLK and 29-1 RED
Mounting base is black.

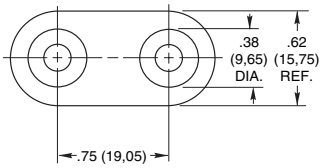

Flared Skirt Style
29-3 BLK and 29-3 RED
Screw post fits 1/2" (12,7) diameter hole for wider spacing.

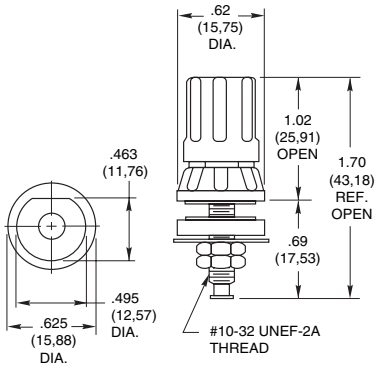

SPECIFICATIONS

Rating Criteria

Rating: At 120 Vdc, 15 Amps continuously, with a maximum temperature rise of 20°C.
Insulation Resistance: Between stud and mounting panel

For 29-1 styles	120,000 megohms
For 29-3 styles	200,000 meghoms

Voltage Breakdown: Between studs and mounting panel

For 29-1 styles	1500 Vac
For 29-3 styles	3000 Vac

Materials and Finishes

Metal Parts: Nickel-plated brass
Insulating Materials: Thermoset plastic per MIL–M–14, Type CFG

Additional Characteristics

Insulating Washers: Non-turn "D" style
Solder Stud: Integral; 2 hex nuts for solder lug connections
Heads: Captive
Cross Hole: Flush to stud extension to eliminate cutting or crimping wires
Panel Thickness: Up to 3/16" (4,76)

ORDERING INFORMATION

Order using part numbers shown in dimensions.

Available from your local Grayhill Distributor. For prices and discounts, contact a local Sales Office, an authorized local Distributor or Grayhill.