Specifications are subject to change. Please refer to the current datasheet on www.grayhill.com for the most current published specifications for this product.

SERIES 84
Unsealed, .750" Centers



FEATURES
- 3/4" Button Centers
- Post Mounted
- Mounts by Grooveless Retaining Rings or Heat Upset Post
- Snap-Dome Contact Provides Positive Feedback

DIMENSIONS in inches (and millimeters)

3x4 Keyboard

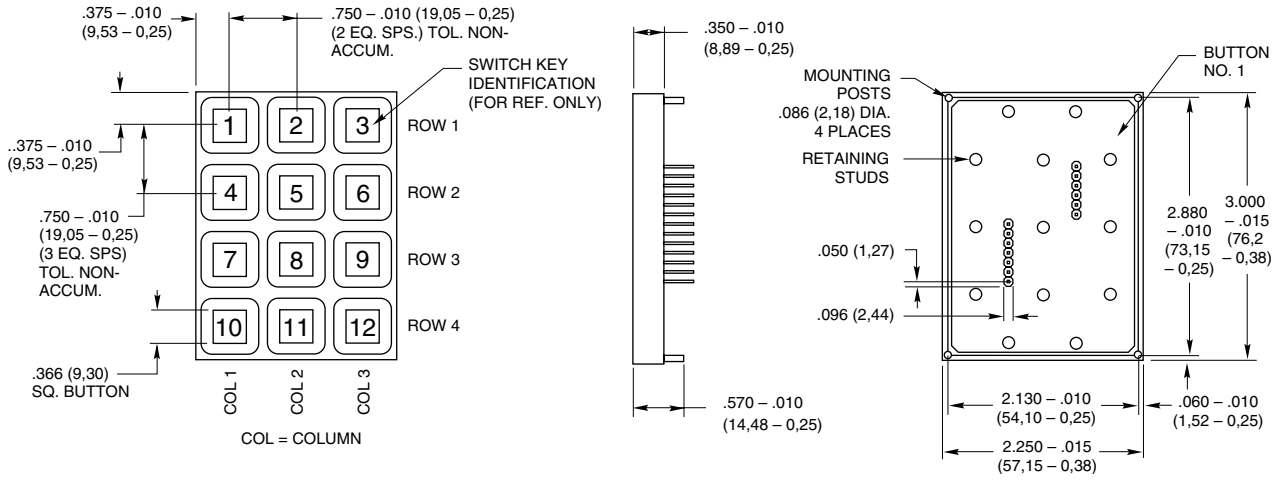

Termination in inches (and millimeters)

3x4 Matrix Output

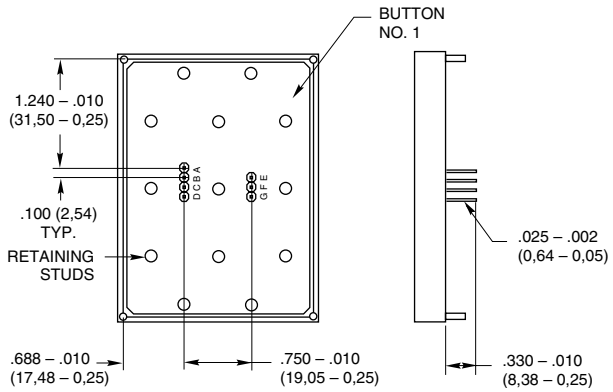

Single Pole/Common Bus

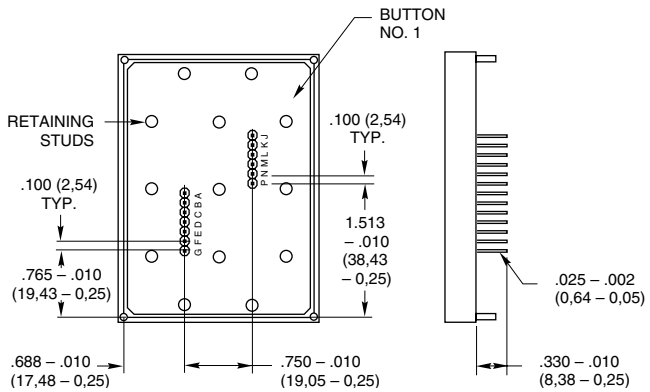

Specifications are subject to change. Please refer to the current datasheet on www.grayhill.com for the most current published specifications for this product.

SERIES 84
Unsealed, .750" Centers



FEATURES
- 3/4" Button Centers
- Post Mounted
- Mounts by Grooveless Retaining Ring or Heat Upset Post
- Snap-Dome Contact Provides Positive Feedback

DIMENSIONS in inches (and millimeters)

4x4 Keyboard

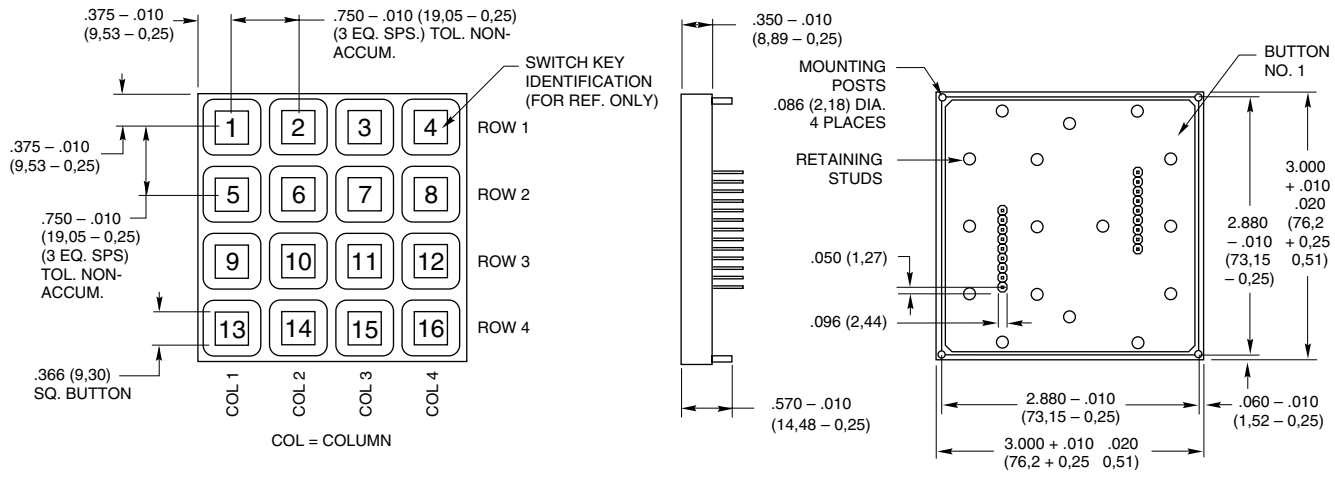

Termination in inches (and millimeters)

4x4 Matrix Output

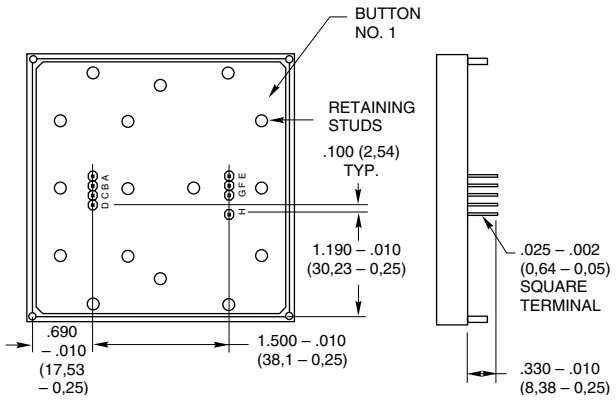

Single Pole/Common Bus

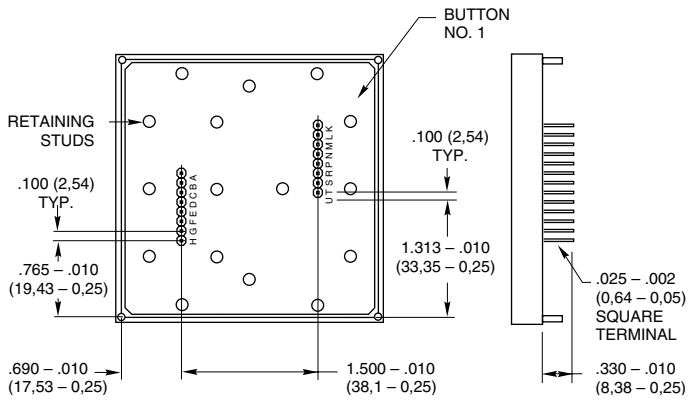

Specifications are subject to change. Please refer to the current datasheet on www.grayhill.com for the most current published specifications for this product.

CODE AND TRUTH TABLES

Dots in the chart indicate connected terminals when switch is closed.
Terminals are identified on the keyboard.

12 Button Keypads

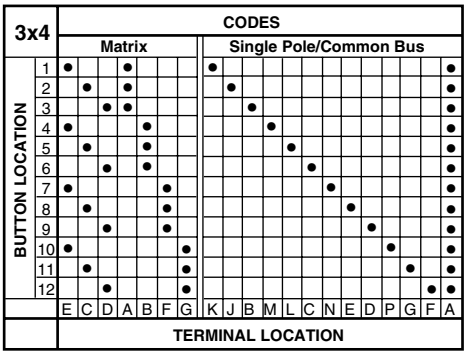

16 Button Keypads

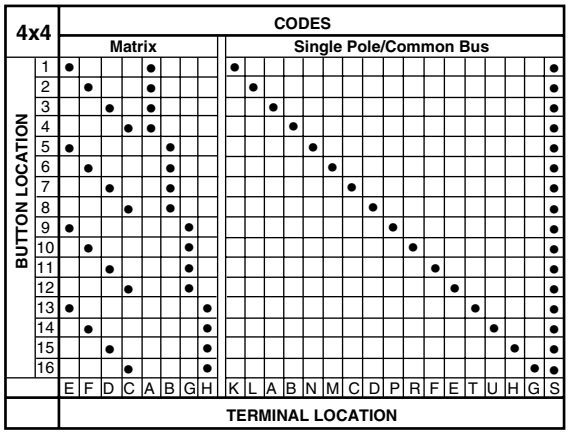

SPECIFICATIONS

Rating Criteria

Rating at 24 Vdc: 10 milliamps, resistive
Contact Resistance: Compatible with MOS, TTL and DTL (10 ohms maximum)
Voltage Breakdown: 250 Vac between mutually insulated parts
Life Expectancy: 3,000,000 operations per button
Contact Bounce: Less than 4 milliseconds at make, 10 milliseconds at break
Operating Temperature: -40°C to +80°C

Materials and Finishes

Housing: Polycarbonate/ABS blend, black; meets UL94V-O
Buttons: ABS plastic, white. Legends are black.
Snap-On-Cap: Clear polycarbonate
Contact Dome: Stainless steel, selectively gold-plated
Terminals: Phosphor bronze

Operating Features

Button Travel: 0.015" (0,38 mm) nominal total travel
Typical Operating Force: 350 grams

STANDARD LEGENDS

Insertable legend version (legend numbers -101 and -001) has a removable cap. The revealed button surface can be legended by an insert or a dry transfer of a blank legend insert. This surface can also be ink stamped by Grayhill in higher volume quantities. When the cap is replaced, the assembly extends approximately .015" (0,38 mm) above the surface. The legend sheet information follows the legend presentation. All other legends incorporate molded-in (two shot) legends.

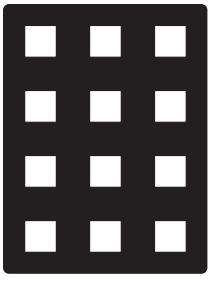

-101 (Insertable)

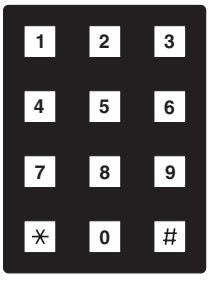

-102 (Molded-in)

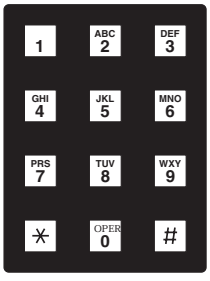

-103 (Molded-in)

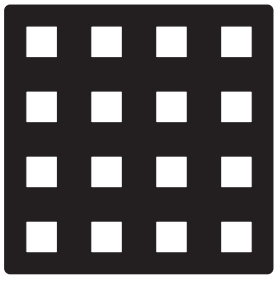

-001 (Insertable)

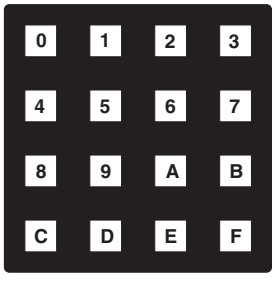

-002 (Molded-in)

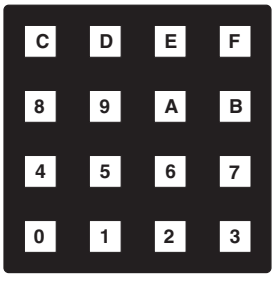

-003 (Molded-in)

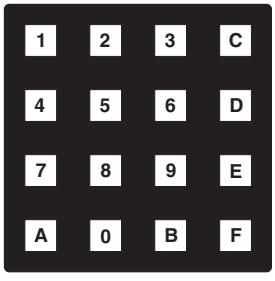

-004 (Molded-in)

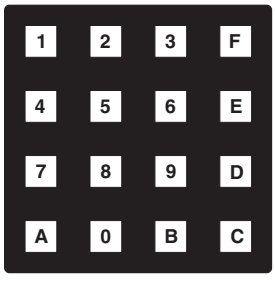

-005 (Molded-in)

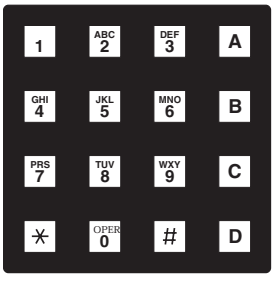

-006 (Molded-in)

INSERTABLE LEGEND SHEETS

For use with -101 or -001 legend option. Legends are die cut to fit button surface when cap is removed.

Description	Part Number
Sheet of Legend Inserts	**87AC2046**

PRINTED LEGENDS

For Maximum Versatility

Printing allows you the flexibility to create your own legend using whole words and symbols with various type styles. Durable epoxy ink printing bonds to the button cap surface. There are two types of button cap printing:

Top Surface Printing: Legend is applied directly to the top of the button. Button is recessed slightly below the keyboard housing.

Sub-Surface Printing: For insertable legend models. Provides maximum wear for printed surfaces. Printed internal button cap is protected by clear snap-on cap.

Printed Typestyles: The typestyle chart illustrates type style, size and approximate character limits for button caps. Grayhill's library of typefaces includes most popular legends.

For prices and discounts, contact a local Sales Office, an authorized local Distributor, or Grayhill.

Type No. and Typical Height	Sample Style and Typical Sizes	Sub Surface Character and Line Limitations	Top Surface Character and Line Limitations
4GH088 .083"	ABCDEFGH	4 Characters 2 Lines END DATA	4 Characters 2 Lines END DATA
1GH125 .138"	ABCDE	3 Characters 1 Line LAD	3 Characters 1 Line LAD
3GH187 .207"	ABCD	2 Characters 1 Line ON	2 Characters 1 Line ON
2GH250 .276"	ABC	N/A N/A	2 Characters 1 Line 15

ORDERING INFORMATION: Special Legends

Follow this procedure:

1. **Basic Keyboard.** Formulate the part number with the exception of the legend suffix.
2. **Mounting.** Standard mounting is shown in our dimensional drawings. These drawings relate the terminal location to the button legend orientation. It is possible to rotate the button legends by 90°, changing the orientation. When mounting the keypad, it would be rotated 90° to have the legends appear upright. A 3x4 keypad thus becomes a 4x3.
3. **Color.** Many colors, other than our standard black housing, are available. Buttons can be made from equivalent plastic in black, red, green, blue and yellow. White legends are used with dark color buttons, black with light ones. Other colors available on special order.
4. **Buttons.** Legends can be printed on button surface and protected by a snap-on cap in a similar fashion to our insertable legend types. A second option is printing a 'blank' button. (One that has the same dimensions as a molded-in legend button with a flat top surface.) Disadvantage is legend wear over time. A third option is molded-in legends, usually requiring tooling. Molded buttons are available with a flat or concave top surface.
5. **Legends.** Specify the legend requirements for each button. Identify buttons per our dimensional drawings. Caution if keypad has been rotated.

ORDERING INFORMATION

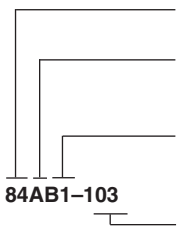

Grayhill Series Number

Size Option
A = 3x4
B = 4x4

Circuitry Option
B1 = Matrix code
C1 = Single pole/common bus

Standard Legend Choices
3x4 Size: -101, -102 or -103
4x4 Size: -001, -002, -003, -004, -005 or -006

Available from your local Grayhill Distributor. For prices and discounts, contact a local Sales Office, an authorized local Distributor or Grayhill.