SERIES 84S
Sealed

FEATURES
- Waterproof Silicone Rubber
- Easily Customized Legends
- Audible, Tactile Contacts
- Low Contact Resistance
- Optional RFI/EMI Shielding
- 3,000,000 Operations per Button



DIMENSIONS In inches (and millimeters)

1 Button Module

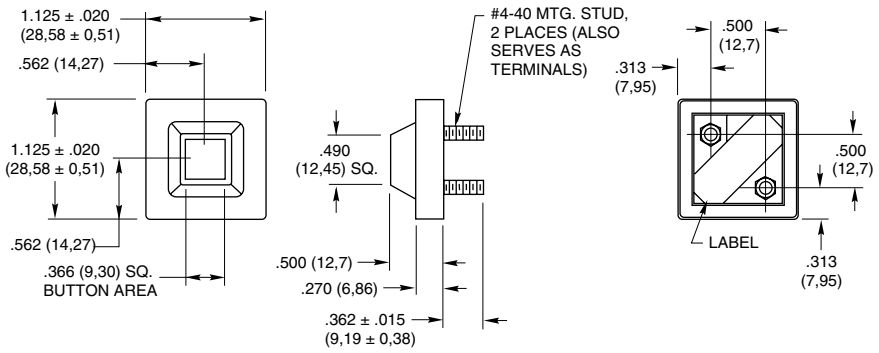

Unless otherwise noted, linear dimension tolerances are ± .010 (0,25)

CIRCUITRY

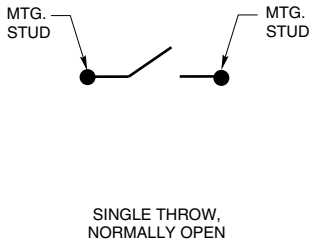

Note: Mounting studs serve as terminals.

3x4 Keyboard

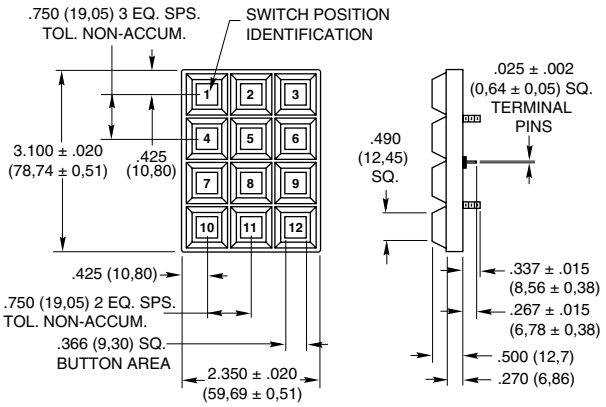

Matrix Output

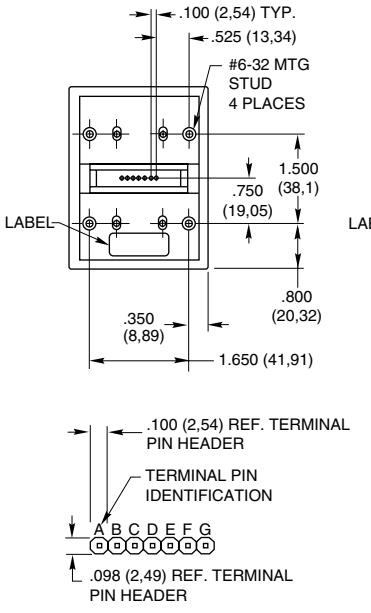

Single Pole/Common Bus

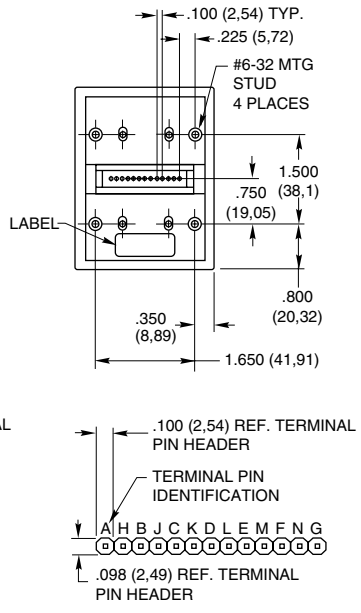

DIMENSIONS In inches (and millimeters)

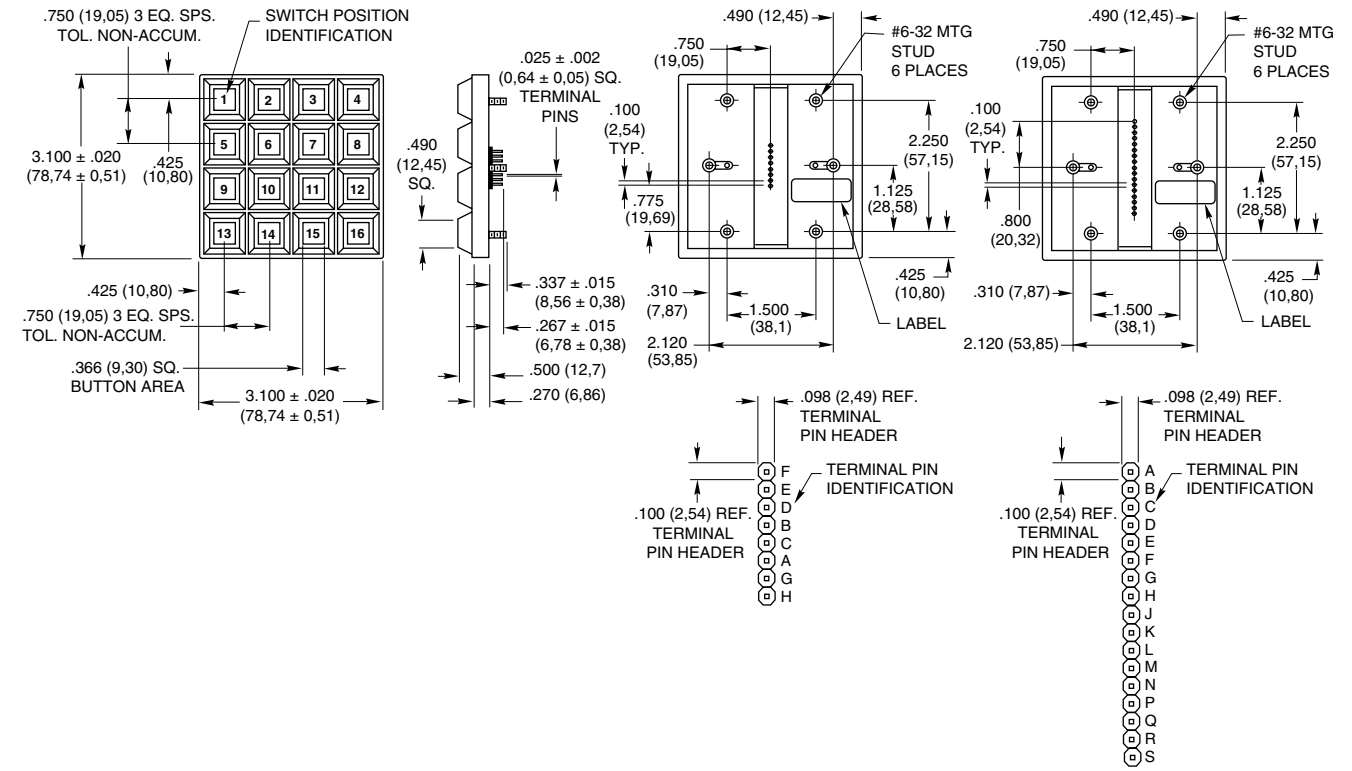

CODE AND TRUTH TABLES

Dots in the chart indicate connected terminals when switch is closed. Terminals are identified on the keyboard.

12 Button Keypads

3x4	CODES															
	Matrix						Single Pole/Common Bus									
BUTTON LOCATION 1	●			●			●									●
2		●		●				●								●
3			●	●					●							●
4	●				●					●						●
5		●			●						●					●
6			●		●							●				●
7	●					●							●			●
8		●				●								●		●
9			●			●									●	●
10	●					●										●
11		●				●										●
12			●			●										●
	C	B	A	G	F	E	D	E	C	B	F	D	A	N	K	H	M	L	J	G
	TERMINAL LOCATION																			

16 Button Keypads

4x4	CODES																											
	Matrix								Single Pole/Common Bus																			
BUTTON LOCATION 1	●					●			●																			●
2		●				●				●																		●
3			●			●					●																	●
4				●		●						●																●
5	●						●						●															●
6		●					●							●														●
7			●				●								●													●
8				●			●									●												●
9	●							●									●											●
10		●						●										●										●
11			●					●											●									●
12				●				●												●								●
13	●							●													●							●
14		●						●														●						●
15			●					●															●					●
16				●				●																●				●
	A	B	C	D	E	F	G	H	D	B	A	C	H	F	E	G	K	M	L	J	P	R	Q	N	S			
	TERMINAL LOCATION																											

SPECIFICATIONS

Rating Criteria

Rating at 24 Vdc: ≤10 milliamps resistive
Contact Bounce: 4 milliseconds maximum at make; 10 milliseconds at break
Contact Resistance: MOS, TTL, and DTL compatible. (10 ohms maximum)
Life Expectancy: 3 million operations/button
Insulation Resistance: □1,000 megohms

Operating Features

Pre-Travel: .030 inches minimum
Operating Temperature: -55°C to 85°C
Operating Force: 20 ± 4 ounces
Humidity: 0 to 98% (no condensation)
Minimum Push Out Force Per Pin: 5 pounds

Materials and Finishes

Terminal Pins: Copper alloy CDA 725, solder-plated
PC Board: FR-4 glass cloth epoxy
Contact Dome: Stainless steel, selectively gold-plated
Dome Retainer/Rear Seal Sheet: Polyester
Mounting Studs: Phosphor bronze
Optional Hex Nut: Stainless steel, passivated
Optional EMI Shield: Aluminum foil
Keypad: Silicone rubber
Buttons: ABS Cycolac, grade FR15U

Shielding Effectiveness

Results shown are typical for a standard Grayhill Series 84S Keyboard. A conductive gasket will generally increase the shielding, depending on the size and shape of the gasket and its material. Data derived for E-Field Radiation.

Grayhill, Inc. • 561 Hillgrove Avenue • LaGrange, Illinois 60525-5997 • USA • Phone: 708-354-1040 • Fax: 708-354-2820 • www.grayhill.com

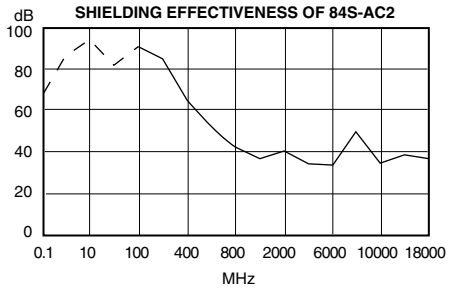

– – Represents shielding effectiveness greater than or equal to line.

Frequency MHz	Rating in dB
0.1	66.2
10	94.8
100	90.5
400	64.2
800	42.3
2,000	40.5
6,000	33.1
10,000	34.4
18,000	37.0

Test Method:
Measurements were made with the keyboard mounted to a brass plate, which in turn was mounted to a shielded enclosure containing the receiving equipment. A signal generator provided the frequency source that was radiated from the transmitting antenna to the enclosed receiving antenna. The spacing between antennas was maintained constant throughout the frequency range. The effectiveness rating is determined by establishing a reference reading without obstruction between the two antennas and determining the difference between that reading and the test setup reading.

Note:
When measured in actual equipment, shielding effectiveness is determined by many factors. This method accurately represents the shielding effectiveness of the Grayhill Series 84S under ideal test conditions.

STANDARD LEGENDS

Available through Grayhill Distributors

To order one of the configurations below, use the dash number shown here; select the keypad size and code, and order the part number with the appropriate legend dash number. The buttons in these keypads can be removed, and reinserted in any configuration.

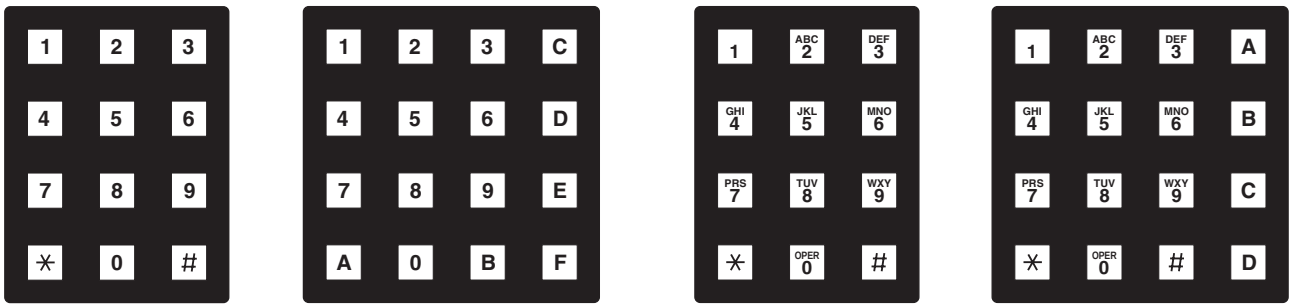

-112 -014 -113 -016

CUSTOM LEGENDS

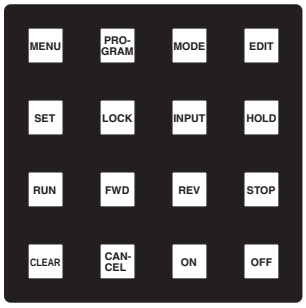

Library of Legends

Grayhill maintains a legend library which contains the most often requested special legends and many unusual ones. If the legend is in the library, the cost to utilize this legend in your keypad configuration is minimal. If the legend is not available, Grayhill can list the charges required to add your legend to the library. In this manner, new legends are added on a periodic basis. Custom legends to fit your unique requirements may not be as expensive as you think, contact Grayhill.

Adding Color

Use colored buttons to segregate button groupings or to provide originality. Available in black legends on white or yellow buttons, or in white legends on black, green, red or blue buttons. Two popular combinations, black on white and white on black, are available from Grayhill stock. Delivery time will increase for other color combinations.



HEADER CONNECTORS

Compatible with: Samtec, Inc. Header Series BCS, BSW, CES, ESW, ESQ, SLW, SSW, SSQ, IDSS and IDSD or equivalent.

Available from your local Grayhill Distributor. For prices and discounts, contact a local Sales Office, an authorized local Distributor or Grayhill.

ORDERING INFORMATION

84S-AC2-113-N

Grayhill Series Number

Shielded or Non-Shielded Option
S = Shielded; SN = Non-Shielded

Size Option: A = 3x4; B = 4x4; C = 1 Button

Circuitry Option *(B2 and C2 not applicable to 1 button)*
B2 = Matrix in-line pins
C2 = Single pole/common bus, in-line pins
C3 = 1 Button, SPST–N.O., non-shielded only

Mounting Nut Option
N = Provided with hex nuts for mounting; Blank = Nuts not provided

Standard Legend Choices
3x4 Size: -112 or -113; -000, No buttons; -101, Blank Buttons
4x4 Size: -014 or -016; -000, No buttons; -001, Blank Buttons
1 Button Size: -001, No legend, white button