SERIES 86

Unsealed, .500" Centers, Flange Mounted



FEATURES

- 1/2" Button Centers
- Flange Mounted
- Top Surface or Sub Surface Mounting
- Snap-Dome Contact Provides Positive Feedback

DIMENSIONS in inches (and millimeters)

3x4 Keyboard

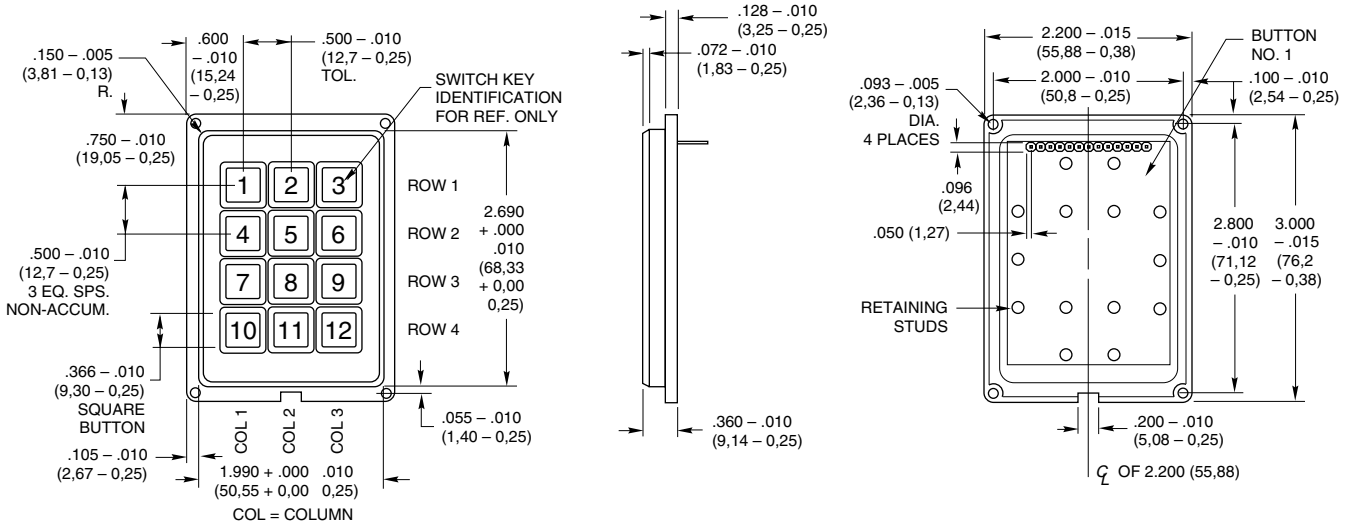

Termination in inches (and millimeters)

3x4

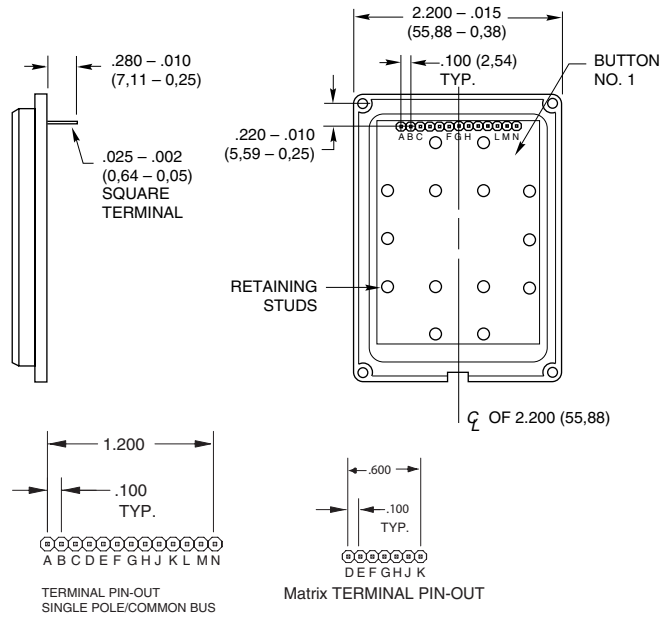

Code and Truth Table

Dots in the chart indicate connected terminals when switch is closed. Terminals are identified on the keyboard.

3x4	CODES	
	Matrix	Single Pole/Common Bus
BUTTON LOCATION 1	●	● ●
2	●	● ●
3	● ●	● ●
4	●	● ●
5	● ●	● ●
6	● ●	● ●
7	●	● ●
8	● ●	● ●
9	● ●	● ●
10	●	● ●
11	● ●	● ●
12	● ●	● ●
	F E D K J H G	J E A K F B L G C M H D N
	TERMINAL LOCATION	

SERIES 86

Unsealed, .500" Centers, Flange Mounted



FEATURES

- 1/2" Button Centers
- Flange Mounted
- Top Surface or Sub Surface Mounting
- Snap-Dome Contact Provides Positive Feedback

DIMENSIONS in inches (and millimeters)

4x4 Keyboard

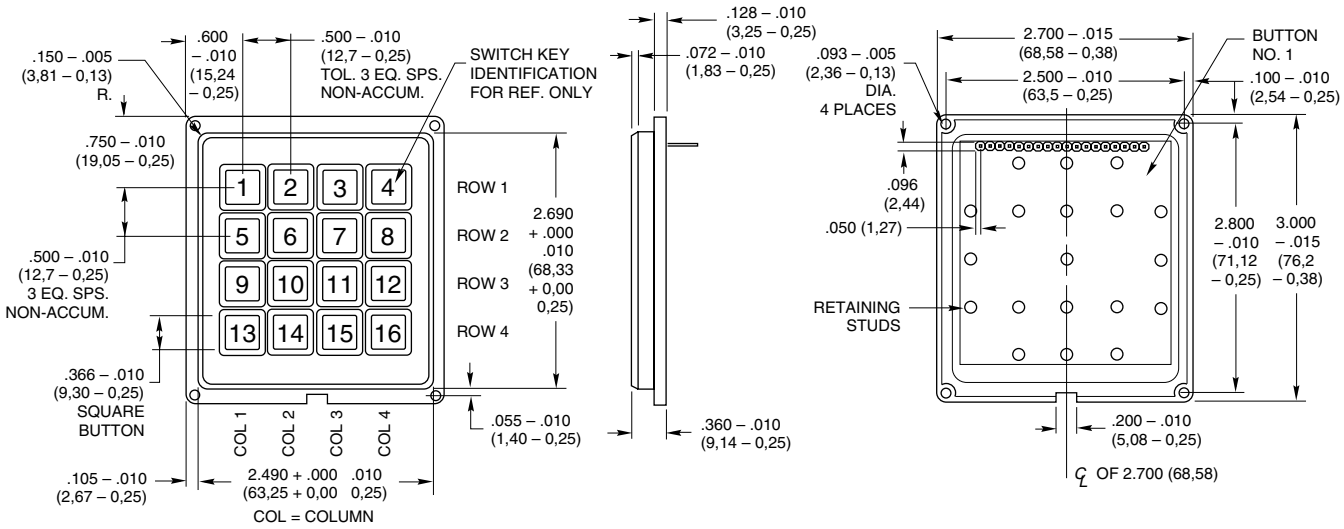

Termination in inches (and millimeters)

4x4

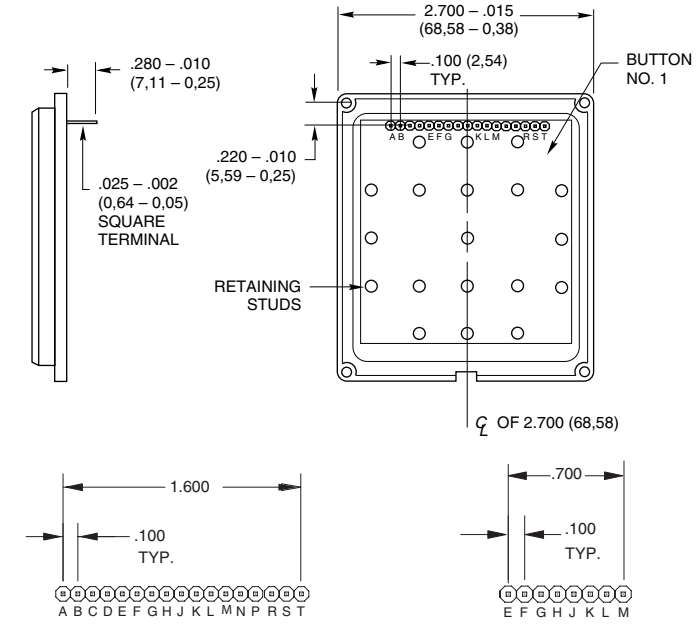

SINGLE POLE COMMON BUS TERMINAL

MATRIX TERMINAL PIN-OUT

Code and Truth Table

Dots in the chart indicate connected terminals when switch is closed. Terminals are identified on the keyboard.

4x4	CODES	
	Matrix	Single Pole/Common Bus
BUTTON LOCATION	TERMINAL LOCATION	

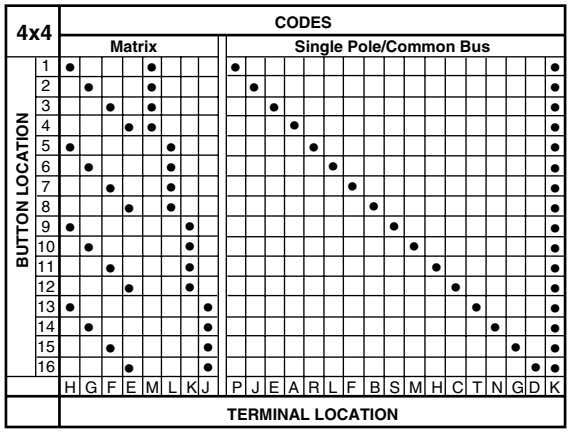

SERIES 86

Unsealed, .500" Centers, Flange Mounted



FEATURES

- 1/2" Button Centers
- Flange Mounted
- Top Surface or Sub Surface Mounting
- Snap-Dome Contact Provides Positive Feedback

DIMENSIONS in inches (and millimeters)

5x4 Keyboard

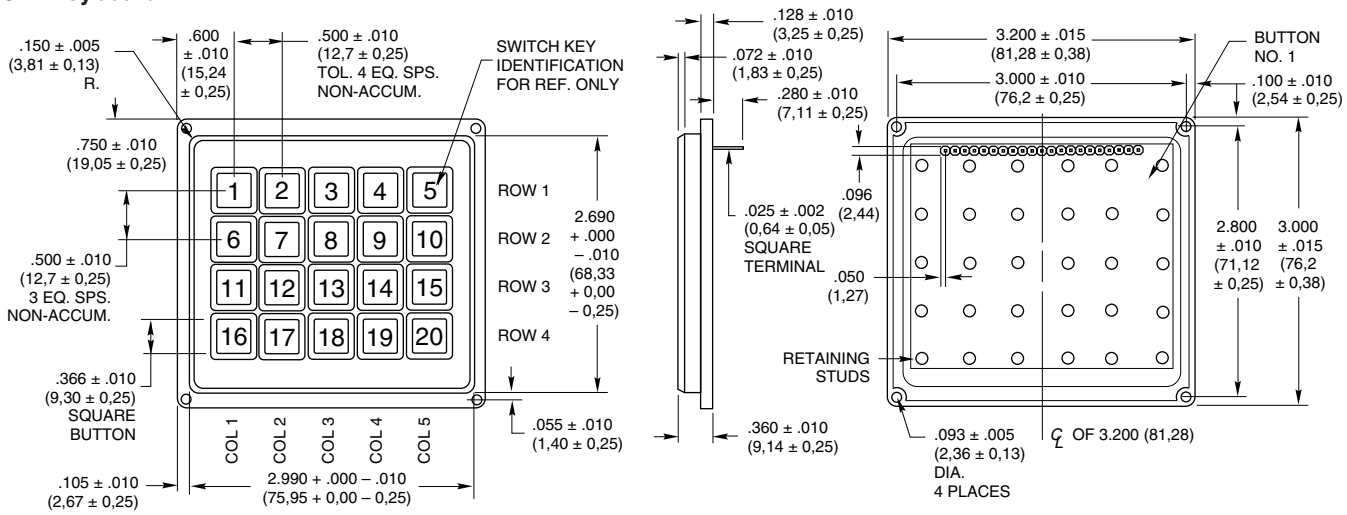

Termination in inches (and millimeters)

5x4

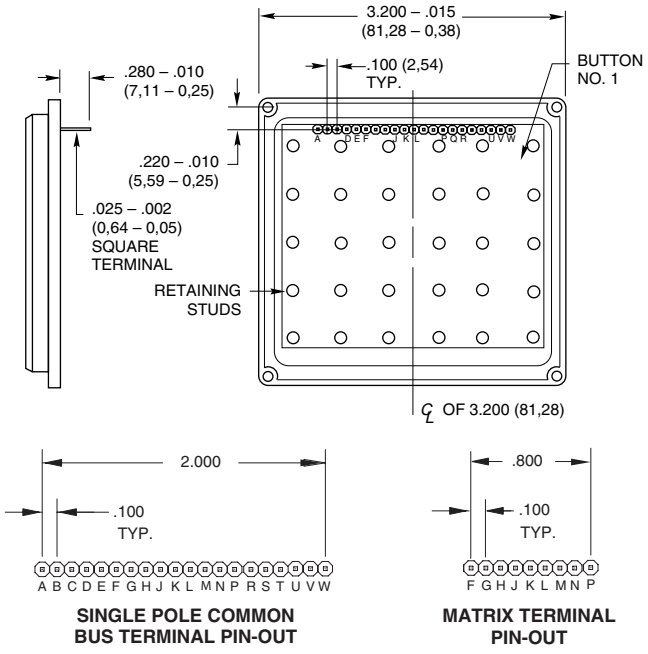

Code and Truth Table

Dots in the chart indicate connected terminals when switch is closed. Terminals are identified on the keyboard.

5x4	CODES	
	Matrix	Single Pole/Common Bus
BUTTON LOCATION	TERMINAL LOCATION	

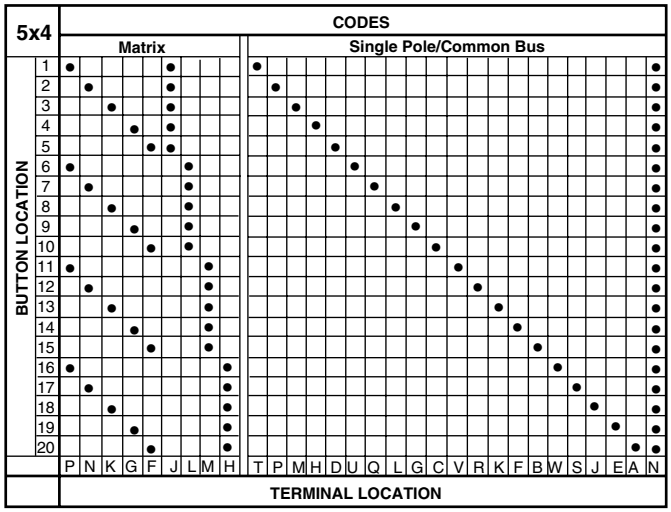

SPECIFICATIONS

Rating Criteria

Rating at 24 Vdc: 10 milliamps, resistive
Contact Resistance: Compatible with MOS, TTL and DTL (10 ohms maximum)
Voltage Breakdown: 250 Vac between mutually insulated parts
Life Expectancy: 3,000,000 operations per button
Contact Bounce: Less than 4 milliseconds at make, 10 milliseconds at break
Operating Temperature: -40°C to +80°C

Materials and Finishes

Housing: ABS polycarbonate, black
Buttons: ABS plastic, white. Legends are black.
Snap-On-Cap: Clear polycarbonate
Contact Dome: Stainless steel, selectively gold- plated
Terminals: Phosphor bronze

Operating Features

Button Travel: 0.015" nominal total travel
Typical Operating Force: 350 grams

STANDARD LEGENDS

Insertable legend version (legend numbers -101, -001, -201 and row or column indicated in -202 and -203) has a removable cap. The revealed button surface can be legended by an insert or a dry transfer of a blank legend insert. This surface can also be ink stamped by Grayhill in higher volume quantities. When the cap is replaced, the assembly extends approximately .015" (0,38 mm) above the surface. The legend sheet information follows the legend presentation. All other legends incorporate molded-in (two shot) legends with the exception of legend numbers -202 and -203. The blank legends or spaces in legends -202 and -203 are insertable legends, others are molded-in.

5x4: Shown below

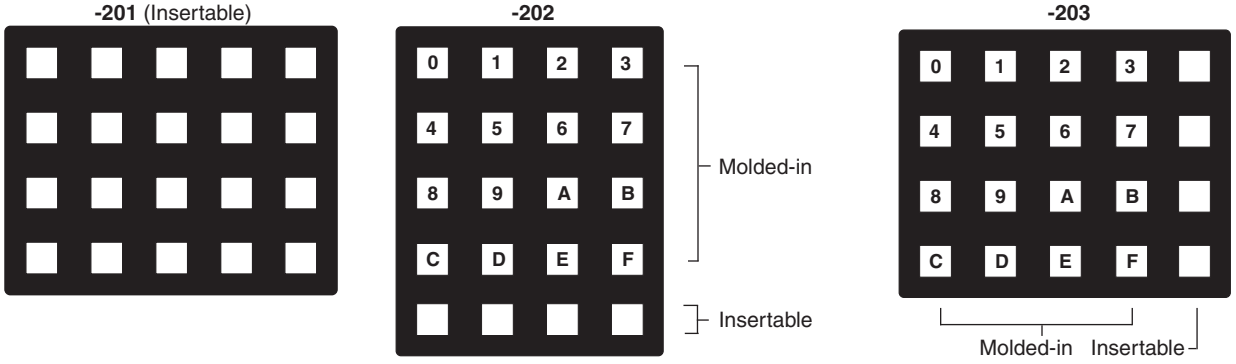

INSERTABLE LEGENDS

For use with -101, -001, -201, -202 and -203 legend options. Legends are die cut to fit button surface when cap is removed. Dry transfer legends offer some flexibility to customize the blank inserts included on the sheet of popular legend letters, words and symbols provided or on the insertable legends sheet.

Description	Part No.
Sheet of Legend Inserts	**87AC2046**
Dry Transfer Lettering, Small	**87-DT-2096-088**
Dry Transfer Lettering, Medium	**87-DT-2096-125**
Dry Transfer Lettering, Large	**87-DT-2096-187**

ORDERING INFORMATION

86AB2–103

Grayhill Series Number
Size Option
A = 3x4
B = 4x4
J = 5x4
Circuitry Option
B2 = Matrix code
C2 = Single pole/common bus
Standard Legend Choices
3x4 Size: -101, -102 or -103
4x4 Size: -001, -002, -003, -004, -005 or -006
5x4 Size: -201, -202, or -203

Available from your local Grayhill Distributor. For prices and discounts, contact a local Sales Office, an authorized local Distributor or Grayhill.