1.5kVrms DC/DC Converter

6 Pin SMD or DIL Isolation Modules

HALO ELECTRONICS, INC.



Product Features:

- Provide the isolation and voltage outputs required for small, low cost DC/DC converter circuits.
- Designed specifically for use with the Maxim™ MAX253, MAX845, and MAX3535/MXL1535 drivers
- Isolation Voltage: 1,500 Vrms. Other packages are available with isolation voltages up to 4.5KVrms.
- UL60950 and EN60950 approved.
- Temperature Range: -40 to +85°C

SMD Part Number	DIL Part Number	Turns Ratio (±3%) PRI : SEC	PRI LL (µH Typ.)	PRI OCL (µH Typ.)	PRI DCR (Ω Max.)	ET Constant (V-µs Min.)
TGM-210NSLF	TDM-210NELF	2CT:1CT	0.40	960	0.8	11
TGM-220NSLF	TDM-220NELF	8CT:3CT	0.40	960	0.8	11
TGM-230NSLF	TDM-230NELF	4CT:3CT	0.40	960	0.8	11
TGM-240NSLF	TDM-240NELF	3CT:4CT	0.40	960	0.8	11
TGM-250NSLF	TDM-250NELF	1CT:1CT	0.40	960	0.8	11
TGM-280NSLF	TDM-280NELF	3CT:8CT	0.40	960	0.8	11

Notes:
1. Primary Pins: 1-3
2. 2kV isolation transformers available – contact factory
3. For more information, pertaining to the MAX845 please contact Maxim at (408) 737-7600.
4. Maxim is a registered trademark of Maxim Integrated Products.

Schematic

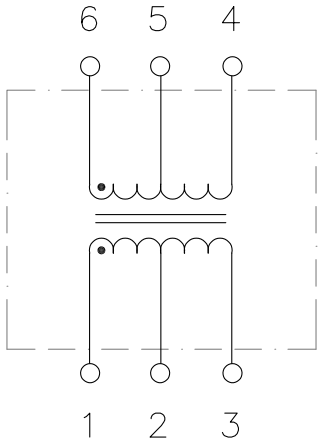

For additional information contact your local representative, or HALO's support staff at (650) 903-3800 or info@haloelectronics.com

6 Pin, 1.5kVrms DC/DC Converter Isolation Modules

SMD Package (NS)

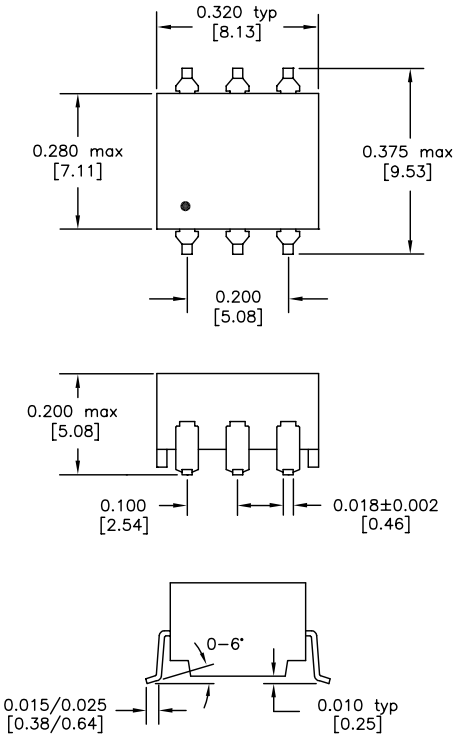

Dimensions: inches [mm]
Co-Planarity: 0.004 [0.10]

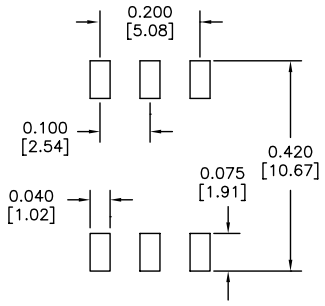

Recommended
Solder Pad Dimensions

DIL Package (NE)

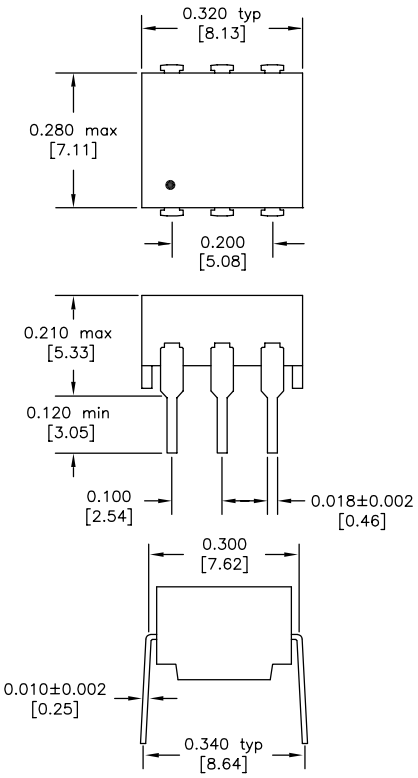

US Patent Numbers for SMD Devices

5,656,985	6,297,721 B1
6,297,720 B1	6,320,489 B1
6,344,785 B1	6,662,431 B1

HALO ELECTRONICS, INC.
2880 Lakeside Drive #116
Santa Clara, CA 95054
(650) 903-3800
www.haloelectronics.com

HALO® Electronics is a leading supplier of high quality communication magnetics including signal transformers, filters, CMR chokes, PoE power transformers, DC/DC converters, and integrated Ethernet connectors. HALO's leading edge technology solutions are manufactured in ISO9001 and ISO14001 factories offering high quality products at a competitive price.

© Copyright 2014 HALO Electronics, Inc. All rights reserved.

Revised 5/2014 Download the latest version at www.haloelectronics.com/pdf/discrete-dc2dc-6pin15kv.pdf

Maxim MAX253/MAX845
DC/DC Converter Application Note

The TDM and TGM series of transformers have been designed specifically for use with the Maxim™ MAX253 and MAX845 monolithic oscillator/power driver with 3.3V or 5V power source. Multiple output voltages can be achieved depending on the diode circuit and transformer selected. For more information, pertaining to the MAX253/MAX845 please contact Maxim at (408) 737-7600. Maxim is a registered trademark of Maxim Integrated Products.

Bridge Rectifier Circuit

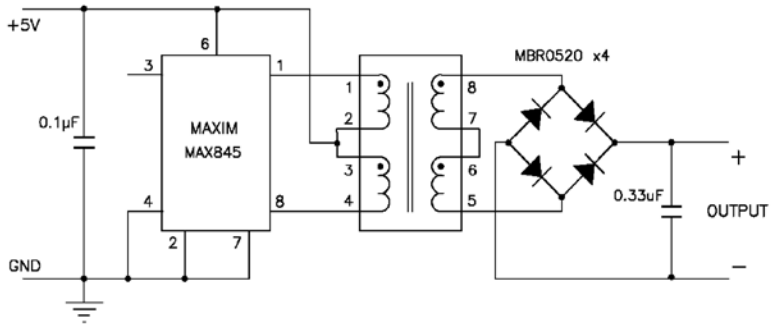

Output Voltages

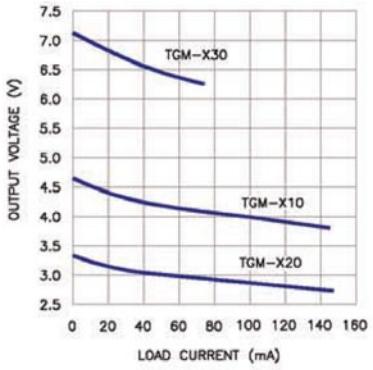

Doubler Circuit

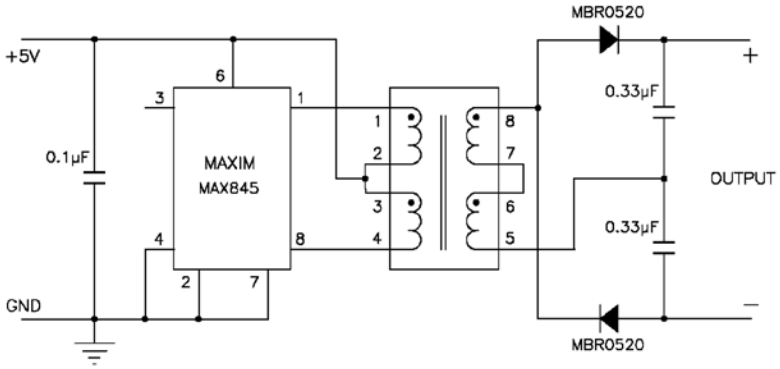

Output Voltages

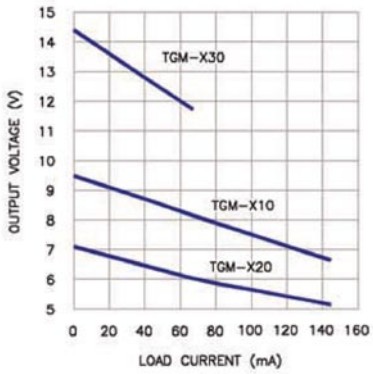

Full Wave Rectifier Circuit

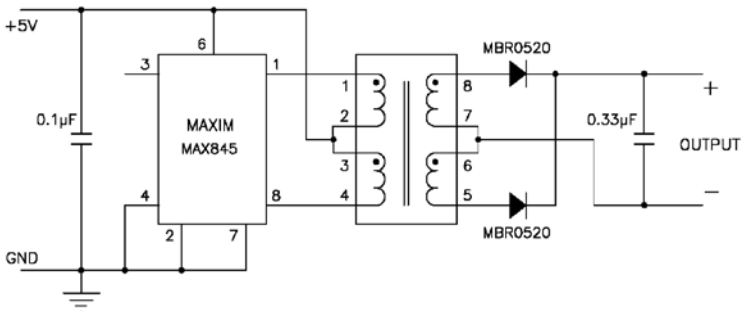

Output Voltages

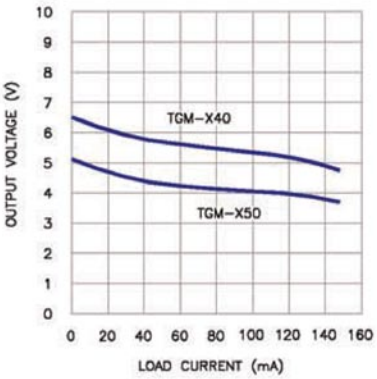

For additional information contact your local representative, or HALO's support staff at (650) 903-3800 or info@haloelectronics.com