8 Pin, 4.5kVrms DC/DC Converter Isolation Modules



The TGMR-4xxV8LF, reinforced insulation, 8 pin transformer series provides the isolation and voltage outputs required for low cost DC/DC converter circuits. Designed specifically for use with the Maxim™ MAX253 and MAX845 monolithic oscillator/power drivers with 3.3V or 5V power source. UL60950 and EN60950 recognized. As well, this series is ROHS compliant and "lead free". Smaller packages are available for lower isolation voltage applications. For more information, pertaining to the MAX253 or MAX845 please contact Maxim at (408) 737-7600.

V8 SMD Package

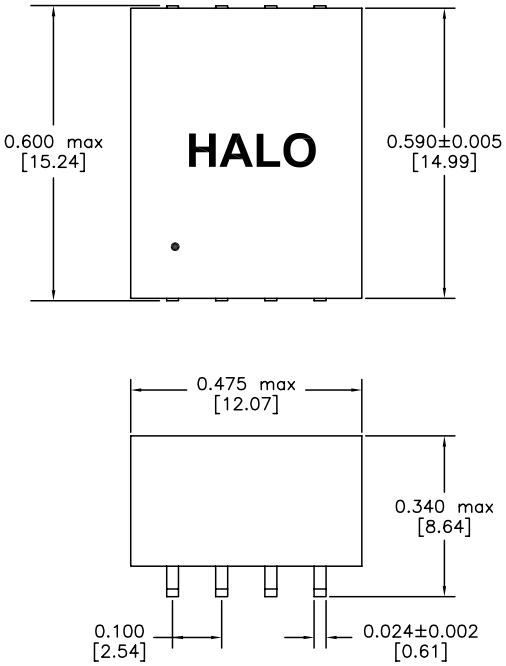

DIMENSIONS: Inch [mm]
CO-PLANARITY: 0.004 [0.10]

Circuit Diagram

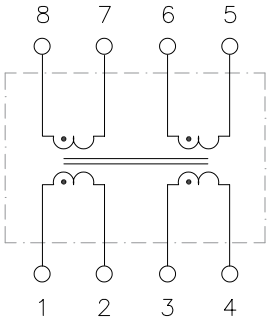

Electrical Specifications @ 25°C

PRI Pins:	1-4 (tie pins 2-3)
Insulation:	Reinforced, 300V working voltage
Operating Temp:	-40 to +85°C

Part Number SMD	Turns Ratio +/-3% PRI : SEC	OCL Typ. µH	PRI DCR Ω Max	ET Constant V-µs Min.	Isolation Vrms
TGMR-410V8LF	1CT:0.50CT	500	0.9	18	4,500
TGMR-420V8LF	1CT:0.375CT	500	0.9	18	4,500
TGMR-430V8LF	1CT:0.75CT	500	0.9	18	4,500
TGMR-440V8LF	1CT:1.33CT	640	0.9	20	4,500
TGMR-450V8LF	1CT:1CT	800	0.9	22	4,500

HALO Electronics • 2880 Lakeside Drive, Suite 116 • Santa Clara, CA 95054 • PH: 650-903-3800
www.haloelectronics.com • info@haloelectronics.com • This Datasheet: tgm-nf.pdf Rev. 6/2013

8 Pin, 4.5kVrms DC/DC Converter Isolation Modules
Designed for Maxim MAX253 and MAX845

8 Pin, 4.5kVrms DC/DC Converter Isolation Modules

8 Pin, 4.5kVrms DC/DC Converter Isolation Modules



The TGM-NF, reinforced insulation, 8 pin transformers provide the isolation and voltage outputs required for low cost DC/DC converter circuits. UL1950, IEC950 and EN60950 recognized. Designed specifically for use with the Maxim™ MAX253 and MAX845 monolithic oscillator/power drivers with 3.3V or 5V power source. Smaller packages are available for lower isolation voltage applications. For more information, pertaining to the MAX845 please contact Maxim at (408) 737-7600. Maxim is a registered trademark of Maxim Integrated Products.

NF Package

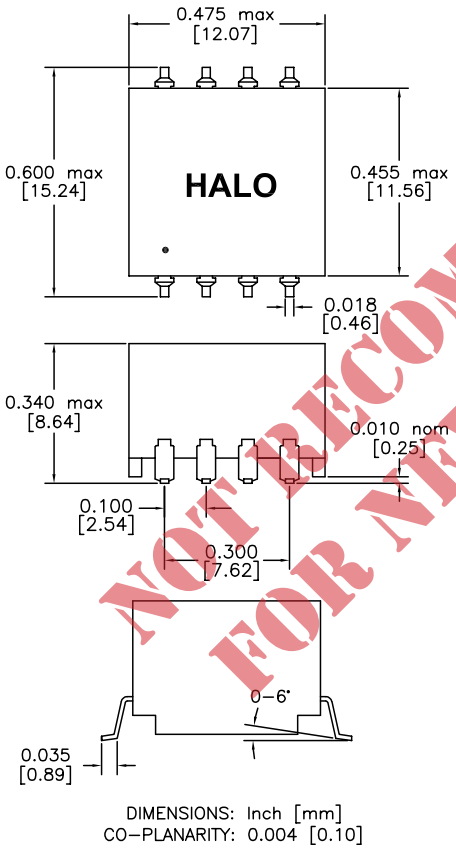

DIMENSIONS: Inch [mm]
CO–PLANARITY: 0.004 [0.10]

Circuit Diagram

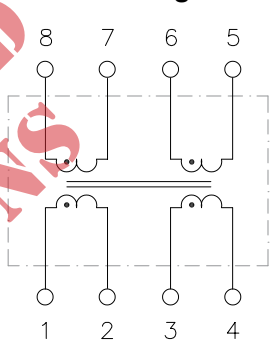

NOT RECOMMENDED FOR NEW DESIGNS

Electrical Specifications @ 25°C
- Operating Temp: -40 to +85°C
- Pri DCR: 0.8Ω
- Pri OCL (1-4, tie 2-3): 500µH typ

Patented Construction
US Pat Nbrs: 5,656,985 6,297,721 B1 6,297,720 B1 6,320,489 B1 6,344,785 B1 6,662,431 B1

Part Number	Turns Ratio (±3%) PRI:SEC	ET Constant Vµs Min	Isolation Vrms
TGM-410NF	2CT:1CT	18	4,500
TGM-420NF	8CT:3CT	18	4,500
TGM-430NF	4CT:3CT	18	4,500
TGM-440NF	3CT:4CT	18	4,500
TGM-450NF	1CT:1CT	18	4,500

8 Pin, RoHS 4.5kVrms DC/DC Converter Isolation Modules

8 Pin, RoHS 4.5kVrms DC/DC Converter Isolation Modules

The TGM-NF, reinforced insulation, 8 pin transformers provide the isolation and voltage outputs required for low cost DC/DC converter circuits. UL1950, IEC950 and EN60950 recognized. Designed specifically for use with the Maxim™ MAX253 and MAX845 monolithic oscillator/power drivers with 3.3V or 5V power source. Smaller packages are available for lower isolation voltage applications. For more information, pertaining to the MAX845 please contact Maxim at (408) 737-7600. Maxim is a registered trademark of Maxim Integrated Products.



RoHS COMPLIANT

NF Package

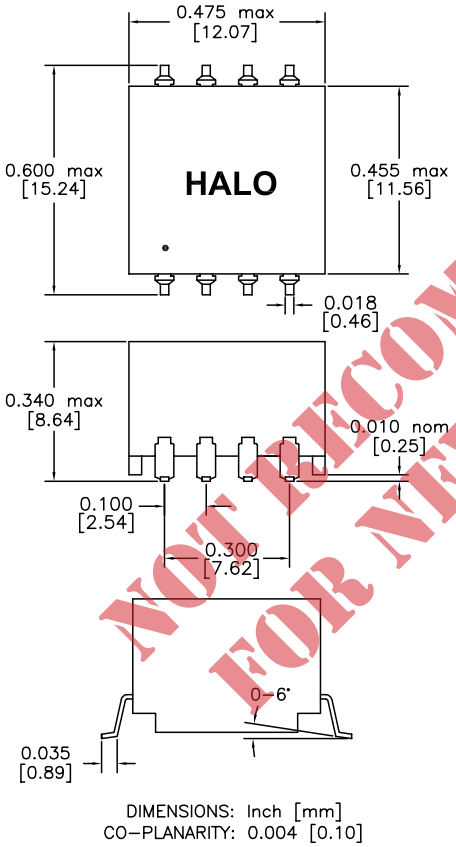

DIMENSIONS: Inch [mm]
CO-PLANARITY: 0.004 [0.10]

Circuit Diagram

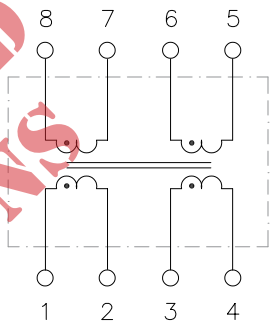

NOT RECOMMENDED FOR NEW DESIGNS

Electrical Specifications @ 25°C
- Operating Temp: -40 to +85°C
- Pri DCR: 0.8Ω
- Pri OCL (1-4, tie 2-3): 500µH typ

Patented Construction
US Pat Nbrs: 5,656,985 6,297,721 B1 6,297,720 B1 6,320,489 B1 6,344,785 B1 6,662,431 B1

Part Number	Turns Ratio (±3%) PRI:SEC	ET Constant Vµs Min	Isolation Vrms
TGM-410NFRL	2CT:1CT	11	4,500
TGM-420NFRL	8CT:3CT	11	4,500
TGM-430NFRL	4CT:3CT	11	4,500
TGM-440NFRL	3CT:4CT	11	4,500
TGM-450NFRL	1CT:1CT	11	4,500

8 Pin, 4.5kVrms DC/DC Converter Isolation Modules

8 Pin, 4.5kVrms DC/DC Converter Isolation Modules

The TGM-NF, reinforced insulation, 8 pin transformers provide the isolation and voltage outputs required for low cost DC/DC converter circuits. UL1950, IEC950 and EN60950 recognized. Designed specifically for use with the Maxim™ MAX253 and MAX845 monolithic oscillator/power drivers with 3.3V or 5V power source. Smaller packages are available for lower isolation voltage applications. For more information, pertaining to the MAX845 please contact Maxim at (408) 737-7600. Maxim is a registered trademark of Maxim Integrated Products.

Bridge Rectifier Circuit

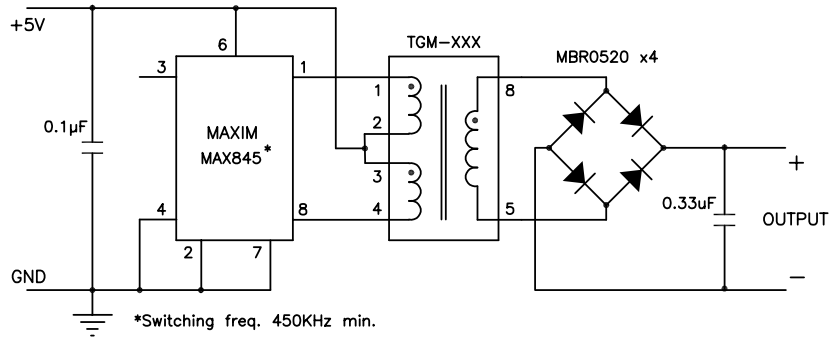

Output Voltages

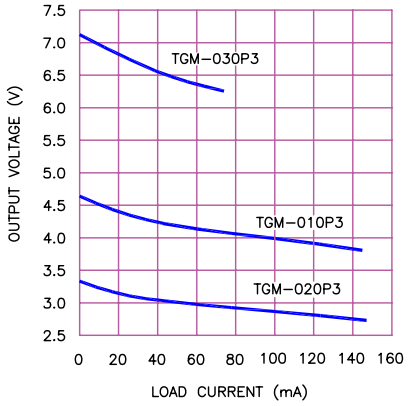

Doubler Circuit

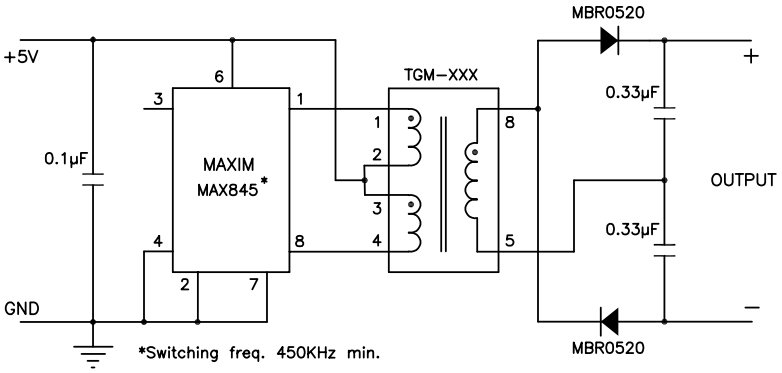

Output Voltages

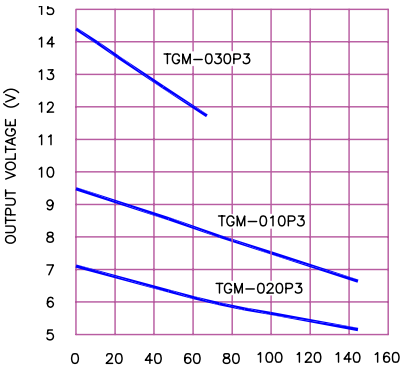

Full Wave Rectifier Circuit

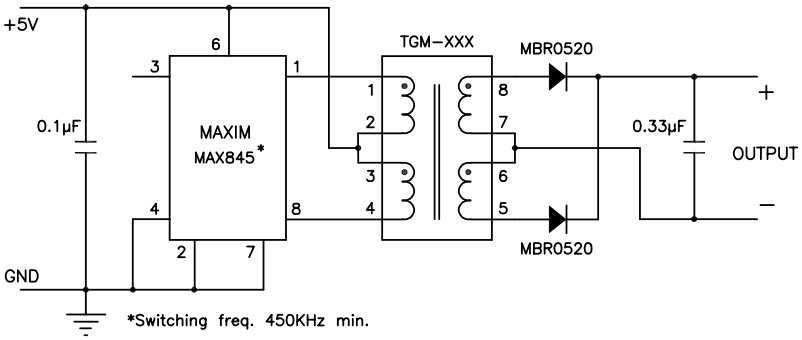

Output Voltages

