30 Watt POE+ Power Transformers

EFD20 Package for Akros Silicon AS1135

HALO ELECTRONICS, INC.



Product Features:

- Designed for PoE+ isolated flyback DC/DC converter applications using the Akros Silicon AS1135
- Utilizes industry standard style footprint
- UL/EN60950 recognized
- Fully compliant to IEEE802.3at standard
- Isolation Voltage (PRI-SEC) 1,500Vrms
- Operating Tempature Range -40 to +85C

Part Number	Turns Ratio N1:N2:N3:N4:N5:N6	DCR (mΩ max)	PRI/OCL (µH ±10%)	PRI LL (µH ±10%)	Output Voltage	Circuit
TGSP-P026EFD20LF	1:1:0.25:0.2:0.2:0.25	50,300,10,300	40	0.8	5V	A
TGSP-P027EFD20LF	1:1:0.25:0.125:0.125:0.25	60,350,8,350	57	1.2	3.3V	A
TGSP-P028EFD20LF	1:1:0.167:0.333:0.333	150,300,50	112	1.5	12V	B

Circuit A

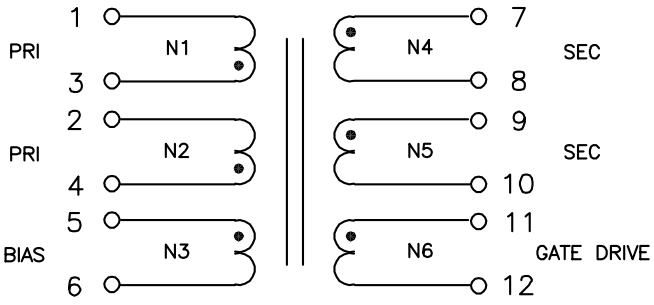

Circuit B

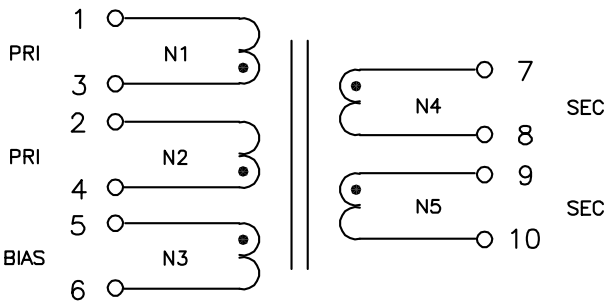

Primary windings (N1 and N2) and Secondary windings (N4 and N5) must be connected in parallel on the customer PCB.

For additional information contact your local representative, or HALO's support staff at (650) 903-3800 or info@haloelectronics.com

30 Watt POE+ Power Transformers

EFD20 Package

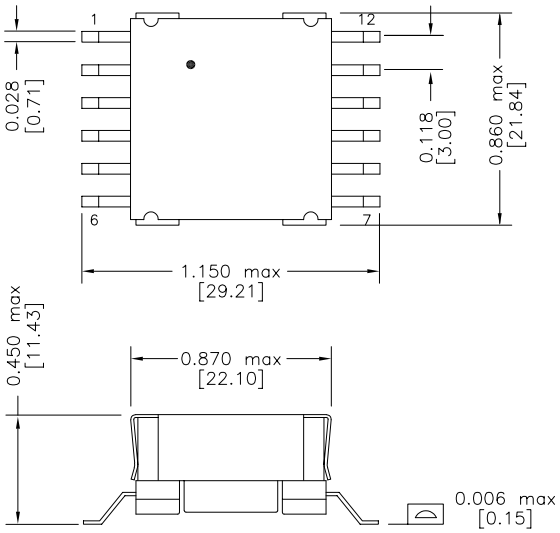

Dimensions: Inch [mm]
Tolerances: 0.006 Inch if not specified

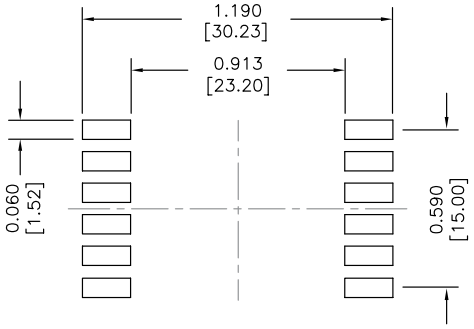

Recommended
Solder Pad Layout

HALO ELECTRONICS, INC.
2880 Lakeside Drive #116
Santa Clara, CA 95054
(650) 903-3800
www.haloelectronics.com

HALO® Electronics is a leading supplier of high quality communication magnetics including signal transformers, filters, CMR chokes, PoE power transformers, DC/DC converters, and integrated Ethernet connectors. HALO's leading edge technology solutions are manufactured in ISO9001 and ISO14001 factories offering high quality products at a competitive price.

© Copyright 2012-2017 HALO Electronics, Inc. All rights reserved.
Revised 03/2017 Download the latest version at www.haloelectronics.com/pdf/30watt-akros.pdf