HAMMOND

Quality Products. Service Excellence.

Toroid Power Transformers - 15 VA to 1500 VA *1182 Series*





Features

- Torodial transformer benefits:
  - low profile
  - lightweight
  - cool running / high efficiency
  - due to the core shape - low stray magnetic flux leakage (low EMI)
- Dual 117/234 VAC primary, 50/60 Hz. operation.
- Note: Units are designed to have all windings engaged (either series or parallel connected) or connected as an autotransformer. Connection sheet included with transformer. *See Product Resources for Download.*
- Supplied with two neoprene rubber insulating pads, one metal centering washer and all mounting hardware (except the 1,500 VA size).
- 1,500 VA size - is supplied with a potted center for extra strength.
- Minimum 8" long flexible leads
- Manufactured using Class B (130 degree C) materials.
- Hi-Pot test of 4,000VAC RMS between primary & secondary
- UL recognized to UL 5085-1 and UL 5085-2, UL file #E207860
- CSA certified to C22.2 #66 - CSA file #209651
- CE compliant to IEC 61558-2-4
- This series replaces our older **182 Toroid Series**.
- **Note about Inrush Current:**
  Due to the superior magnetic properties of Toroidal transformers they will be susceptible to high magnetizing current when initially energized, only limited by the low DC resistance of the primary winding. Depending on where you are in the AC cycle when the transformer is energized dictates the chances of overloading the supply circuit. This is why the transformer may sometimes energize without a problem and other times it will blow the fuse or trip the circuit breaker. The duration of this overload is rarely longer than a half of a cycle. Therefore, you should consider using a slow-blow fuse, time delayed circuit breaker or other form of soft start circuitry for the supply line when using these high efficient Toroidal transformers.

Gallery



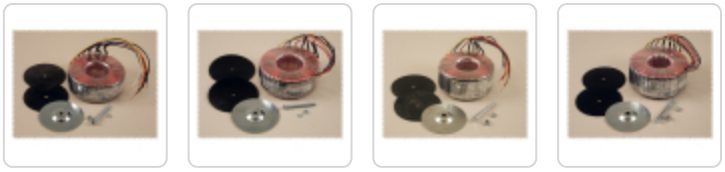

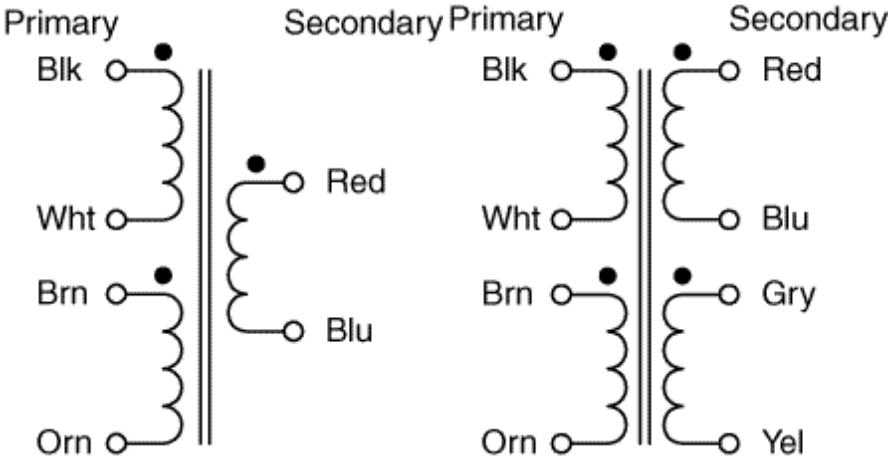

Part No.	VA	VAC Secondary (RMS) Series	VAC Secondary (RMS) Parallel	Dual or Single Secondary	% Voltage Regulation	Toroid Center	Dim. Ref
1182K6	15	12V C.T. @ 1.25A	6V @ 2.5A	Dual	12.41%	Open	A
1182L6	30	12V C.T. @ 2.5A	6V @ 5A	Dual	11.70%	Open	B
1182N6	50	12V C.T. @ 4.17A	6V @ 8.34A	Dual	12.60%	Open	C
1182Q6	80	12V C.T. @ 6.67A	6V @ 13.34A	Dual	9.70%	Open	D
1182H9	15	18V C.T. @ 0.830A	9V @ 1.66A	Dual	11.42%	Open	A
1182K9	30	18V C.T. @ 1.67A	9V @ 3.34A	Dual	12.80%	Open	B
1182M9	50	18V C.T. @ 2.78A	9V @ 5.56A	Dual	13.20%	Open	C
1182N9	80	18V C.T. @ 4.44A	9V @ 8.88A	Dual	10.50%	Open	D
1182Q9	120	18V C.T. @ 6.67A	9V @ 13.34A	Dual	9.00%	Open	E
1182K12	30	24V C.T. @ 1.25A	12V @ 2.5A	Dual	11.70%	Open	B
1182L12	50	24V C.T. @ 2.08A	12V @ 4.16A	Dual	12.60%	Open	C
1182M12	80	24V C.T. @ 3.33A	12V @ 6.66A	Dual	9.70%	Open	D
1182P12	120	24V C.T. @ 5A	12V @ 10A	Dual	7.70%	Open	E
1182Q12	160	24V C.T. @ 6.67A	12V @ 13.34A	Dual	7.70%	Open	F
1182S12	225	24V C.T. @ 9.38A	12V @ 18.76A	Dual	7.20%	Open	G
1182T12	300	24V C.T. @ 12.5A	12V @ 25A	Dual	7.10%	Open	H
1182W12	1000	24V C.T. @ 41.7A	12V @ 83.4A	Dual	2.20%	Open	L-1
1182J15	30	30V C.T. @ 1A	15V @ 2A	Dual	12.30%	Open	B
1182K15	50	30V C.T. @ 1.67A	15V @ 3.34A	Dual	13.00%	Open	C
1182M15	80	30V C.T. @ 2.67A	15V @ 5.34A	Dual	10.20%	Open	D
1182N15	120	30V C.T. @ 4A	15V @ 8A	Dual	8.50%	Open	E
1182P15	160	30V C.T. @ 5.33A	15V @ 10.66A	Dual	7.00%	Open	F
1182H15	225	30V C.T. @ 7.5A	15V @ 15A	Dual	7.20%	Open	G
1182S15	300	30V C.T. @ 10A	15V @ 20A	Dual	5.00%	Open	H
1182F18	15	36V C.T. @ 0.420A	18V @ 0.84A	Dual	11.7%	Open	A
1182H18	30	36V C.T. @ 0.83A	18V @ 1.66A	Dual	12.20%	Open	B
1182J18	50	36V C.T. @ 1.39A	18V @ 2.78A	Dual	13.80%	Open	C
1182L18	80	36V C.T. @ 2.22A	18V @ 4.44A	Dual	10.50%	Open	D
1182M18	120	36V C.T. @ 3.33A	18V @ 6.66A	Dual	7.70%	Open	E
1182N18	160	36V C.T. @ 4.44A	18V @ 8.88A	Dual	7.70%	Open	F
1182G18	225	36V C.T. @ 6.25A	18V @ 12.5A	Dual	7.30%	Open	G
1182G22	30	44V C.T. @ 0.68A	22V @ 1.36A	Dual	12.60%	Open	B
1182J22	50	44V C.T. @ 1.14A	22V @ 2.28A	Dual	14.20%	Open	C

Part No.	VA	VAC Secondary (RMS) Series	VAC Secondary (RMS) Parallel	Dual or Single Secondary	% Voltage Regulation	Toroid Center	Dim. Ref
1182L22	80	44V C.T. @ 1.82A	22V @ 3.64A	Dual	10.40%	Open	D
1182M22	120	44V C.T. @ 2.73A	22V @ 5.46A	Dual	8.40%	Open	E
1182N22	160	44V C.T. @ 3.64A	22V @ 7.28A	Dual	8.40%	Open	F
1182P22	225	44V C.T. @ 5.11A	22V @ 10.22A	Dual	6.40%	Open	G
1182S24	500	48V C.T. @ 10.42A	24V @ 20.82A	Dual	5.10%	Open	I
1182T24	625	48V C.T. @ 13.02A	24V @ 26.04A	Dual	3.30%	Open	J
1182U24	750	48V C.T. @ 15.63A	24V @ 31.26A	Dual	3.60%	Open	L
1182V24	1000	48V C.T. @ 20.8A	24V @ 41.7A	Dual	2.20%	Open	L
1182K30	80	60V C.T. @ 1.33A	30V @ 2.66A	Dual	9.70%	Open	D
1182L30	120	60V C.T. @ 2A	30V @ 4A	Dual	7.70%	Open	E
1182M30	160	60V C.T. @ 2.67A	30V @ 5.34A	Dual	7.70%	Open	F
1182F30	225	60V C.T. @ 3.75A	30V @ 7.5A	Dual	6.30%	Open	G
1182P30	300	60V C.T. @ 5A	30V @ 10A	Dual	6.10%	Open	H
1182R30	500	60V C.T. @ 8.33A	30V @ 16.66A	Dual	4.80%	Open	I
1182S30	625	60V C.T. @ 10.42A	30V @ 20.84A	Dual	4.10%	Open	J
1182T30	750	60V C.T. @ 12.5A	30V @ 25A	Dual	3.10%	Open	K
1182T30P	750	60V C.T. @ 12.5A	30V @ 25A	Dual	3.10%	Potted	K
1182T60	1500	120V C.T. @ 12.50A	60V @ 25A	Dual	2.91%	Open	M
1182U30	1000	60V C.T. @ 16.7A	30V @ 33.3A	Dual	2.20%	Open	L
1182V40P	1500	80V C.T. @ 18.8A	40V @ 37.5A	Dual	3.70%	Potted	M

Part No.	VA	VAC Secondary (RMS) Series	VAC Secondary (RMS) Parallel	Dual or Single Secondary	% Voltage Regulation	Toroid Center	Dim. Ref
1182L60	300	120V C.T. @ 2.5A	60V @ 5A	Dual	6.10%	Open	H
1182N60	500	120V C.T. @ 4.17A	60V @ 8.34A	Dual	4.80%	Open	I
1182P60	625	120V C.T. @ 5.21A	60V @ 10.42A	Dual	4.10%	Open	J
1182Q60	750	120V C.T. @ 6.25A	60V @ 12.5A	Dual	4.10%	Open	K
1182R60	1000	120V C.T. @ 8.3A	60V @ 16.7A	Dual	2.80%	Open	L
1182T60P	1500	120V C.T. @ 12.5A	60V @ 25A	Dual	3.00%	Potted	M
1182L90	225	180V C.T. @ 1.25A	90V @ 2.5A	Dual		Open	
1182D110	15	220V C.T. @ 0.068A	110V @ 0.136A	Dual	11.9%	Open	A
1182E110	30	220V C.T. @ 136ma	110V @ 272ma	Dual	13.10%	Open	B
1182G110	50	220V C.T. @ 227ma	110V @ 454ma	Dual	14.10%	Open	C
1182H110	80	220V C.T. @ 364ma	110V @ 728ma	Dual	10.50%	Open	D
1182J110	120	220V C.T. @ 545ma	110V @ 1.09A	Dual	8.40%	Open	E
1182K110	160	220V C.T. @ 727ma	110V @ 1.45A	Dual	8.00%	Open	F
1182L110	225	220V C.T. @ 1.02A	110V @ 2.04A	Dual	6.10%	Open	G
1182M110	300	220V C.T. @ 1.36A	110V @ 2.72A	Dual	6.10%	Open	H
1182P110	500	220V C.T. @ 2.27A	110V @ 4.54A	Dual	4.70%	Open	I
1182Q110	625	220V C.T. @ 2.84A	110V @ 5.68A	Dual	3.70%	Open	J
1182R110	750	220V C.T. @ 3.41A	110V @ 6.82A	Dual	3.10%	Open	K
1182S110	1000	220V C.T. @ 4.5A	110V @ 9.1A	Dual	3.20%	Open	L
1182U110P	1500	220V C.T. @ 6.8A	110V @ 13.6A	Dual	1.90%	Potted	M
1182E117	30	234V C.T. @ 128ma	117V @ 256ma	Dual	12.40%	Open	B
1182G117	50	234V C.T. @ 214ma	117V @ 428ma	Dual	13.40%	Open	C
1182H117	80	234V C.T. @ 342ma	117V @ 684ma	Dual	10.00%	Open	D
1182J117	120	234V C.T. @ 513ma	117V @ 1.02A	Dual	8.00%	Open	E
1182K117	160	234V C.T. @ 684ma	117V @ 1.37A	Dual	7.60%	Open	F
1182L117	225	234V C.T. @ 0.96A	117V @ 1.92A	Dual	6.00%	Open	G
1182M117	300	234V C.T. @ 1.28A	117V @ 2.56A	Dual	5.80%	Open	H
1182N117	500	234V C.T. @ 2.14A	117V @ 4.28A	Dual	4.70%	Open	I
1182P117	625	234V C.T. @ 2.67A	117V @ 5.34A	Dual	3.80%	Open	J
1182Q117	750	234V C.T. @ 3.21A	117V @ 6.42A	Dual	3.60%	Open	K
1182R117	1000	234V C.T. @ 4.27A	117V @ 8.5A	Dual	3.00%	Open	L
1182R117P	1000	234V C.T. @ 4.27A	117V @ 8.5A	Dual	3.00%	Potted	L
1182T117P	1500	234V C.T. @ 6.4A	117V @ 12.8A	Dual	2.10%	Potted	M

Part No.	VA	VAC Secondary (RMS) Series	VAC Secondary (RMS) Parallel	Dual or Single Secondary	% Voltage Regulation	Toroid Center	Dim. Ref
1182D240	30	-	240V @ 125ma	Single	12.30%	Open	B
1182E240	50	-	240V @ 208ma	Single	13.10%	Open	C
1182F240	80	-	240V @ 333ma	Single	9.90%	Open	D
1182G240	120	-	240V @ 0.5A	Single	7.90%	Open	E
1182H240	160	-	240V @ 667ma	Single	7.70%	Open	F
1182J240	225	-	240V @ 0.94A	Single	5.80%	Open	G
1182K240	300	-	240V @ 1.25A	Single	5.80%	Open	H
1182L240	500	-	240V @ 2.08A	Single	4.80%	Open	I
1182M240	625	-	240V @ 2.6A	Single	3.70%	Open	J
1182N240	750	-	240V @ 3.13A	Single	3.60%	Open	K
1182P240	1000	-	240V @ 4.17A	Single	2.80%	Open	L
1182Q240	1500	-	240V @ 6.3A	Single	2.30%	Open	M
1182Q240P	1500	-	240V @ 6.3A	Single	2.30%	Potted	M

Mechanical & Schematic Data

Dimension Reference	VA Size	Outside Diameter	Height	Inside Diameter	Potted Center	Included Mounting Hardware	Weight (lbs.)	Weight (kg.)
A	15	2.65	1.20	1.25	No	10-24 x 1.75" bolt, with metal centering washer, nut, lockwasher & two (2) rubber insulating pads	0.75	0.35
B	30	3.00	1.40	1.50	No	10-24 x 1.75" bolt, with metal centering washer, nut, lockwasher & two (2) rubber insulating pads	1.1	0.5
C	50	3.25	1.50	1.25	No	10-24 x 2.00" bolt, with metal centering washer, nut, lockwasher & two (2) rubber insulating pads	1.5	0.7
D	80	3.50	1.50	1.60	No	10-24 x 2.00" bolt, with metal centering washer, nut, lockwasher & two (2) rubber insulating pads	2.1	1
E	120	4.00	1.63	1.45	No	10-24 x 2.00" bolt, with metal centering washer, nut, lockwasher & two (2) rubber insulating pads	3	1.3
F	160	4.25	1.75	1.70	No	1/4-20 x 2.50" bolt, with metal centering washer, nut, lockwasher & two (2) rubber insulating pads	3.8	1.7
G	225	4.50	2.00	1.62	No	1/4-20 x 2.50" bolt, with metal centering washer, nut, lockwasher & two (2) rubber insulating pads	4.7	2.1
H	300	5.00	2.00	1.85	No	1/4-20 x 2.50" bolt, with metal centering washer, nut, lockwasher & two (2) rubber insulating pads	6	2.7
I	500	5.50	2.25	2.30	No	1/4-20 x 3.00" bolt, with metal centering washer, nut, lockwasher & two (2) rubber insulating pads	9	4.1
J	625	5.88	2.38	2.45	No	1/4-20 x 3.00" bolt, with metal centering washer, nut, lockwasher & two (2) rubber insulating pads	10.8	4.9
K	750	5.88	2.88	2.45	No	3/8-16 x 3.50" bolt, with metal centering washer, nut, lockwasher & two (2) rubber insulating pads	12.9	5.8
L	1000	6.25	2.88	2.35	No	3/8-16 x 3.50" bolt, with metal centering washer, nut, lockwasher & two (2) rubber insulating pads	16.3	7.4
L-1	1000	6.85	3.40	2	No	3/8-16 x 3.50" bolt, with metal centering washer, nut, lockwasher & two (2) rubber insulating pads	16.3	7.4
M	1500	7.25	3.25	Potted	Yes	3/8-16 x 3.50" bolt, with nut, lockwasher & one (1) rubber bottom insulating pad	23.2	10.5
N	1500	7.40	3.50	2	No	3/8-16 x 3.50" bolt, with metal centering washer, nut, lockwasher & two (2) rubber insulating pads	24.75	11.2

Additional Hardware Kits:

Part No.	Additional Hardware Kit (included with transformers) For Use With	Metal Washer Steel Diameter	Metal Washer Steel Gauge	Rubber Washer Diameter	Rubber Washer Thickness
1182KIT30	30VA Models	10-24 x 1.75" bolt, with metal centering washer, nut, lockwasher & two (2) rubber insulating pads	2.37	18	2.50	0.06
1182KIT50	50VA, 80VA & 120VA Models	10-24 x 2.00" bolt, with metal centering washer, nut, lockwasher & two (2) rubber insulating pads	2.37	18	2.50	0.06
1182KIT160	160VA, 225VA & 300VA Models	1/4-20 x 2.50" bolt, with metal centering washer, nut, lockwasher & two (2) rubber insulating pads	3.56	16	3.75	0.06
1182KIT500	500VA & 625VA Models	1/4-20 x 3.00" bolt, with metal centering washer, nut, lockwasher & two (2) rubber insulating pads	4.30	16	4.75	0.09
1182KIT750	750VA & 1,000VA Models	3/8-16 x 3.50" bolt, with metal centering washer, nut, lockwasher & two (2) rubber insulating pads	4.30	16	4.75	0.09
1182KIT1500P	1,500VA Models	3/8-16 x 4.00" bolt, nut & lockwasher	N/A		N/A	
1182KIT1500	Heavy Duty - Upgrade Kit 1,500VA Models	3/8-16 x 4.50" bolt, with metal centering washer, nut, lockwasher & two (2) rubber insulating pads	4.30	16	6.00	0.12

Tags: **power transformer**, **toroid**, **toroidal**, **hi-pot**, **dual secondary**, **single secondary**

Data subject to change without notice

© 2024. Hammond Manufacturing Ltd. All rights reserved.