HAMMOND

Quality Products. Service Excellence.

Tube Driver - Interstage *126 Series*







Classic

RoHS

Features

- Designed for driver use ONLY in single ended tube output amplifiers. These units replace coupling capacitor circuits for improved sound.
- Closed style with minimum 8" long leads.
- All models use bifilar wound windings for exceptional coupling and bandwidth.
- Minimum frequency response 20 Hz. - 20 Khz (+/- 1db max. ref. 1 Khz.).
- The core is gapped to support the specified D.C. bias current.
- Maximum working voltage - 400 VDC
- Units are Hi-Pot tested at 1,000 VDC
- Core uses Hi grade silicon laminations (29M6).
- Units weight - 3 lbs. 2 oz.

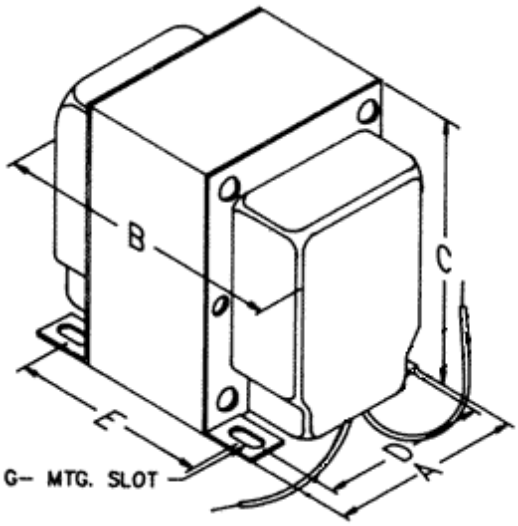

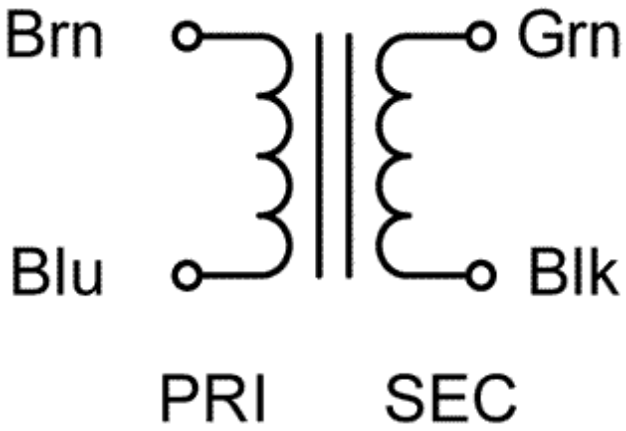

		Primary		Secondary				Dimensions						
	Audio	Impedance	D.C. Resistance	Impedance	D.C. Resistance		Rated D.C.						G	
Part No.	Watts	(Ohms)	(Ohms)	(Ohms)	(Ohms)	Inductance	Bias Current	A	B	C	D	E	Mtg Slot	
126A	4	5K	178	5K	178	59 Henrys	15 ma.	2.50	3.12	3.12	2.00	2.25	0.20	0.38
126B	4	5K	178	5K	178	44 Henries	30 ma.	2.50	3.12	3.12	2.00	2.25	0.20	0.38
126C	4	10K	375	10K	375	106 Henrys	15 ma.	2.50	3.12	3.12	2.00	2.25	0.20	0.38

Tags: **audio transformer**, **interstage**, **tube driver**, **single ended**, **output**

Data subject to change without notice

© 2024. Hammond Manufacturing Ltd. All rights reserved.