HAMMOND

Quality Products. Service Excellence.

Tube Output (10 - 280 Watts) *1608-1650 Series*

Push-Pull - HI-FI







RoHS

Features

- Please see our NEW & improved versions (**easy wire secondary series**).
- Designed for push-pull tube output circuits.
- Enclosed (shielded), 4 slot, above chassis Type "X" mounting.
- Frequency response 30 Hz. to 30 Khz. at full rated power (+/- 1 db max. - ref. 1 Khz) minimum.
- Insulated flexible leads 8" min.
- Manufactured with plastic coil forms for coil support and insulation.
- Typical applications - Push-Pull: triode, Ultra-Linear pentode, pentode and tetrode connected audio output.
- Due to the unique interleaving of the windings BOTH secondary windings must be engaged to meet specifications (see hook-up diagrams below).
- For the "ultimate" in Push-Pull output see our line of **epoxy potted output transformers**

1645 Only

- **Secondary Connections** (Due to the unique interleaving of the windings **BOTH** secondary windings must be engaged to meet specifications)
- To hook up 4/8/16 ohm secondary loads - see schematic (do not use the white wire).
- To hook up secondary to 70V loads, jumper Blk/Yel wire to Grn wire. Connect load to Blk and White wires.

Gallery



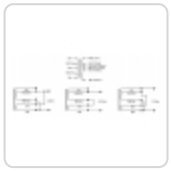



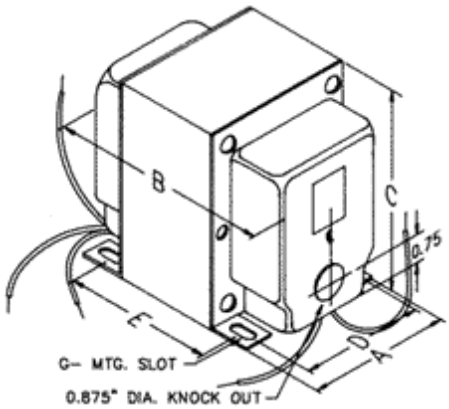

Part No.	Audio Watts (RMS)	Primary Impedance (Ohms)	Maximum DC Per Side	Secondary Impedance (Ohms)	Dimensions A	B	C	D	E +/- 1/16"	G Slot	Weight (lbs.)
1608	10	8,000 ct	100 ma.	4-8-16	2.50	2.75	3.06	2.00	1.69	0.20 x 0.38	2.5
1609	10	10,000 ct	100 ma.	4-8-16	2.50	2.75	3.06	2.00	1.69	0.20 x 0.38	2.5
1615	15	5,000 ct	100 ma.	4-8-16	2.50	3.25	3.06	2.00	2.19	0.20 x 0.38	3.25
1620	20	6,600 ct	158 ma.	4-8-16	2.50	3.50	3.06	2.00	2.44	0.20 x 0.38	3.5
1650F	25	7,600 ct	128 ma.	4-8-16	2.50	3.50	3.06	2.00	2.44	0.20 x 0.38	4
1645	30	5,000 ct	128 ma.	4-8-16-70V	2.50	3.75	3.06	2.00	2.69	0.20 x 0.38	4.5
1650H	40	6,600 ct	200 ma.	4-8-16	3.13	4.00	3.81	2.50	2.69	0.20 x 0.38	6.5
1650K	50	3,400 ct	318 ma.	4-8-16	3.13	4.00	3.81	2.50	2.69	0.20 x 0.38	7
1650M	60	1,400CT/800CT	318 ma.	4-8-16	3.13	4.19	3.80	2.50	2.94	0.20 x 0.38`	7.5
1650N	60	4,300 ct	318 ma.	4-8-16	3.13	4.25	3.81	2.50	2.94	0.20 x 0.38	8
1650P	60	6,600 ct	200 ma.	4-8-16	3.13	4.25	3.81	2.50	2.94	0.20 x 0.38	8
1650R	100	5,000 ct	318 ma.	4-8-16	3.75	4.25	4.56	3.00	3.06	0.20 x 0.38	12
1650T	120	1,900 ct	403 ma.	4-8-16	3.75	4.50	4.56	3.00	3.31	0.20 x 0.38	14
1650W	280	1,900 ct	806 ma.	4-8-16	4.38	7.50	5.25	3.50	5.88	0.20 x 0.38	28

Suggested Tube Types

Part No.	Audio Watts (R.M.S.)	Primary Impedance (Ohms)	Operation	Suggested Tube Types
1608	10	8,000 ct	Push-Pull (2 Tubes)	6AQ5, 6V6, 6BQ5, EL84, SV83
1609	10	10,000 ct	Push-Pull (2 Tubes)	6AQ5, 6V6, 6BQ5, EL84, SV83
1615	15	5,000 ct	Push-Pull (2 Tubes)	2A3, 6A3, 6AQ5, 6B4G, 6L6, 6V6
1620	20	6,600 ct	Push-Pull (2 Tubes)	6AQ5, 6L6, 6V6
1650F	25	7,600 ct	Push-Pull (2 Tubes)	6L6GC, 6V6, 807, 5881, EL34
1645	30	5,000 ct	Push-Pull (2 Tubes)	6L6GC, 6V6, 807, 5881, EL34
1650H	40	6,600 ct	Push-Pull (2 Tubes)	6L6GC, 807, 5881, EL34
1650K	50	3,400 ct	Push-Pull Par. (4 Tubes)	6L6GC, 807, 5881, EL34, 6146B, 6550B
1650N	60	4,300 ct	Push-Pull Par. (2 or 4 Tubes)	6L6GC, 807, 5881, EL34, 6146B, 6550B, KT88
1650P	60	6,600 ct	Push-Pull (2 Tubes)	6L6GC, 807, 5881, EL34, 6146B, 6550B, KT88
1650R	100	5,000 ct	Push-Pull Par. (2 or 4 Tubes)	807, 5881, EL34, 6146B, 6550B, KT88
1650T	120	1,900 ct	Push-Pull Par. (4 or 6 Tubes)	6L6GC, 5881, EL34, 6550B, KT88
1650W	280	1,900 ct	Push-Pull Par. (6 or 8 Tubes)	6L6GC, 5881, EL34, 6550B, KT88

Notes: The above examples of possible combinations are to help you narrow down the choices of transformers for your favorite tube types. How you operate the tubes (push-pull, push-pull parallel, ultra-linear, class, B+, bias, operating points, etc.) will change optimum plate to plate load impedance. Only a few of the most popular tubes are shown. As more tubes become available we will add them to the list. A tube manual or tube manufacturer's technical data sheets should be consulted first, before making a decision on a proper output transformer.

Tags: **classic transformer**, **push-pull**, **tube output**, **triode**, **pentode**, **tetrode**, **output circuit**

Data subject to change without notice

© 2024. Hammond Manufacturing Ltd. All rights reserved.